SFP-10GB-BXD32-40-V-AO

MSA Compliant 10GBase-BX SFP+ Transceiver (SMF, 1330nmTx/1270nmRx, 40km, LC, DOM, -40 to 95C)

Features:

- Low Power Dissipation
- Compliant with SFP MSA, SFF 8431 Rev. 4.1
- Compliant with IEEE 802.3ae 10GBASE-E
- Metal Package for Lower EMI
- Up to 11.3Gbps 10km Data Links
- LC Connector
- Operating Temperature: -40 to 95 Celsius
- Single 3.3V Power Supply Voltage
- Excellent ESD Protection
- RoHS Compliant and Lead-Free
- RoHS Compliant and Lead Free

Applications:

- 8x/10x Fibre Channel
- 10GBase-BX Ethernet
- Access, Metro and Enterprise

Product Description

This MSA compliant SFP+ transceiver provides 10GBase-BX throughput up to 40km over single-mode fiber (SMF) using a wavelength of 1330nmTx/1270nmRx via an LC connector. This bidirectional unit must be used with another transceiver or network appliance of complementing wavelengths. It can operate at temperatures between -40 and 95C. All of our transceivers are built to comply with Multi-Source Agreement (MSA) standards and are uniquely serialized and tested for data-traffic and application to ensure seamless network integration. Additional product features include Digital Optical Monitoring (DOM) support which allows access to real-time operating parameters. We stand behind the quality of our products and proudly offer a limited lifetime warranty.

AddOn's transceivers are RoHS compliant and lead-free.

Absolute Maximum Ratings

Parameter	Symbol	Min.	Typ.	Max.	Unit	Notes
Maximum Supply Voltage	Vcc	0		4	V	
Storage Temperature	Tstg	-40		85	°C	
Operating Case Temperature	Tc	-40		95	°C	
Data Rate	DR	9.9	10.3	11.3	Gbps	

Notes:

1. Measured on the top side front center of the SFP module.

Electrical Characteristics

Parameter	Symbol	Min.	Typ.	Max.	Unit	Notes
Power Supply Voltage	Vcc	3.135	3.3	3.465	V	
Power Supply Current	Icc			450	mA	
Transmitter						
Differential Input Impedance	RIN	80	100	120	Ω	
Differential Data Input Swing	VIN,pp	180		800	mVp-p	
Data Input Rise/Fall Time	Tr/Tf	15		40	ps	
Tx_Disable Voltage	VD	2.0		Vcc+0.3	V	1
Tx_Enable Voltage	VEN	-0.3		0.8	V	
Tx_Disable Assert Time	t_off			100	µs	
Tx_Enable Assert Time	t_on			2	ms	
Tx_Fault Assert Time for Cooled Module	tx_f_on			50	ms	
Tx_Fault Reset Time	t_reset	10			µs	2
Initialization Time for Cooled Module	t_start_up			90	s	
Receiver						
Differential Output Impedance	ROUT	80	100	120	Ω	
Differential Data Output Swing	VOUT	300		800	mVp-p	
Data Output Rise/Fall Time (20-80%)	Tr/Tf			45	ps	
LOS Output High Voltage	Vlosh	Vcc-0.5		Vcc+0.3	V	1
LOS Output Low Voltage	Vlosl	0		0.4	V	
LOS Assert/De-Assert Time Delay	T_los on/off			100/100	µs/µs	

Notes:

1. Vcc is the voltage of the host board.
2. Time Tx_Disable must be held “high” to reset the Tx_Fault.

Optical Characteristics

Parameter	Symbol	Min.	Typ.	Max.	Unit	Notes
Transmitter						
Optical Center Wavelength	λC	1320	1330	1340	nm	
Average Optical Power	P_{avg}	0		5	dBm	1
Extinction Ratio	ER	3.5			dB	
Spectral Width @-20dB	Δλ-20dB			1.0	nm	
Side-Mode Suppression Ratio	SMSR	30			dB	
Optical Power of Off Transmitter	Poff			-30	dBm	
Relative Intensity Noise	$RIN_{12}OMA$			-128	dB/Hz	
Optical Return Loss Tolerance				12	dB	
Transmitter Reflectance				-12	dB	
Transmitter and Dispersion Penalty	TDP			3.2	dB	
Transmitter Eye Mask Definition	{X1, X2, X3, Y1, Y2, Y3} = {0.25, 0.40, 0.45, 0.25, 0.28, 0.40}					
Receiver						
Optical Center Wavelength	λC	1260	1270	1280	nm	
Average Rx Sensitivity @10Gbps	RSENS			-18	dBm	2
Maximum Input Power	Pol	-7			dBm	
Receiver Reflectance				-12	dB	
LOS Assert	LOSA	-35			dBm	
LOS De-Assert	LOSD			-18	dBm	
LOS Hysteresis		0.5	2.5	5	dB	

Notes:

1. The maximum Tx POUT is the lesser of the Class 1 eye safety limit and a maximum receiver input power level of 0dBm.
2. Measured with a PRBS of 2^{31}-1 at $1x10^{-12}$ BER and 3.5dB extinction ratio @10.3Gbps 12dB reflection.

Pin Descriptions

Pin	Logic	Symbol	Name/Description	Plug Sequence	Notes
1		GND	Transmitter Ground.	1	1
2	LVTTL-O	Tx_Fault	Transmitter Fault Indication.	3	2
3	LVTTL-I	Tx_Disable	Transmitter Disable.	3	3
4	LVTTL-I/O	SDA	2-Wire Serial Interface Data.	3	4
5	LVTTL-I/O	SCL	2-Wire Serial Interface Clock.	3	4
6		MOD_ABS	Module Absent. Connected to the module GND.	3	5
7	LVTTL-I	RS0	Rate Select 0. Not Implemented.	3	6
8	LVTTL-O	Rx_LOS	Receiver Loss of Signal Indication. In FC, designated as Rx_LOS. In Ethernet, designated as Signal Detect Bar.	3	7
9	LVTTL-I	RS1	Rate Select 1. Not Implemented.	3	6
10		GND	Receiver Ground.	1	1
11		GND	Receiver Ground.	1	1
12	CML-O	RD-	Receiver Negative Data Out.	3	
13	CML-O	RD+	Receiver Positive Data Out.	3	
14		GND	Receiver Ground.	1	1
15		VccRx	3.3V±5% Receiver Power.	2	
16		VccTx	3.3V±5% Transmitter Power.	2	
17		GND	Transmitter Ground.	1	1
18	CML-I	TD+	Transmitter Positive Data In.	3	
19	CML-I	TD-	Transmitter Negative Data In.	3	
20		GND	Transmitter Ground.	1	1

Notes:

1. The module ground contacts shall be isolated from the module case.
2. Tx_Fault is an open collector/drain output that shall be pulled up with a 4.7kΩ to 10kΩ on the host board. Pull-up voltage between 2.0V and VccT+0.5V. When “high,” output indicates a laser fault of some kind. When “low,” output indicates normal operation. The LD output is not turned off in case of Tx_Fault.
3. Tx_Disable is an input that is used to shut down the transmitter optical output. It is pulled up within the TRx with 4.7kΩ to 10kΩ to the VccT.
4. SDA and SCL should be pulled up with a 4.7kΩ to 10kΩ on the host board. The pull-up voltage shall be VccT. SCL is the clock line of the 2-wire serial interface for serial ID. SDA is the data line of the 2-wire serial interface for serial ID.
5. MOD_ABS is connected to the module ground. The host may pull the contact up to the Vcc on the host board with a resistor in the range 4.7kΩ to 10kΩ. MOD_ABS is asserted “high” when the SFP+ module is physically absent from a host slot. In the SFP MSA (INF-8074i), this contact has the same function but is called MOD_DEF0.

6. RS0 and RS1 are module input rate select contacts but are not used. Both are pulled “low” to the module ground with a >30kΩ resistor in the module.
7. LOS is an open collector output and shall be pulled up with a 4.7kΩ to 10kΩ on the host board. Pull-up voltage between 2.0 and VccR+0.3. “Logic 0” indicates normal operation.

Pin Assignments

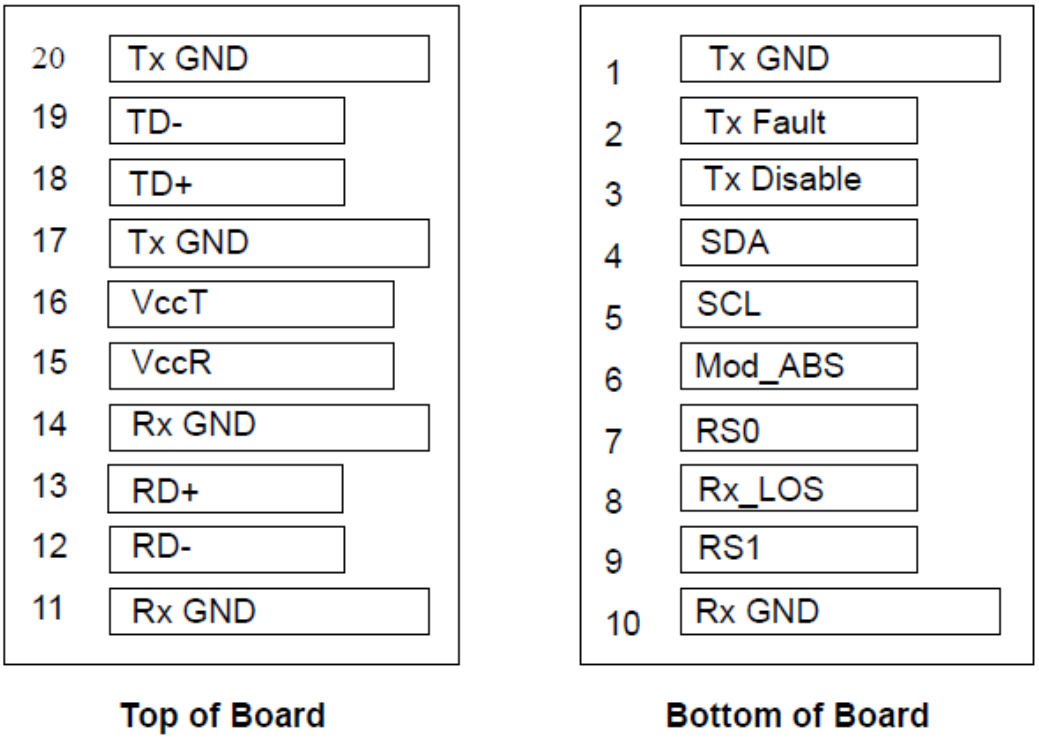

Recommended Host Board Supply Filtering Network

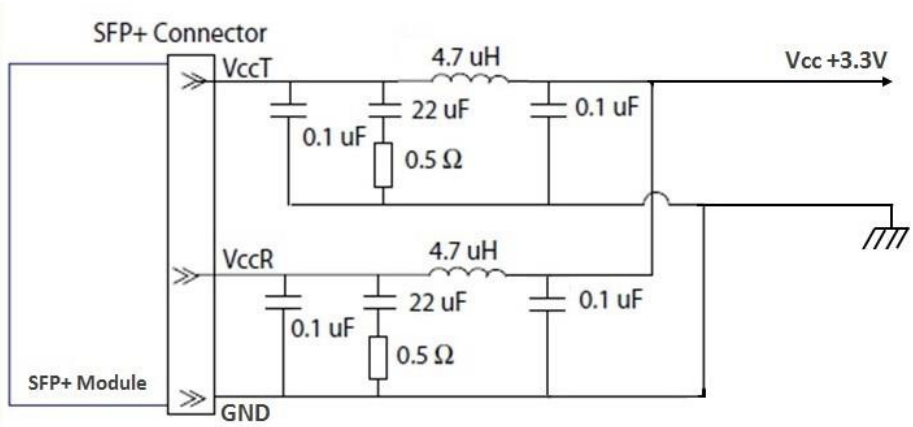

Recommended Host Board Interface

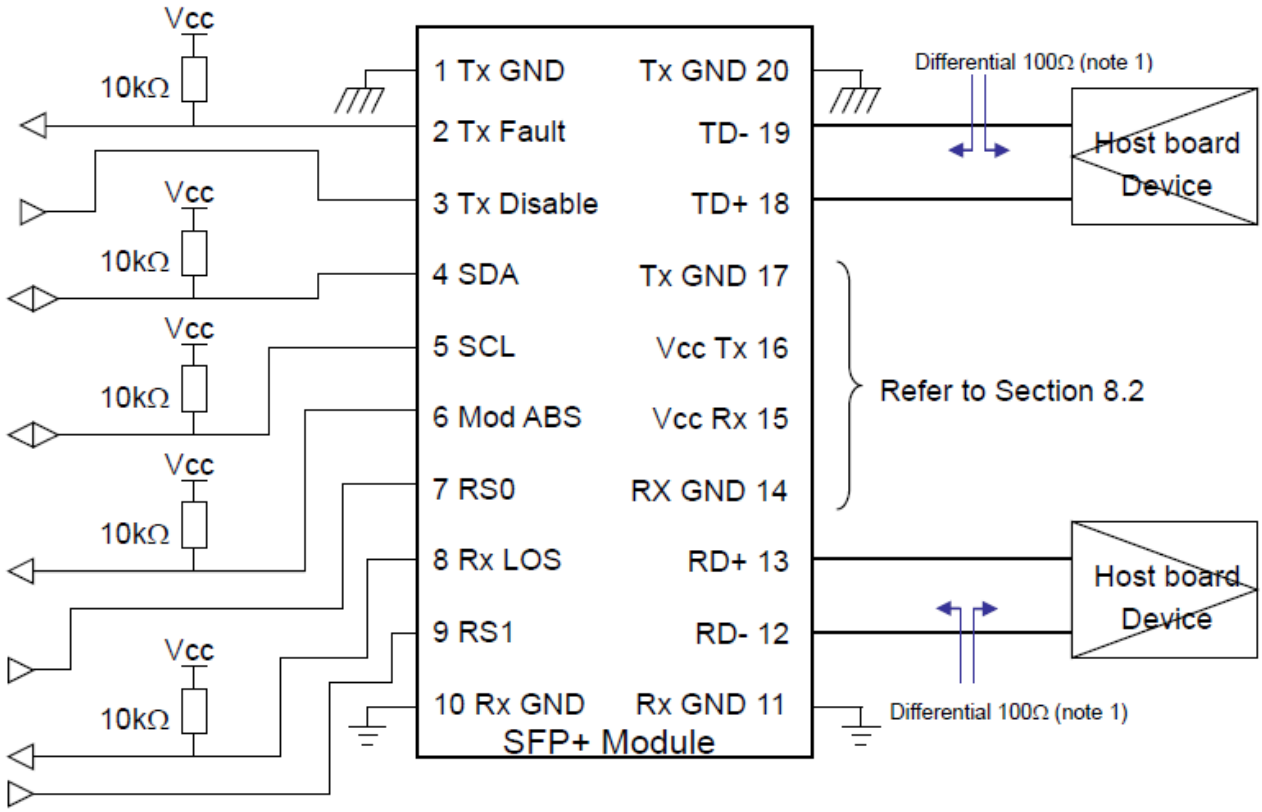

Notes:

1. Host board output device circuit in the transmitter side and host board input device circuit in the receiver should be carefully designed to meet 100Ω differential impedance matching. Also necessary is the DC bias circuit of each input and output by taking into account the AC coupling of data input and output of the SFP+ module.

Block Diagram

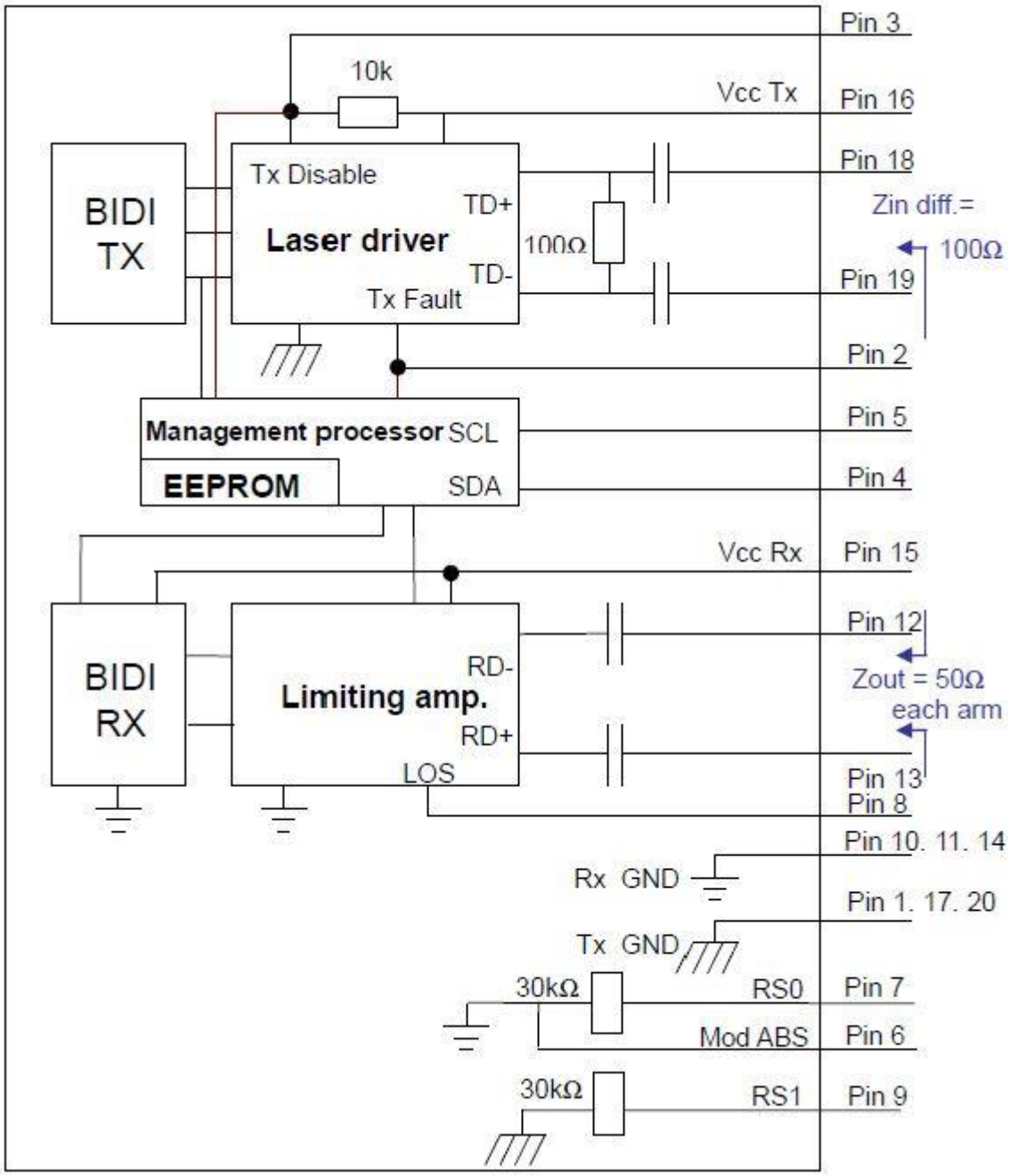

Mechanical Specifications

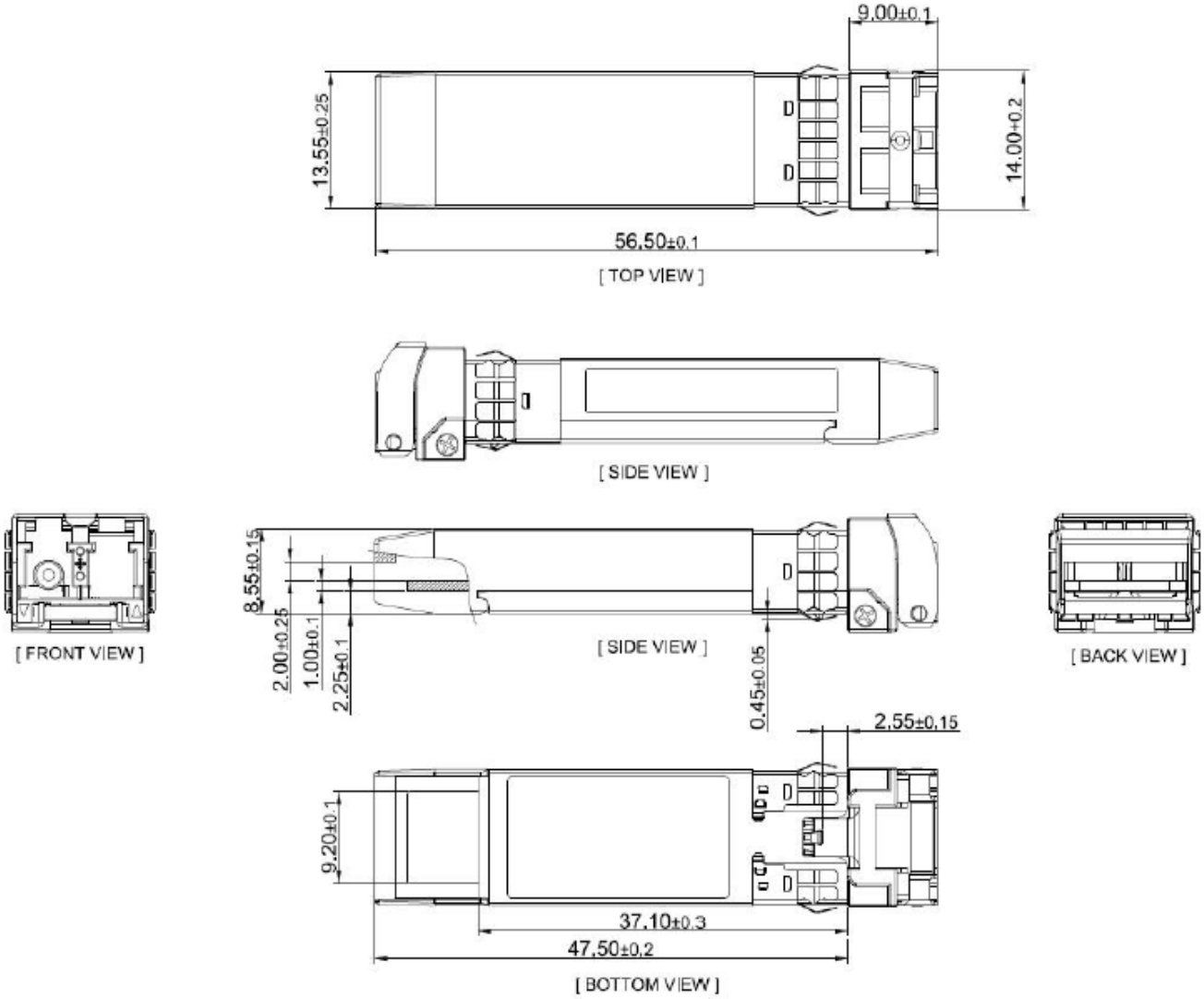

About AddOn Networks

In 1999, AddOn Networks entered the market with a single product. Our founders fulfilled a severe shortage for compatible, cost-effective optical transceivers that compete at the same performance levels as leading OEM manufacturers. Adhering to the idea of redefining service and product quality not previously had in the fiber optic networking industry, AddOn invested resources in solution design, production, fulfillment, and global support.

Combining one of the most extensive and stringent testing processes in the industry, an exceptional free tech support center, and a consistent roll-out of innovative technologies, AddOn has continually set industry standards of quality and reliability throughout its history.

Reliability is the cornerstone of any optical fiber network and is ingrained in AddOn's DNA. It has played a key role in nurturing the long-term relationships developed over the years with customers. AddOn remains committed to exceeding industry standards with certifications ranging from NEBS Level 3 to ISO 9001:2015 with every new development while maintaining the signature reliability of its products.

U.S. Headquarters

Email: sales@addonnetworks.com

Telephone: +1 877.292.1701

Fax: 949.266.9273

Europe Headquarters

Email: salesemea@addonnetworks.com

Telephone: +44 1285 842070