ADD-SALSDE-PDAC3M

Alcatel-Lucent Nokia® SFP-10G-C-3M to Dell® DAC-SFP-10G-3M Compatible TAA 10GBase-CU SFP+ to SFP+ DAC (Passive Twinax, 3m)

Features:

- Up to 10 Gbps bi-directional data links
- Compliant with SFF-8431
- Compliant with 10GFC
- 100 Ohm differential impedance
- Enhanced EMI design
- AC coupled inputs and outputs
- Operating Temperature Range: 0 to 70 Celsius
- Single 3.3V power supply
- RoHS Compliant and Lead-Free



Applications:

- 10GBase Ethernet

Product Description

This Alcatel-Lucent Nokia® to Dell® dual OEM compatible 10GBase-CU SFP+ to SFP+ passive TAA (Trade Acts Agreement) compliant direct attach cable has a maximum reach of 3.0m (9.8ft). It is 100% Alcatel-Lucent Nokia® and Dell® compatible and has been programmed, uniquely serialized, and data-traffic and application tested to ensure that it is compliant and functional. This direct attach cable will initialize and perform identically to Alcatel-Lucent Nokia® and Dell®'s individual cables and is built to meet or exceed Alcatel-Lucent Nokia® and Dell®'s specifications, and comply with MSA (Multi-Source Agreement) standards. We stand behind the quality of our products and proudly offer a limited lifetime warranty.

AddOn's transceivers are RoHS compliant and lead-free.

TAA refers to the Trade Agreements Act (19 U.S.C. & 2501-2581), which is intended to foster fair and open international trade. TAA requires that the U.S. Government may acquire only "U.S.-made or designated country end products."

TAA COMPLIANT

General Specifications

Parameter	Symbol	Min.	Typ.	Max.	Unit	Notes
Data Rate	DR		10.3125		Gbps	1
Bit Error Rate	BER			10^{-12}		
Operating Temperature	Tc	0		70	°C	2
Storage Temperature	Tstg	-40		85	°C	3
Power Supply Voltage	Vcc	3.14	3.30	3.46	V	4

Notes:

1. IEEE 802.3ae.
2. Case Temperature.
3. Ambient Temperature.
4. For the electrical power interface.

Cable Specifications

Parameter	Symbol	Min.	Typ.	Max.	Unit
Wire Gauge			30AWG		AWG
Cable Impedance	Z	90	100	110	Ω
Cable Diameter	OD		4.2		mm
Minimum Bending Radius	R		25		mm
Tolerance Range ±			2		cm

Pin Descriptions

Pin	Symbol	Name/Description	Notes
1	VeeT	Transmitter Ground (Common with Receiver Ground).	1
2	Tx_Fault	Transmitter Failure Alarm. Not Used.	
3	Tx_Disable	Not Used. The signal turns off the module transmitter when it is “high” or “open.”	
4	SDA	Data Line for Serial ID.	2
5	SCL	Clock Line for Serial ID.	2
6	MOD_ABS	Module Absent. Grounded within the module.	2
7	RS0	No Connection Required.	
8	LOS	Loss of Signal Indication. “Logic 0” indicates normal operation.	
9	RS1	No Connection Required.	
10	VeeR	Receiver Ground (Common with Transmitter Ground).	1
11	VeeR	Receiver Ground (Common with Transmitter Ground).	1
12	RD-	Receiver Inverted Data Out. AC Coupled.	
13	RD+	Receiver Non-Inverted Data Out. AC Coupled.	
14	VeeR	Receiver Ground (Common with Transmitter Ground).	1
15	VccR	Receiver Power Supply.	
16	VccT	Transmitter Power Supply.	
17	VeeT	Transmitter Ground (Common with Receiver Ground).	1
18	TD+	Transmitter Non-Inverted Data In. AC Coupled.	
19	TD-	Transmitter Inverted Data In. AC Coupled.	
20	VeeT	Transmitter Ground (Common with Receiver Ground).	1

Notes:

1. The circuit ground is isolated from the chassis ground.
2. Should be pulled up with 4.7kΩ to 10kΩ on the host board to a voltage between 2V and 3.6V.

Electrical Pad Layout

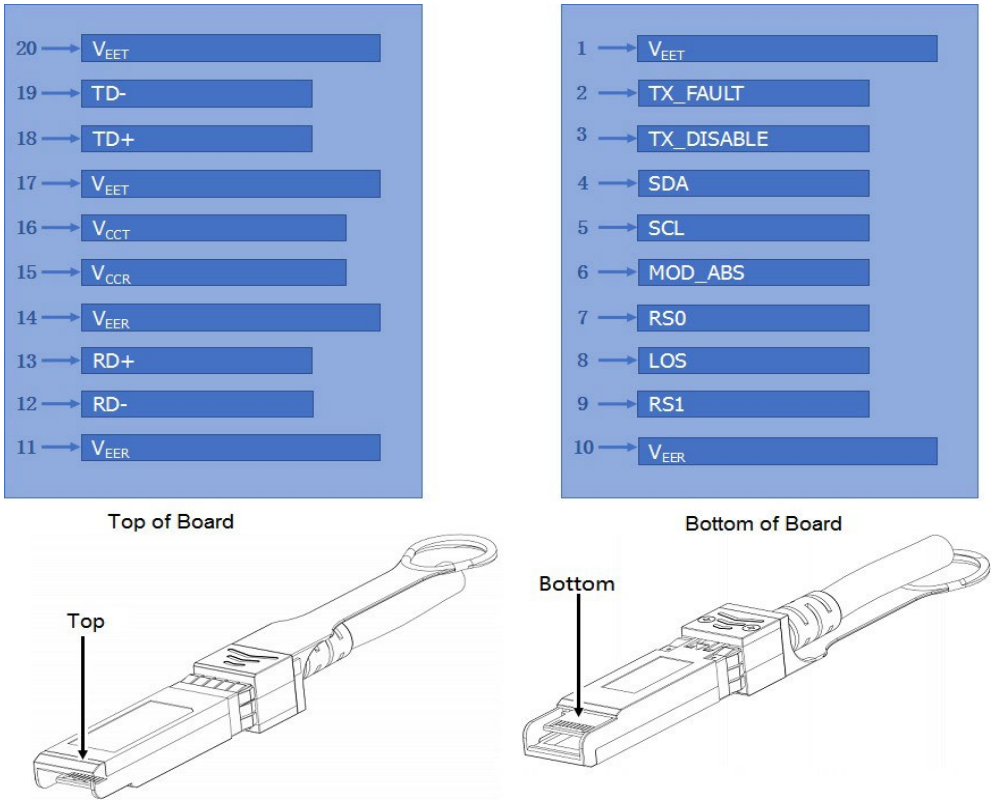

Block Diagram of Transceiver

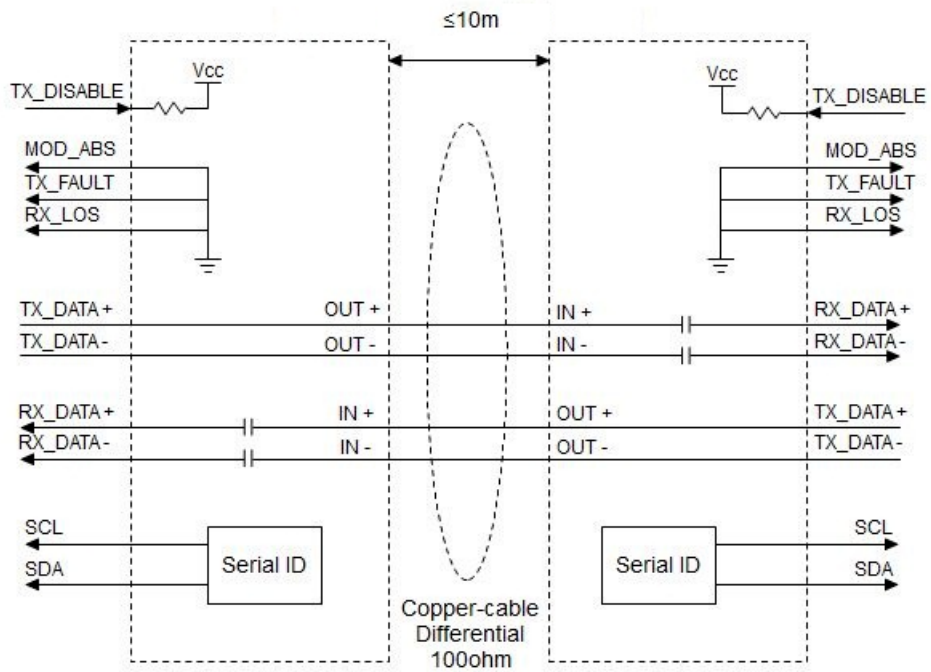

Weight

Parameter	Symbol	Typ.	Unit	Notes
30AWG Product Weight	GD30	72	g/PCS	1
30AWG Cable Weight	GC30	26	g/M	
Dust Cap Weight	GS	0.80	g/PCS	

Notes:

1. For example, the weight of a 6m cable with 30AWG is: 72+26*(6-1) + 0.80*2=203.6g.

Mechanical Specifications

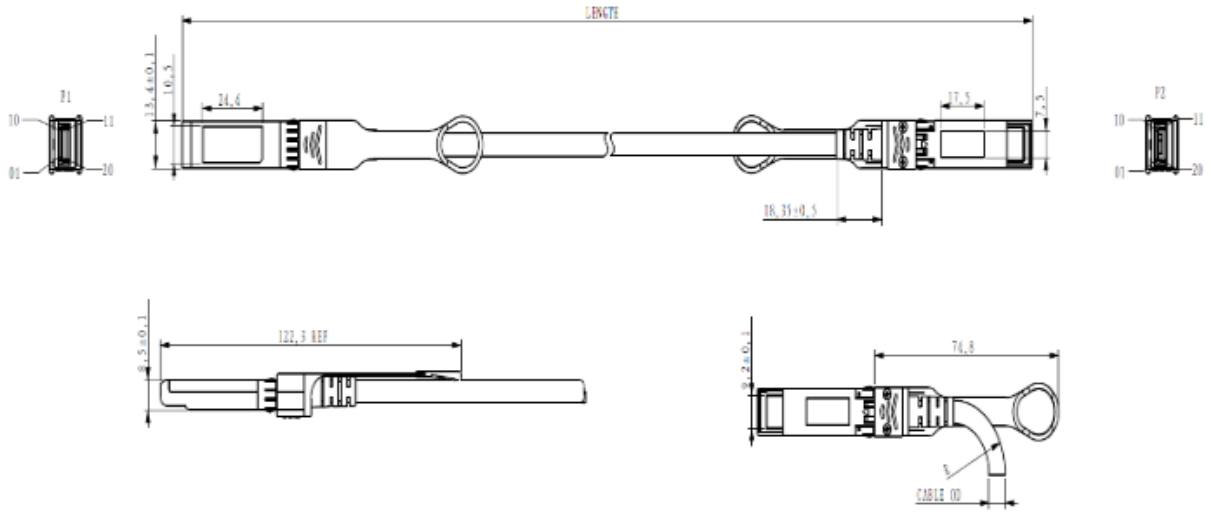

All Dimensions are ±0.2mm Unless Otherwise Specified
Unit: mm

About AddOn Networks

In 1999, AddOn Networks entered the market with a single product. Our founders fulfilled a severe shortage for compatible, cost-effective optical transceivers that compete at the same performance levels as leading OEM manufacturers. Adhering to the idea of redefining service and product quality not previously had in the fiber optic networking industry, AddOn invested resources in solution design, production, fulfillment, and global support.

Combining one of the most extensive and stringent testing processes in the industry, an exceptional free tech support center, and a consistent roll-out of innovative technologies, AddOn has continually set industry standards of quality and reliability throughout its history.

Reliability is the cornerstone of any optical fiber network and is ingrained in AddOn's DNA. It has played a key role in nurturing the long-term relationships developed over the years with customers. AddOn remains committed to exceeding industry standards with certifications ranging from NEBS Level 3 to ISO 9001:2015 with every new development while maintaining the signature reliability of its products.



U.S. Headquarters

Email: sales@addonnetworks.com

Telephone: +1 877.292.1701

Fax: 949.266.9273

Europe Headquarters

Email: salesemea@addonnetworks.com

Telephone: +44 1285 842070