**SFP-10GB-CW-51-LR-AO**

MSA Compliant 10GBase-CWDM SFP+ Transceiver (SMF, 1510nm, 10km, LC, DOM)

**Features:**

- Single 3.3V Power Supply Voltage
- Compliant with IEEE 802.3ae 10GBASE-LR/LW
- CWDM DFB Laser Transmitter
- Single-Mode Fiber
- Hot-Pluggable
- Up to 10.7Gbps Bi-Directional Data Links
- Operating Temperature: 0 to 70 Celsius
- Duplex LC Connector
- Excellent ESD Protection
- RoHS Compliant and Lead-Free
- RoHS Compliant and Lead Free

**Applications:**

- 8x/10x Fibre Channel
- 10x Gigabit Ethernet over CWDM
- Access, Metro and Enterprise
- Mobile Fronthaul CPRI/OBSAI

**Product Description**

This MSA compliant SFP+ transceiver provides 10GBase-CWDM throughput up to 10km over single-mode fiber (SMF) using a wavelength of 1510nm via an LC connector. The listed reach has been determined using a link budget calculation and tested in a standard environment. Actual link distances achieved will be dependent upon the deployed environment. All of our transceivers are built to comply with Multi-Source Agreement (MSA) standards and are uniquely serialized and tested for data-traffic and application to ensure seamless network integration. Additional product features include Digital Optical Monitoring (DOM) support which allows access to real-time operating parameters. We stand behind the quality of our products and proudly offer a limited lifetime warranty.

AddOn's transceivers are RoHS compliant and lead-free.

## CWDM Available Wavelengths

| Wavelengths | Min. | Typ. | Max. |
|---|---|---|---|
| **27** | 1264.5 | 1271 | 1277.5 |
| **29** | 1284.5 | 1291 | 1297.5 |
| **31** | 1304.5 | 1311 | 1317.5 |
| **33** | 1324.5 | 1331 | 1337.5 |
| **35** | 1344.5 | 1351 | 1357.5 |
| **37** | 1364.5 | 1371 | 1377.5 |
| **39** | 1384.5 | 1391 | 1397.5 |
| **41** | 1404.5 | 1411 | 1417.5 |
| **43** | 1424.5 | 1431 | 1437.5 |
| **45** | 1444.5 | 1451 | 1457.5 |
| **47** | 1464.5 | 1471 | 1477.5 |
| **49** | 1484.5 | 1491 | 1497.5 |
| **51** | 1504.5 | 1511 | 1517.5 |
| **53** | 1524.5 | 1531 | 1537.5 |
| **55** | 1544.5 | 1551 | 1557.5 |
| **57** | 1564.5 | 1571 | 1577.5 |
| **59** | 1584.5 | 1591 | 1597.5 |
| **61** | 1604.5 | 1611 | 1617.5 |

## Absolute Maximum Ratings

| Parameter | Symbol | Min. | Typ. | Max. | Unit | Notes |
|---|---|---|---|---|---|---|
| **Maximum Supply Voltage** | Vcc | -0.5 | | 4.0 | V | 1 |
| **Storage Temperature** | Tstg | -40 | | 90 | °C | 2 |
| **Operating Case Temperature** | Tc | 0 | | 70 | °C | 3 |
| **Maximum Bitrate** | BER | | | $10^{-12}$ | | |
| **Data Rate** | DR | | 10.3125 | | Gbps | 4 |

**Notes:**

1. For the electrical power interface.
2. Ambient temperature.
3. Case temperature.

**Electrical Characteristics**

| Parameter | Symbol | Min. | Typ. | Max. | Unit | Notes |
|---|---|---|---|---|---|---|
| **Power Supply Voltage** | Vcc | 3.14 | 3.30 | 3.46 | V | |
| **Power Supply Current** | Icc | | 200 | 310 | mA | 1 |
| **Power Consumption** | PC | | 0.65 | 1.0 | W | |
| **Transmitter** | | | | | | |
| **Differential Data Input Swing** | VIN,pp | 180 | | 700 | mV | |
| **Input Differential Impedance** | RIN | | 100 | | Ω | |
| **Transmit Disable Voltage** | VD | 2 | | Vcc | V | |
| **Transmit Enable Voltage** | VEN | Vee | | Vee+0.8 | V | |
| **Receiver** | | | | | | |
| **Differential Data Output Swing** | VOUT,pp | 300 | | 850 | mV | |
| **Output Differential Impedance** | Tr/Tf | 28 | | | ps | |
| **LOS Assert** | VLOSA | 2 | | Host_Vcc | V | |
| **LOS De-Assert** | VLOSD | Vee | | Vee+0.5 | V | |

**Notes:**

1. For the electrical power interface.

## Optical Characteristics

| Parameter | Symbol | Min. | Typ. | Max. | Unit | Notes |
|---|---|---|---|---|---|---|
| **Transmitter** | | | | | | |
| **Optical Power (Average)** | $P_{TX}$ | 2 | | 7 | dBm | 1 |
| **Transmitter Dispersion Penalty** | TDP | | | 4 | dB | |
| **Optical Extinction Ratio** | ER | 3.5 | | | dB | |
| **Optical Wavelength** | λC | λ-6.5 | λ | λ+6.5 | nm | |
| **Side-Mode Suppression Ratio** | SMSR | 30 | | | dB | |
| **Relative Intensity Noise** | RIN | | | -128 | dB/Hz | |
| **Launch Power of Off Transmitter** | Poff | | | -30 | dBm | 1 |
| **Receiver** | | | | | | |
| **Receiver Sensitivity @10.3Gbps** | $R_{X_SEN}$ | | | -14.4 | dBm | 2 |
| **Receiver Overload** | $P_{OL}$ | 2 | | | dBm | |
| **Receiver Wavelength** | λC | 1260 | | 1620 | nm | |
| **Receiver Reflectance** | $TR_{RX}$ | | | -12 | dB | |
| **LOS Assert** | LOSA | -30 | | | dBm | |
| **LOS De-Assert** | LOSD | | | -17 | dBm | |
| **LOS Hysteresis** | LOSH | 0.5 | | | dB | |

**Notes:**

1. Average.
2. Average. Measured with worst ER, BER<$10^{-12}$, and $2^{31}$-1 PRBS.

**Pin Descriptions**

| Pin | Symbol | Name/Description | Notes |
|---|---|---|---|
| **1** | VeeT | Transmitter Ground (Common with Receiver Ground). | 1 |
| **2** | Tx_Fault | Transmitter Fault. | 2 |
| **3** | Tx_Disable | Transmitter Disable. Laser output disabled on “high” or “open.” | 3 |
| **4** | SDA | 2-Wire Serial Interface Data. | 4 |
| **5** | SCL | 2-Wire Serial Interface Clock. | 4 |
| **6** | MOD_ABS | Module Absent. Grounded within the module. | 4 |
| **7** | RS0 | No Connection Required. | |
| **8** | Rx_LOS | Loss of Signal Indication. “Logic 0” indicates normal operation. | 5 |
| **9** | RS1 | No Connection Required. | 1 |
| **10** | VeeR | Receiver Ground (Common with Transmitter Ground). | 1 |
| **11** | VeeR | Receiver Ground (Common with Transmitter Ground). | 1 |
| **12** | RD– | Receiver Inverted Data Out. AC Coupled. | |
| **13** | RD+ | Receiver Non-Inverted Data Out. AC Coupled. | |
| **14** | VeeR | Receiver Ground (Common with Transmitter Ground). | 1 |
| **15** | VccR | Receiver Power Supply. | |
| **16** | VccT | Transmitter Power Supply. | |
| **17** | VeeT | Transmitter Ground (Common with Receiver Ground). | 1 |
| **18** | TD+ | Transmitter Non-Inverted Data In. AC Coupled. | |
| **19** | TD– | Transmitter Inverted Data In. AC Coupled. | |
| **20** | VeeT | Transmitter Ground (Common with Receiver Ground). | 1 |

**Notes:**

1. The circuit ground is isolated from the chassis ground.
2. Tx_Fault is the open collector output and should be pulled up with 4.7kΩ to 10kΩ on the host board to a voltage between 2V and Vcc+0.3V.
3. Disabled: $T_{DIS}$>2V or open, enabled: $T_{DIS}$<0.8V.
4. Should be pulled up with 4.7kΩ to 10kΩ on the host board to a voltage between 2V and Vcc+0.3V.
5. LOS is an open collector output and should be pulled up with 4.7kΩ to 10kΩ on the host board to a voltage between 2V and Vcc+ 0.3V. The “logic 0” indicates normal operation. “Logic 1” indicates that the receiver signal is lost.

## Electrical Pad Layout

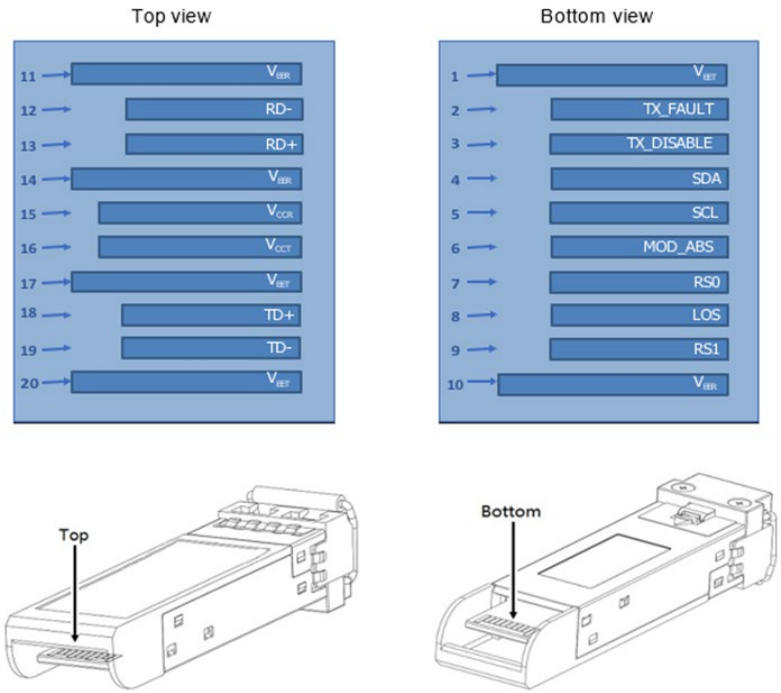


## Block Diagram of Transceiver

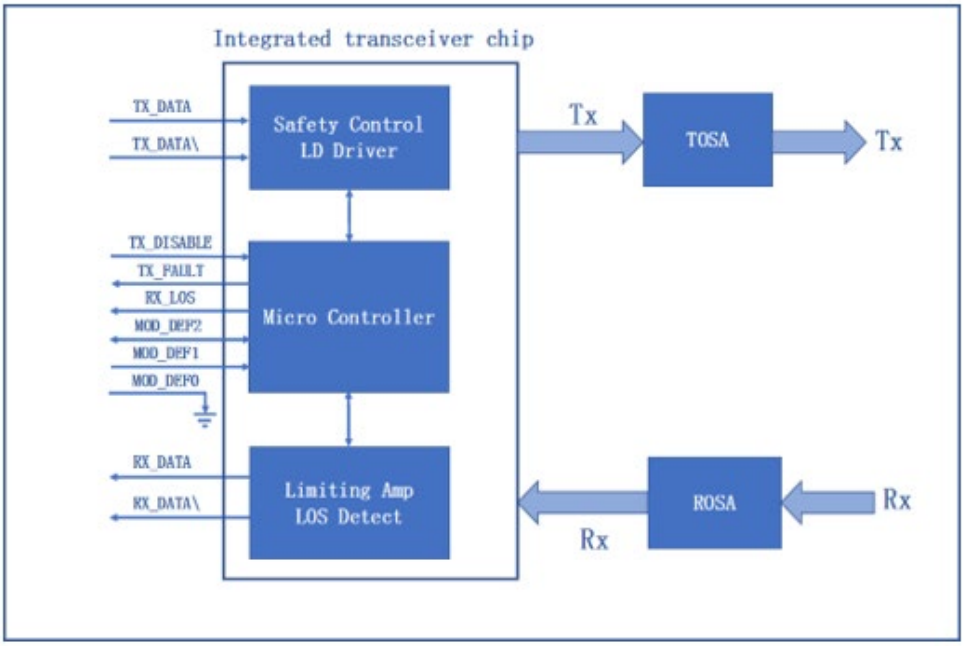

**Mechanical Specifications**

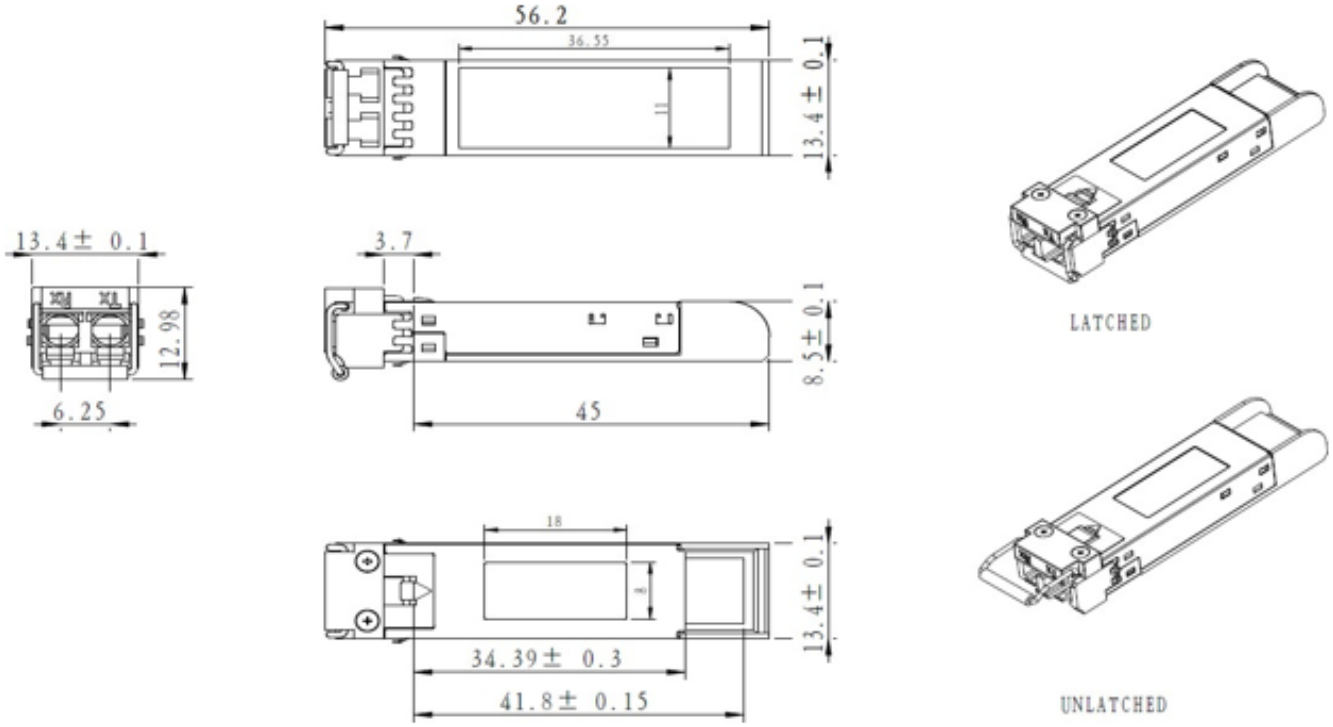

**About AddOn Networks**

In 1999, AddOn Networks entered the market with a single product. Our founders fulfilled a severe shortage for compatible, cost-effective optical transceivers that compete at the same performance levels as leading OEM manufacturers. Adhering to the idea of redefining service and product quality not previously had in the fiber optic networking industry, AddOn invested resources in solution design, production, fulfillment, and global support.

Combining one of the most extensive and stringent testing processes in the industry, an exceptional free tech support center, and a consistent roll-out of innovative technologies, AddOn has continually set industry standards of quality and reliability throughout its history.

Reliability is the cornerstone of any optical fiber network and is ingrained in AddOn's DNA. It has played a key role in nurturing the long-term relationships developed over the years with customers. AddOn remains committed to exceeding industry standards with certifications ranging from NEBS Level 3 to ISO 9001:2015 with every new development while maintaining the signature reliability of its products.


**U.S. Headquarters**

Email: sales@addonnetworks.com

Telephone: +1 877.292.1701

Fax: 949.266.9273

**Europe Headquarters**

Email: salesemea@addonnetworks.com

Telephone: +44 1285 842070