SFP-10GB-CW-37-LR-AO

MSA Compliant 10GBase-CWDM SFP+ Transceiver (SMF, 1370nm, 10km, LC, DOM)

Features:

- Single 3.3V Power Supply Voltage
- Compliant with IEEE 802.3ae 10GBASE-LR/LW
- CWDM DFB Laser Transmitter
- Single-Mode Fiber
- Hot-Pluggable
- Up to 10.7Gbps Bi-Directional Data Links
- Operating Temperature: 0 to 70 Celsius
- Duplex LC Connector
- RoHS Compliant and Lead-Free

Applications:

- 8x/10x Fibre Channel
- 10x Gigabit Ethernet over CWDM
- Access, Metro and Enterprise
- Mobile Fronthaul CPRI/OBSAI

Product Description

This MSA compliant SFP+ transceiver provides 10GBase-CWDM throughput up to 10km over single-mode fiber (SMF) using a wavelength of 1370nm via an LC connector. It is built to MSA standards and is uniquely serialized and data-traffic and application tested to ensure that they will integrate into your network seamlessly. Digital optical monitoring (DOM) support is also present to allow access to real-time operating parameters. We stand behind the quality of our products and proudly offer a limited lifetime warranty.

AddOn's transceivers are RoHS compliant and lead-free.

CWDM Available Wavelengths

Wavelengths	Min.	Typ.	Max.
27	1264.5	1271	1277.5
29	1284.5	1291	1297.5
31	1304.5	1311	1317.5
33	1324.5	1331	1337.5
35	1344.5	1351	1357.5
37	1364.5	1371	1377.5
39	1384.5	1391	1397.5
41	1404.5	1411	1417.5
43	1424.5	1431	1437.5
45	1444.5	1451	1457.5
47	1464.5	1471	1477.5
49	1484.5	1491	1497.5
51	1504.5	1511	1517.5
53	1524.5	1531	1537.5
55	1544.5	1551	1557.5
57	1564.5	1571	1577.5
59	1584.5	1591	1597.5
61	1604.5	1611	1617.5

Absolute Maximum Ratings

Parameter	Symbol	Min.	Typ.	Max.	Unit	Notes
Maximum Supply Voltage	Vcc	-0.5		4.0	V	1
Storage Temperature	Tstg	-40		90	°C	2
Operating Case Temperature	Tc	0		70	°C	3
Maximum Bitrate	BER			10^{-12}		
Data Rate	DR		10.3125		Gbps	4

Notes:

1. For the electrical power interface.
2. Ambient temperature.
3. Case temperature.

Electrical Characteristics

Parameter	Symbol	Min.	Typ.	Max.	Unit	Notes
Power Supply Voltage	Vcc	3.14	3.30	3.46	V	
Power Supply Current	Icc		200	310	mA	1
Power Consumption	PC		0.65	1.0	W	
Transmitter						
Differential Data Input Swing	VIN,pp	180		700	mV	
Input Differential Impedance	RIN		100		Ω	
Transmit Disable Voltage	VD	2		Vcc	V	
Transmit Enable Voltage	VEN	Vee		Vee+0.8	V	
Receiver						
Differential Data Output Swing	VOUT,pp	300		850	mV	
Output Differential Impedance	Tr/Tf	28			ps	
LOS Assert	VLOSA	2		Host_Vcc	V	
LOS De-Assert	VLOSD	Vee		Vee+0.5	V	

Notes:

1. For the electrical power interface.

Optical Characteristics

Parameter	Symbol	Min.	Typ.	Max.	Unit	Notes
Transmitter						
Optical Power (Average)	P_{TX}	2		7	dBm	1
Transmitter Dispersion Penalty	TDP			2	dB	
Optical Extinction Ratio	ER	3.5			dB	
Optical Wavelength	λC	λ-6.5	λ	λ+6.5	nm	
Side-Mode Suppression Ratio	SMSR	30			dB	
Relative Intensity Noise	RIN			-128	dB/Hz	
Launch Power of Off Transmitter	Poff			-30	dBm	1
Receiver						
Receiver Sensitivity @10.3Gbps	R_{X_SEN}			-14.4	dBm	2
Receiver Overload	P_{OL}	2			dBm	
Receiver Wavelength	λC	1260		1620	nm	
Receiver Reflectance	TR_{RX}			-12	dB	
LOS Assert	LOSA	-30			dBm	
LOS De-Assert	LOSD			-17	dBm	
LOS Hysteresis	LOSH	0.5			dB	

Notes:

1. Average.
2. Average. Measured with worst ER, BER<10^{-12}, and 2^{31}-1 PRBS.

Pin Descriptions

Pin	Symbol	Name/Description	Notes
1	VeeT	Transmitter Ground (Common with Receiver Ground).	1
2	Tx_Fault	Transmitter Fault.	2
3	Tx_Disable	Transmitter Disable. Laser output disabled on “high” or “open.”	3
4	SDA	2-Wire Serial Interface Data.	4
5	SCL	2-Wire Serial Interface Clock.	4
6	MOD_ABS	Module Absent. Grounded within the module.	4
7	RS0	No Connection Required.	
8	Rx_LOS	Loss of Signal Indication. “Logic 0” indicates normal operation.	5
9	RS1	No Connection Required.	1
10	VeeR	Receiver Ground (Common with Transmitter Ground).	1
11	VeeR	Receiver Ground (Common with Transmitter Ground).	1
12	RD–	Receiver Inverted Data Out. AC Coupled.	
13	RD+	Receiver Non-Inverted Data Out. AC Coupled.	
14	VeeR	Receiver Ground (Common with Transmitter Ground).	1
15	VccR	Receiver Power Supply.	
16	VccT	Transmitter Power Supply.	
17	VeeT	Transmitter Ground (Common with Receiver Ground).	1
18	TD+	Transmitter Non-Inverted Data In. AC Coupled.	
19	TD–	Transmitter Inverted Data In. AC Coupled.	
20	VeeT	Transmitter Ground (Common with Receiver Ground).	1

Notes:

1. The circuit ground is isolated from the chassis ground.
2. Tx_Fault is the open collector output and should be pulled up with 4.7kΩ to 10kΩ on the host board to a voltage between 2V and Vcc+0.3V.
3. Disabled: T_{DIS}>2V or open, enabled: T_{DIS}<0.8V.
4. Should be pulled up with 4.7kΩ to 10kΩ on the host board to a voltage between 2V and Vcc+0.3V.
5. LOS is an open collector output and should be pulled up with 4.7kΩ to 10kΩ on the host board to a voltage between 2V and Vcc+ 0.3V. The “logic 0” indicates normal operation. “Logic 1” indicates that the receiver signal is lost.

Electrical Pad Layout

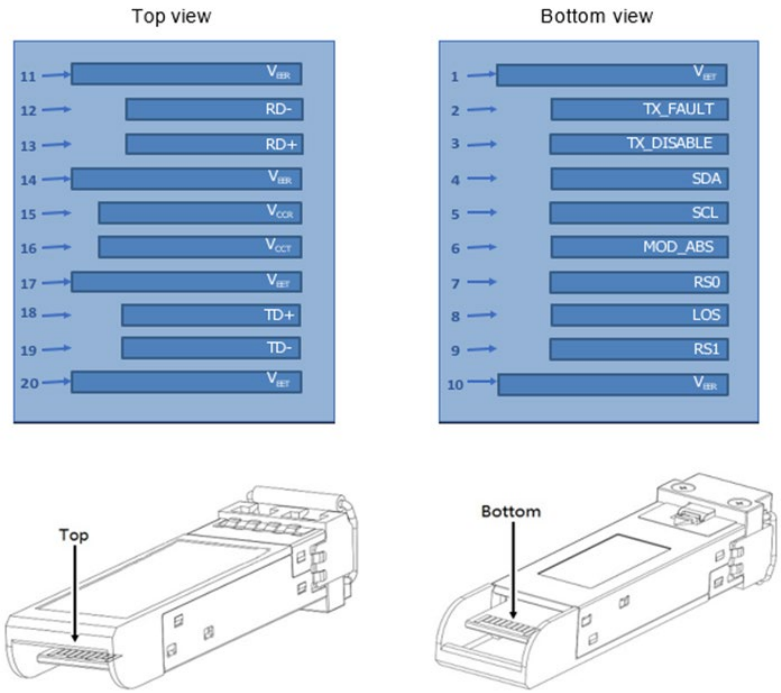

Block Diagram of Transceiver

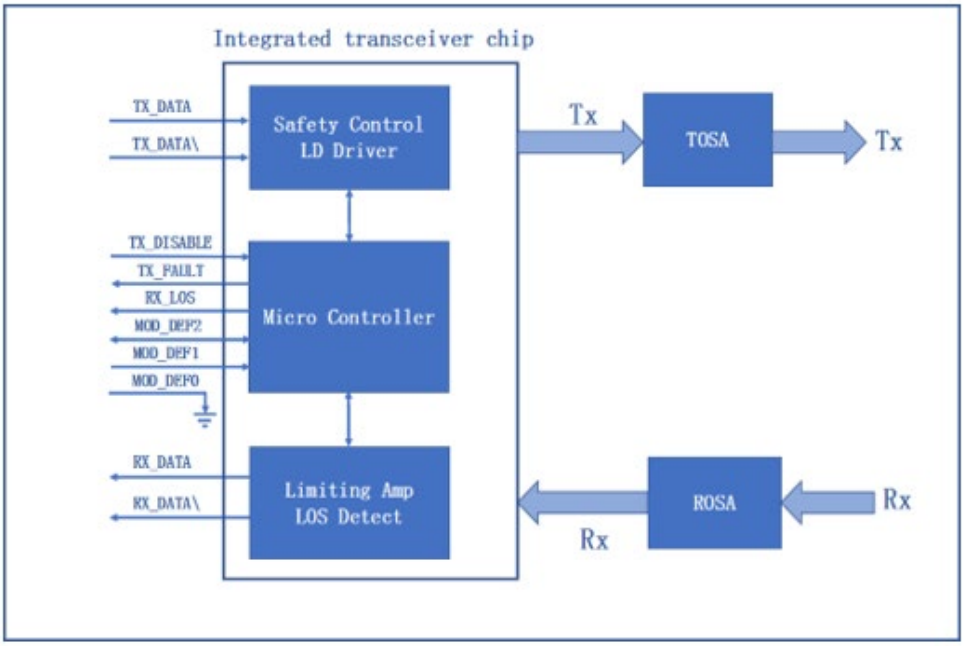

Mechanical Specifications

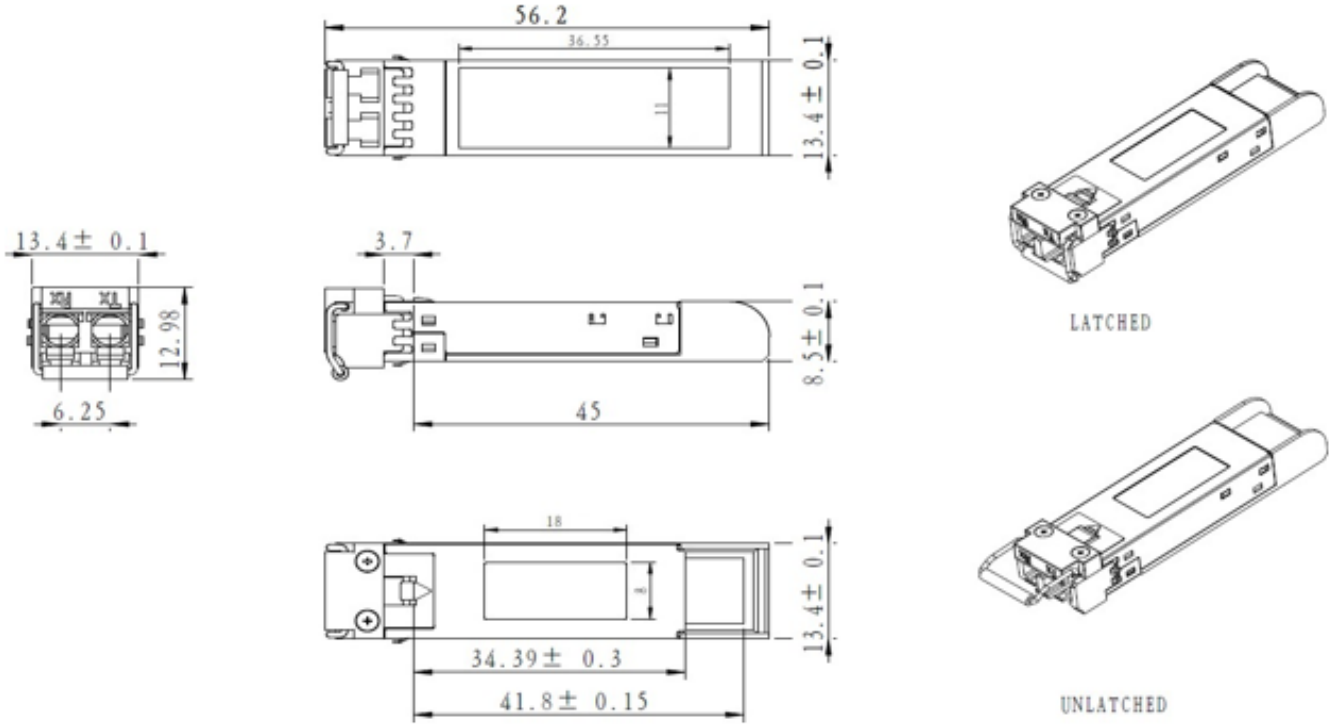

About AddOn Networks

In 1999, AddOn Networks entered the market with a single product. Our founders fulfilled a severe shortage for compatible, cost-effective optical transceivers that compete at the same performance levels as leading OEM manufacturers. Adhering to the idea of redefining service and product quality not previously had in the fiber optic networking industry, AddOn invested resources in solution design, production, fulfillment, and global support.

Combining one of the most extensive and stringent testing processes in the industry, an exceptional free tech support center, and a consistent roll-out of innovative technologies, AddOn has continually set industry standards of quality and reliability throughout its history.

Reliability is the cornerstone of any optical fiber network and is ingrained in AddOn's DNA. It has played a key role in nurturing the long-term relationships developed over the years with customers. AddOn remains committed to exceeding industry standards with certifications ranging from NEBS Level 3 to ISO 9001:2015 with every new development while maintaining the signature reliability of its products.

U.S. Headquarters

Email: sales@addonnetworks.com

Telephone: +1 877.292.1701

Fax: 949.266.9273

Europe Headquarters

Email: salesemea@addonnetworks.com

Telephone: +44 1285 842070