QDD-800GB-DR8P-C

MSA and TAA 800GBase-DR8+ PAM4 QSFP-DD Transceiver (SMF, 1310nm, 2km, MPO-16, DOM, CMIS 5.0)

Features:

- Compliant with IEEE 802.3cu-2021: 8x100GBASE-FR1 Optical Interface
- Compliant with IEEE 802.3ck-2022: 8x100GAUI-1 C2M Electrical Interface
- QSFP-DD MSA Compliant
- MPO Connector
- Compliant with CMIS 5.0
- Operating Temperature: 0 to 70 Celsius
- Class 1 Laser
- RoHS Compliant and Lead-Free

Applications:

- 800GBase Ethernet

Product Description

This MSA compliant QSFP-DD transceiver provides 800GBase-DR8+ throughput up to 2km over single-mode fiber (SMF) PAM4 using a wavelength of 1310nm via a MPO-16 connector. It can operate at temperatures between 0 and 70C. All of our transceivers are built to comply with Multi-Source Agreement (MSA) standards and are uniquely serialized and tested for data-traffic and application to ensure seamless network integration. Additional product features include Digital Optical Monitoring (DOM) support which allows access to real-time operating parameters. This transceiver is Trade Agreements Act (TAA) compliant. We stand behind the quality of our products and proudly offer a limited lifetime warranty.

ProLabs' transceivers are RoHS compliant and lead-free.

TAA refers to the Trade Agreements Act (19 U.S.C. & 2501-2581), which is intended to foster fair and open international trade. TAA requires that the U.S. Government may acquire only "U.S.-made or designated country end products.")

Rev. 012026

Absolute Maximum Ratings

Parameter	Symbol	Min.	Typ.	Max.	Unit	Notes
Storage Temperature	Tstg	-40		85	°C	
Operating Case Temperature	Tc	0		70	°C	
Power Supply Voltage	Vcc	-0.5		3.6	V	
Relative Humidity (Non-Condensing)	RH	5		95	%	
Data Input Voltage Differential	V_{DIP}-V_{DIN}			1	V	
Control Input Voltage	V_I	-0.3		Vcc+0.5	V	
Control Output Current	I_O	-20		20	mA	
Signaling Speed Per Lane	DRL		53.125		GBd	
Operating Distance		2		2000	m	

Electrical Characteristics

Parameter		Symbol	Min.	Typ.	Max.	Unit	Notes
Power Supply Voltage		Vcc	3.135	3.3	3.465	V	
Instantaneous Peak Current at Hot Plug		I_{CC_IP}			7200	mA	
Sustained Peak Current at Hot Plug		I_{CC_SP}			5940	mA	
Maximum Power Dissipation		PD			18	W	
Maximum Power Dissipation (Low-Power Mode)		PD_{LP}			2.5	W	
Control Input Voltage - High		VIH	Vcc*0.7		Vcc+0.3	V	
Control Input Voltage - Low		VIL	-0.3		Vcc*0.3	V	
2-Wire Serial Interface Clock Rate					400	kHz	
Power Supply Noise (1kHz to 1MHz, Pk-Pk)					66	mVp-p	
Transmitter (Module Input, TP1)							
Differential Pk-Pk Input Voltage Tolerance (TP1a)			750			mV	
Pk-Pk AC Common-Mode Voltage Tolerance	**Low-Frequency (VCM_{LF})**		32			mV	
	Full-Band (VCM_{FB})		80			mV	
Differential-Mode to Common-Mode Return Loss		RLcd	802.3ck 120G-2			dB	
Effective Return Loss		ERL	8.5			dB	
Differential Termination Mismatch					10	%	
Single-Ended Voltage Tolerance Range			-0.4		3.3	V	
DC Common-Mode Voltage Tolerance			-0.35		2.85	V	
Receiver (Module Output, TP4)							
Pk-Pk AC Common-Mode Voltage	**Low-Frequency (VCM_{LF})**				32	mV	
	Full-Band (VCM_{FB})				80	mV	
Differential Pk-Pk Output Voltage	**Short-Mode**				600	mV	
	Long-Mode				845	mV	

Eye Height	EH	15			mV	
Vertical Eye Closure	VEC			12	dB	
Common-Mode to Differential-Mode Return Loss	RLDc	802.3ck 120G-1			dB	
Effective Return Loss	ERL	8.5			dB	
Differential Termination Mismatch				10	%	
Transition Time		8.5			ps	
DC Common-Mode Voltage Tolerance		-0.35		2.85	V	

Electrical Low-Speed Control and Sense Signal Specifications

Parameter	Symbol	Min.	Max.	Unit	Notes
Module Output SCL and SDA	VOL	0	0.4	V	
Module Input SCL and SDA	VIL	-0.3	Vcc*0.3	V	
	VIH	Vcc*0.7	Vcc+0.5	V	
InitMode, ResetL, and ModSelL	VIL	-0.3	0.8	V	
	VIH	2	Vcc+0.3	V	
IntL	VOL	0	0.4	V	
	VOH	Vcc-0.5	Vcc+0.3	V	

Optical Characteristics

Parameter		Symbol	Min.	Typ.	Max.	Unit	Notes
Transmitter							
Wavelength		λC	1304.5	1311	1317.5	nm	
Side-Mode Suppression Ratio		SMSR	30			dB	
Average Launch Power Per Lane		AOP_L	-3.1		4.0	dBm	1
Outer Optical Modulation Amplitude (OMAouter) Per Lane	**TDECQ <1.4dB**	OMAouter	-0.1		4.2	dBm	
	1.4dB <=TDECQ <=3.4dB		-1.5 + TDECQ				
Transmitter and Dispersion Eye Closure for PAM4 (TDECQ) Per Lane		TDECQ			3.4	dB	
Transmitter Eye Closure for PAM4 (TECQ) Per Lane		TECQ			3.4	dB	
| TDECQ - TECQ|					2.5	dB	
Over/Under-Shoot					22	%	
Transmitter Power Excursion					2	dBm	
Average Launch Power of Off Transmitter Per Lane		Toff			-15	dBm	
Extinction Ratio		ER	3.5			dB	
Transmitter Transition Time		Tr			17	ps	
$RIN_{17.1}OMA$		RIN			-136	dB/Hz	
Optical Return Loss Tolerance		ORLT			17.1	dB	
Transmitter Reflectance		TR			-26	dB	2
Receiver							
Wavelength		λC	1304.5	1311	1317.5	nm	
Damage Threshold Per Lane		AOP_D	5			dBm	
Average Receive Power Per Lane		AOP_R	-7.1		4	dBm	
Receive Power (OMAouter) Per Lane		OMA_R			4.2	dBm	
Receiver Reflectance		RR			-26	dB	
Receiver Sensitivity (OMAouter)	**TECQ <1.4dB**	SOMA			-4.25	dBm	3
	1.4dB <=TECQ <=3.4dB				-5.9 + TECQ		
Stressed Receiver Sensitivity (OMAouter) Per Lane		SRS			-2.5	dBm	4
Conditions of Stressed Receiver Sensitivity Test							
Stressed Eye Closure for PAM4 (SECQ) Per Lane Under Test		SECQ		3.4		dB	

Notes:

1. Average launch power, per lane (minimum), is informative and not the principal indicator of signal strength.
2. Transmitter reflectance is defined looking into the transmitter.
3. Receiver sensitivity (OMAouter) per lane (maximum) is informative and is defined for a transmitter with a value of SECQ up to 3.4dB.
4. Measured with conformance test signal at TP3 for the BER = 2.4×10^{-4}.

Pin Descriptions

Pin	Symbol	Logic	Name/Description	Notes
1	GND		Module Ground.	
2	Tx2-	CML-I	Transmitter Inverted Data Input.	
3	Tx2+	CML-I	Transmitter Non-Inverted Data Input.	
4	GND		Module Ground.	
5	Tx4-	CML-I	Transmitter Inverted Data Input.	
6	Tx4+	CML-I	Transmitter Non-Inverted Data Input.	
7	GND		Module Ground.	
8	ModSelL	LVTTL-I	Module Select.	
9	ResetL	LVTTL-I	Module Reset.	
10	VccRx		+3.3V Receiver Power Supply.	
11	SCL	LVCMOS-I/O	2-Wire Serial Interface Clock.	
12	SDA	LVCMOS-I/O	2-Wire Serial Interface Data.	
13	GND		Module Ground.	
14	Rx3+	CML-O	Receiver Non-Inverted Data Output.	
15	Rx3-	CML-O	Receiver Inverted Data Output.	
16	GND		Module Ground.	
17	Rx1+	CML-O	Receiver Non-Inverted Data Output.	
18	Rx1-	CML-O	Receiver Inverted Data Output.	
19	GND		Module Ground.	
20	GND		Module Ground.	
21	Rx2-	CML-O	Receiver Inverted Data Output.	
22	Rx2+	CML-O	Receiver Non-Inverted Data Output.	
23	GND		Module Ground.	
24	Rx4-	CML-O	Receiver Inverted Data Output.	
25	Rx4+	CML-O	Receiver Non-Inverted Data Output.	
26	GND		Module Ground.	
27	ModPrsL	LVTTL-O	Module Present.	
28	IntL/RxLOS	LVTTL-O	Interrupt. Optionally configurable as RxLOSL via the management interface.	
29	VccTx		+3.3V Transmitter Power Supply.	
30	Vcc1		+3.3V Power Supply.	
31	LPMode/TxDis	LVTTL-I	Low-Power Mode. Optionally configurable as TxDis via the management interface.	
32	GND		Module Ground.	
33	Tx3+	CML-I	Transmitter Non-Inverted Data Input.	
34	Tx3-	CML-I	Transmitter Inverted Data Input.	
35	GND		Module Ground.	
36	Tx1+	CML-I	Transmitter Non-Inverted Data Input.	
37	Tx1-	CML-I	Transmitter Inverted Data Input.	
38	GND		Module Ground.	
39	GND		Module Ground.	
40	Tx6-	CML-I	Transmitter Inverted Data Input.	
41	Tx6+	CML-I	Transmitter Non-Inverted Data Input.	
42	GND		Module Ground.	

43	Tx8-	CML-I	Transmitter Inverted Data Input.	
44	Tx8+	CML-I	Transmitter Non-Inverted Data Input.	
45	GND		Module Ground.	
46	P/VS4	LVCMOS/CML-I	Programmable. Module Vendor-Specific 4.	
47	P/VS1	LVCMOS/CML-I	Programmable. Module Vendor-Specific 1.	
48	VccRx1		+3.3V Receiver Power Supply.	
49	P/VS2	LVCMOS/CML-O	Programmable. Module Vendor-Specific 2.	
50	P/VS3	LVCMOS/CML-O	Programmable. Module Vendor-Specific 3.	
51	GND		Module Ground.	
52	Rx7+	CML-O	Receiver Non-Inverted Data Output.	
53	Rx7-	CML-O	Receiver Inverted Data Output.	
54	GND		Module Ground.	
55	Rx5+	CML-O	Receiver Non-Inverted Data Output.	
56	Rx5-	CML-O	Receiver Inverted Data Output.	
57	GND		Module Ground.	
58	GND		Module Ground.	
59	Rx6-	CML-O	Receiver Inverted Data Output.	
60	Rx6+	CML-O	Receiver Non-Inverted Data Output.	
61	GND		Module Ground.	
62	Rx8-	CML-O	Receiver Inverted Data Output.	
63	Rx8+	CML-O	Receiver Non-Inverted Data Output.	
64	GND		Module Ground.	
65	NC		Not Connected.	
66	Reserved		For Future Use.	
67	VccTx1		+3.3V Power Supply.	
68	Vcc2		+3.3V Power Supply.	
69	ePPS/Clock	LVCMOS-I	1PPS PTP Clock or Reference Clock Input.	
70	GND		Module Ground.	
71	Tx7+	CML-I	Transmitter Non-Inverted Data Input.	
72	Tx7-	CML-I	Transmitter Inverted Data Input.	
73	GND		Module Ground.	
74	Tx5+	CML-I	Transmitter Non-Inverted Data Input.	
75	Tx5-	CML-I	Transmitter Inverted Data Input.	
76	GND		Module Ground.	

Electrical Pad Layout

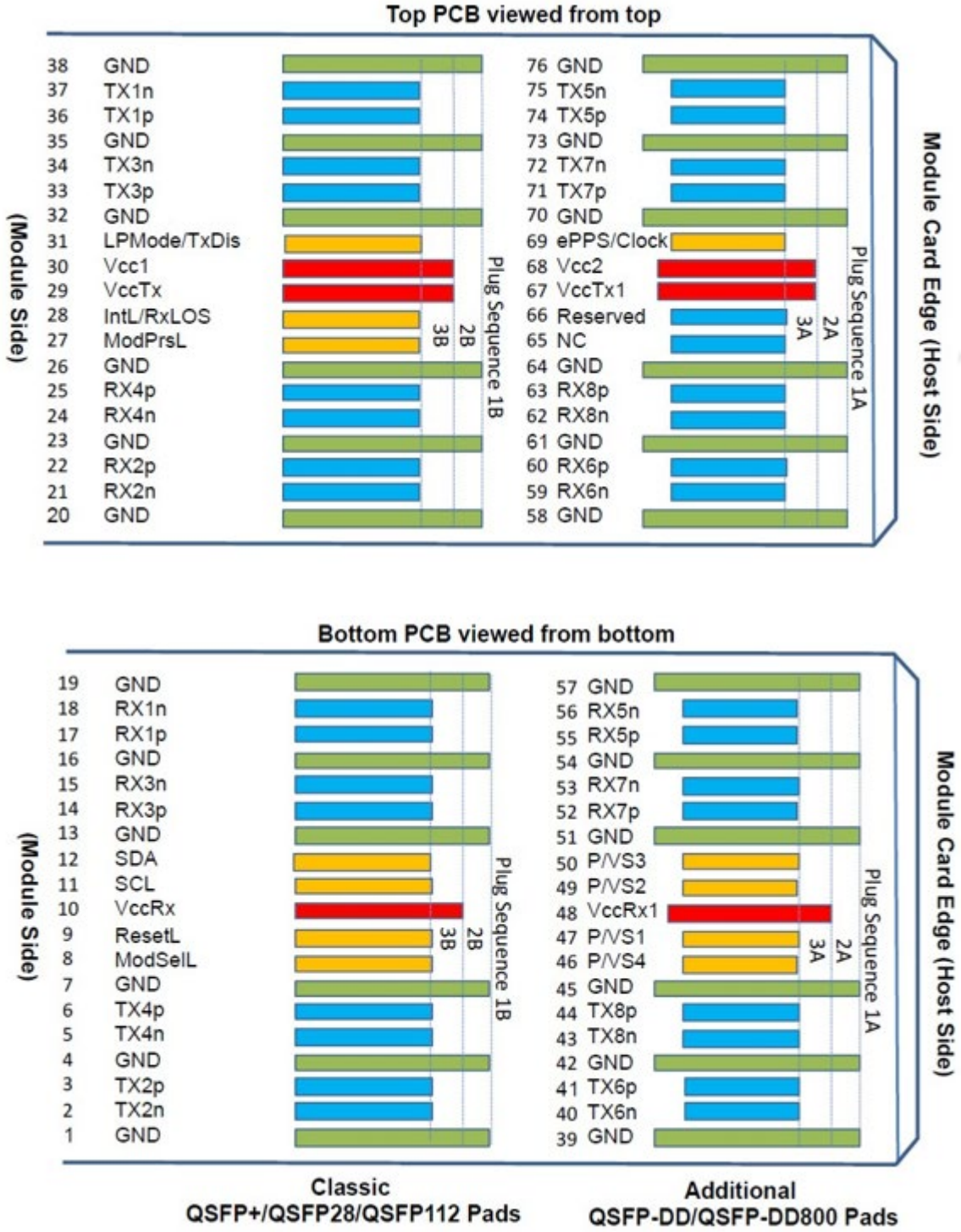

Recommended Host Board Schematic

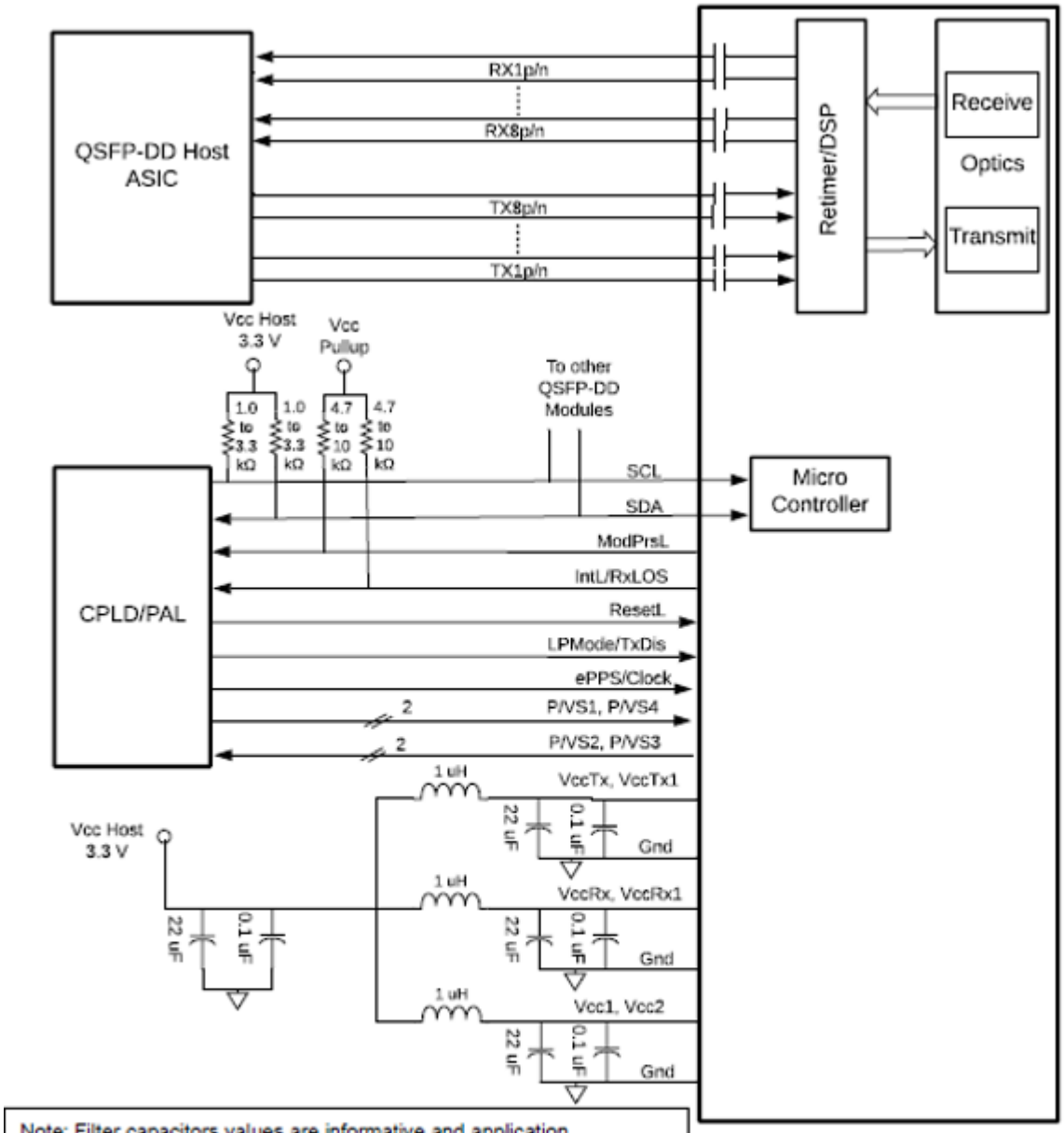

Note: Filter capacitors values are informative and application dependent, 0.1 µF capacitors should be placed in close proximity to power pads and may be duplicated for individual pads to provide additional high frequency filtering.

Note: Vcc1/Vcc2 may be connected to VccTx/VccTx1 or VccRx/VccRx1 within the module provided the applicable derating of the maximum current limit is used.

QSFP-DD/QSFP-DD800 Optical Module

Mechanical Specifications

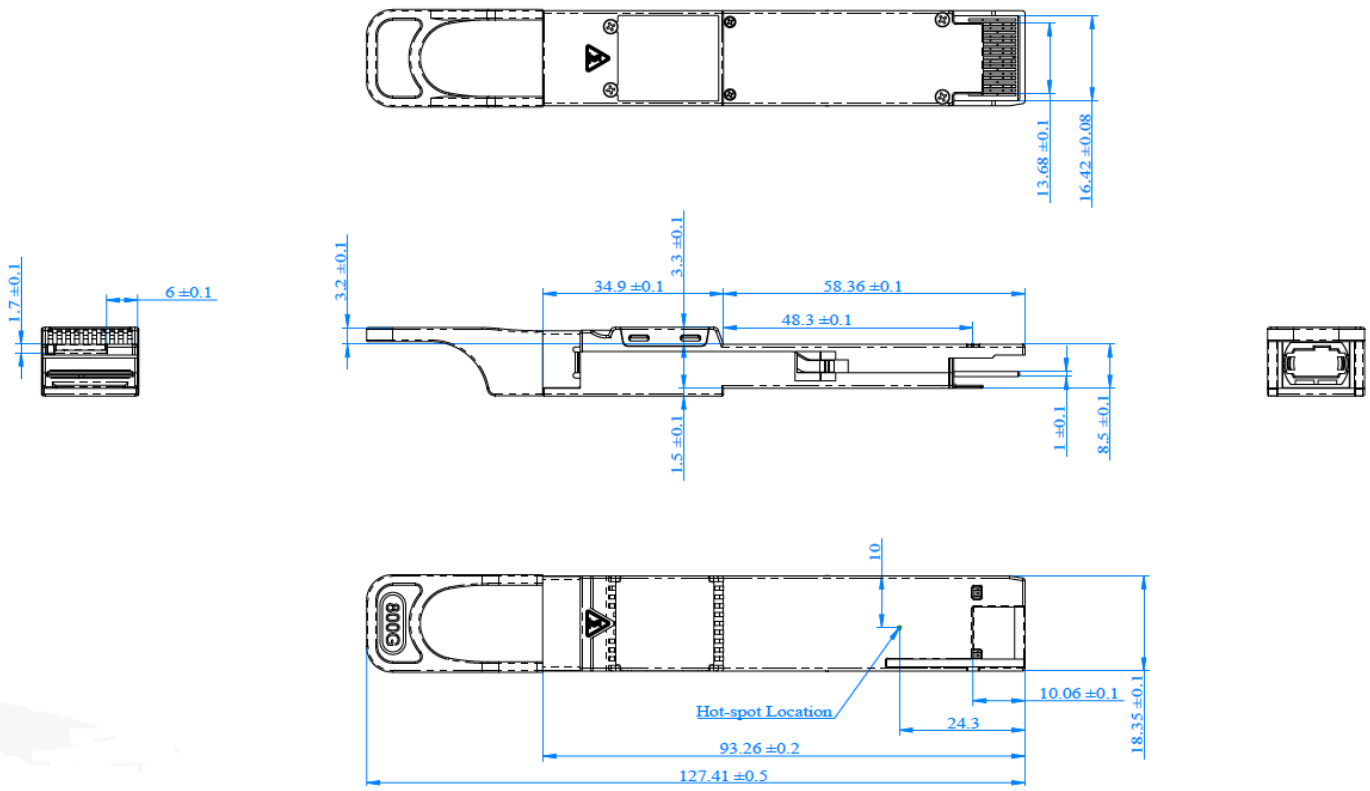

About ProLabs

Our extensive experience comes as standard. For over 20 years ProLabs has delivered optical connectivity solutions that give our customers freedom and choice through our ability to provide seamless interoperability. At the heart of our company is the ability to provide state-of-the-art optical transport and connectivity solutions that are compatible with more than 100 optical switching and transport platforms.

A Complete Portfolio of Network Solutions

ProLabs is focused on innovations in optical transport and connectivity. The combination of our knowledge of optics and networking equipment enables ProLabs to be your single source for optical transport and connectivity solutions from 100Mb to 1.6T while providing innovative solutions that increase network efficiency. We provide the optical connectivity expertise that is compatible with and enhances your switching and transport equipment.

The Trusted Partner

Customer service is our number one value. ProLabs has invested in people, labs and manufacturing capacity to ensure compatible products, and immediate answers to your questions. With Engineering and Manufacturing offices in the U.K. and U.S. augmented by field offices throughout the U.S., U.K. and Asia, ProLabs is able to be our customers best advocate 24 hours a day.

Contact Information

ProLabs US

Email: sales@prolabs.com
Telephone: 952-852-0252

ProLabs UK

Email: salessupport@prolabs.com
Telephone: +44 1285 719 600