SFP-10GB-CW-43-40-I-AO

MSA Compliant 10GBase-CWDM SFP+ Transceiver (SMF, 1430nm, 40km, LC, DOM, -40 to 85C)

Features:

- SFF-8432 and SFF-8472 Compliance
- Single-mode Fiber
- Duplex LC Connector
- Hot Pluggable
- Excellent ESD Protection
- Industrial Temperature -40 to 85 Celsius
- RoHS Compliant and Lead-Free
- Metal with Lower EMI

Applications:

- 8x/10x Fibre Channel
- 10x Gigabit Ethernet over CWDM
- Access, Metro and Enterprise
- Mobile Fronthaul CPRI/OBSAI

Product Description

This MSA compliant SFP+ transceiver provides 10GBase-CWDM throughput up to 40km over single-mode fiber (SMF) using a wavelength of 1430nm via an LC connector. It is capable of withstanding rugged environments and can operate at temperatures between -40 and 85C. The listed reach has been determined using a link budget calculation and tested in a standard environment. Actual link distances achieved will be dependent upon the deployed environment. All of our transceivers are built to comply with Multi-Source Agreement (MSA) standards and are uniquely serialized and tested for data-traffic and application to ensure seamless network integration. Additional product features include Digital Optical Monitoring (DOM) support which allows access to real-time operating parameters. We stand behind the quality of our products and proudly offer a limited lifetime warranty.

AddOn's transceivers are RoHS compliant and lead-free.

CWDM Available Wavelengths

Wavelengths	Min.	Typ.	Max.
27	1264.5	1271	1277.5
29	1284.5	1291	1297.5
31	1304.5	1311	1317.5
33	1324.5	1331	1337.5
35	1344.5	1351	1357.5
37	1364.5	1371	1377.5
39	1384.5	1391	1397.5
41	1404.5	1411	1417.5
43	1424.5	1431	1437.5
45	1444.5	1451	1457.5

Absolute Maximum Ratings

Parameter	Symbol	Min.	Typ.	Max.	Unit
Maximum Supply Voltage	Vcc	-0.5		3.6	V
Storage Temperature	Tstg	-40		85	°C
Operating Case Temperature	Tc	-20		85	°C
Relative Humidity (Non-Condensing)	RH	0		85	%
Data Rate	DR	0.6	9.953/10.3125		Gbps

Notes:

1. Exceeding any one of these values may destroy the device immediately.

Electrical Characteristics

Parameter		Symbol	Min.	Typ.	Max.	Unit	Notes
Power Supply Voltage		Vcc	3.15	3.30	3.43	V	
Power Consumption		P_{DISS}			1.5	W	
Transmitter							
CML Differential Inputs		VIN	150		1200	mVp-p	AC Coupled Inputs
Input AC Common-Mode Voltage			0		25	mV	RMS
Input Differential Impedance		ZIN	85	100	115	Ω	RIN>100kΩ @DC
Tx_Disable	**High**		2		Vcc	V	
	Low		0		0.8		
Tx_Fault	**High**		2		Vcc+0.3	V	Io = 400µA; Host_Vcc
	Low		0		0.5		Io = -4.0mA
Receiver							
CML Differential Outputs		VOUT	350		700	mVp-p	AC Coupled Outputs
Output Differential Impedance		ZOUT	85	100	115	Ω	
Rx_LOS	**High**		2		Vcc+0.3		Io = 400µA; Host_Vcc
	Low		0		0.8		Io = -4.0mA
MOD_DEF(0.2)		VOH	2.5			V	With Serial ID
		VOL	0		0.5	V	With Serial ID

Optical Characteristics

Parameter	Symbol	Min.	Typ.	Max.	Unit	Notes
Transmitter						
Center Wavelength	λC	λ-6.5	λ	λ+6.5	nm	
Average Output Power	POUT	0		6	dBm	1
Extinction Ratio	ER	3.5		dB	dB	
Average Power of Off Transmitter	Poff			-30	dBm	
Side-Mode Suppression Ratio	SMSR	30		dB		
-20dB Spectral Width	Δλ			1	nm	
Transmitter Dispersion Penalty	TDP			3	dB	
Relative Intensity Noise	RIN			-128	dB/Hz	
Tx_Disable Assert Time	T_off			10	us	
Receiver						
Center Wavelength	λC	1260		1620	nm	
Receiver Sensitivity	Pmin			-15	dBm	2
Receiver Overload	Pmax	0		dBm	nm	
LOS De-Assert	LOSD			-17	dBm	
LOS Assert	LOSA	-28		dBm		
LOS Hysteresis	LOSH	0.5		dB		

Notes:

1. Output is coupled into a 9/125µm SMF.
2. Measured with worst ER, BER less than $1E^{-12}$, and PRBS 2^{31}-1 @10.3125Gbps.

Pin Descriptions

Pin	Symbol	Name/Description	Notes
1	VeeT	Transmitter Ground (Common with Receiver Ground).	1
2	Tx_Fault	Transmitter Fault. LVTTL-O.	2
3	Tx_Disable	Transmitter Disable. Laser output disabled on “high” or “open.” LVTT-I.	3
4	SDA	2-Wire Serial Interface Data (Same as MOD-DEF2 in INF-8074i). LVTTL-I/O.	
5	SCL	2-Wire Serial Interface Clock (Same as MOD-DEF2 in INF-8074i). LVTTL-I.	
6	MOD_ABS	Module Absent. Connect to the VeeT or VeeR in the module.	4
7	RS0	Rate Select 0. Not Used.	5
8	LOS	Loss of Signal Indication. “Logic 0” indicates normal operation. LVTTL-O.	2
9	RS1	Rate Select 1. Not Used.	5
10	VeeR	Receiver Ground (Common with Transmitter Ground).	1
11	VeeR	Receiver Ground (Common with Transmitter Ground).	1
12	RD-	Receiver Inverted Data Out. AC Coupled. CML-O.	
13	RD+	Receiver Non-Inverted Data Out. AC Coupled. CML-O.	
14	VeeR	Receiver Ground (Common with Transmitter Ground).	1
15	VccR	Receiver Power Supply.	
16	VccT	Transmitter Power Supply.	
17	VeeT	Transmitter Ground (Common with Receiver Ground).	1
18	TD+	Transmitter Non-Inverted Data In. AC Coupled. CML-I.	
19	TD-	Transmitter Inverted Data In. AC Coupled. CML-O.	
20	VeeT	Transmitter Ground (Common with Receiver Ground).	1

Notes:

1. The module signal ground contacts, VeeR and VeeT, should be isolated from the module case.
2. This contact is an open collector/drain output and should be pulled up to the Host_Vcc with resistor in the range 4.7kΩ to 10kΩ. Pull-ups can be connected to one or several power supplies; however, the host board design shall ensure that no module contact has a voltage exceeding the module VccT/R+0.5V.
3. Tx_Disable is an input contact with a 4.7kΩ to 10kΩ pull-up resistor to the VccT inside the module.
4. MOD_ABS is connected to the VeeT or VeeR in the SFP+ module. The host may pull the contact up to the Host_Vcc with a resistor in the range from 4.7kΩ to 10kΩ. MOD_ABS is asserted “high” when the SFP+ module is physically absent from a host slot.
5. Internally pulled down per SFF-8431.

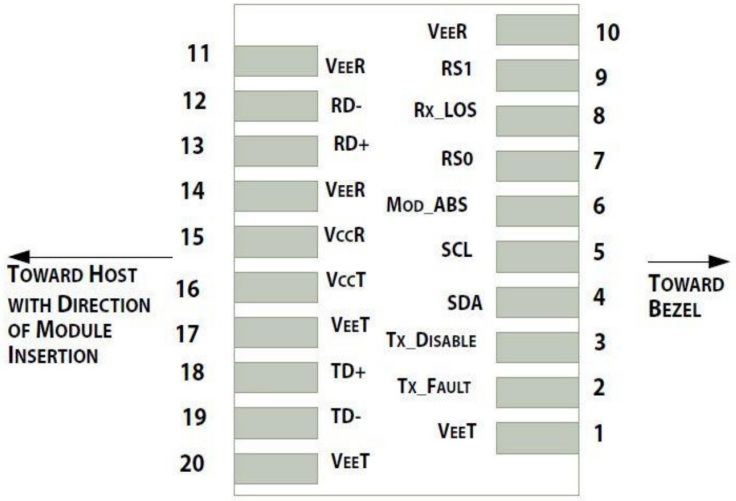

Pin-Out of Connector Block on the Host Board

Recommended Circuit Schematic

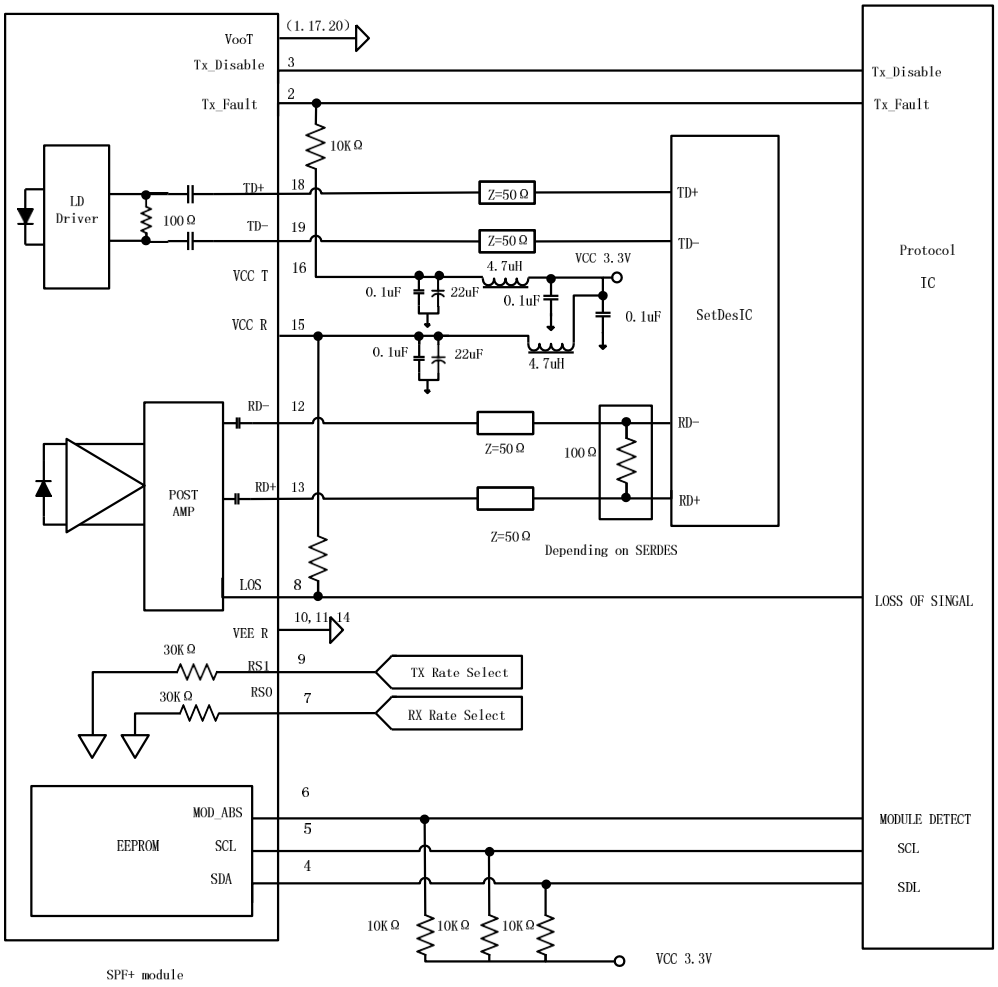

Mechanical Specifications

Small Form Factor Pluggable (SFP) transceivers are compatible with the dimensions defined by the SFP Multi-Sourcing Agreement (MSA).

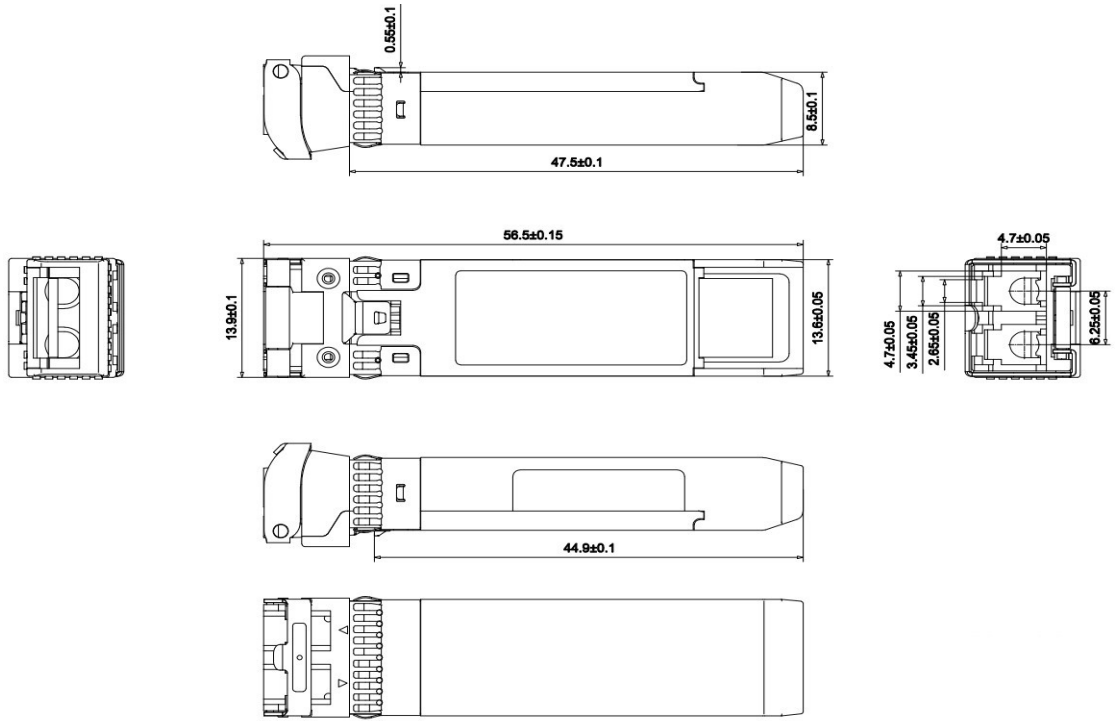

About AddOn Networks

In 1999, AddOn Networks entered the market with a single product. Our founders fulfilled a severe shortage for compatible, cost-effective optical transceivers that compete at the same performance levels as leading OEM manufacturers. Adhering to the idea of redefining service and product quality not previously had in the fiber optic networking industry, AddOn invested resources in solution design, production, fulfillment, and global support.

Combining one of the most extensive and stringent testing processes in the industry, an exceptional free tech support center, and a consistent roll-out of innovative technologies, AddOn has continually set industry standards of quality and reliability throughout its history.

Reliability is the cornerstone of any optical fiber network and is ingrained in AddOn's DNA. It has played a key role in nurturing the long-term relationships developed over the years with customers. AddOn remains committed to exceeding industry standards with certifications ranging from NEBS Level 3 to ISO 9001:2015 with every new development while maintaining the signature reliability of its products.

U.S. Headquarters

Email: sales@addonnetworks.com

Telephone: +1 877.292.1701

Fax: 949.266.9273

Europe Headquarters

Email: salesemea@addonnetworks.com

Telephone: +44 1285 842070