SFP-6GBASE-SW-AO

MSA Compliant 6GBase-SW SFP+ Transceiver (MMF, 850nm, 300m, LC, DOM)

Features:

- SFF-8432 and SFF-8472 Compliance
- Duplex LC Connector
- Commercial Temperature 0 to 70 Celsius
- Multi-mode Fiber
- Hot Pluggable
- Excellent ESD Protection
- Metal with Lower EMI
- RoHS Compliant and Lead Free

Applications:

- 6GBase Ethernet
- Access and Enterprise

Product Description

This MSA compliant SFP+ transceiver provides 6GBase-SW throughput up to 300m over multi-mode fiber (MMF) using a wavelength of 850nm via an LC connector. It is built to MSA standards and is uniquely serialized and data-traffic and application tested to ensure that they will integrate into your network seamlessly. Digital optical monitoring (DOM) support is also present to allow access to real-time operating parameters. We stand behind the quality of our products and proudly offer a limited lifetime warranty.

AddOn's transceivers are RoHS compliant and lead-free.

Regulatory Compliance

- ESD to the Electrical PINs: compatible with MIL-STD-883E Method 3015.4
- ESD to the LC Receptacle: compatible with IEC 61000-4-3
- EMI/EMC compatible with FCC Part 15 Subpart B Rules, EN55022:2010
- Laser Eye Safety compatible with FDA 21CFR, EN60950-1& EN (IEC) 60825-1,2
- RoHS compliant with EU RoHS 2.0 directive 2015/863/EU

Absolute Maximum Ratings

Parameter	Symbol	Min.	Typ.	Max.	Unit
Maximum Supply Voltage	Vcc	-0.5		4.0	V
Storage Temperature	TS	-40		85	°C
Operating Case Temperature	Tc	0	25	70	°C
Operating Humidity	RH	5		95	%
Receiver Power	R_{MAX}			-1	dBm
Maximum Bitrate	B_{max}		6.144		Gbps

Electrical Characteristics (TOP=25°C, Vcc=3.3Volts)

Parameter	Symbol	Min.	Typ.	Max.	Unit	Notes
Power Supply Voltage	Vcc	3.135	3.30	3.465	V	
Power Supply Current	Icc			290	mA	
Power Dissipation	P_D			1000	mW	
Transmitter						
Differential data input swing	Vin,pp	180		700	mVp-p	
Input differential impedance	Zin		100		Ω	
Receiver						
Differential data output swing	Vout, pp	300		850	mVp-p	1
Output differential impedance	Zin		100		Ω	
Data Output Rise Time, Fall Time	tr, tf	28			ps	2

Notes:

1. Internally AC coupled, but requires an external 100Ω differential load termination.
2. 20–80%.

Optical Characteristics

Parameter	Symbol	Min.	Typ.	Max.	Unit	Notes
Transmitter						
Launch Optical Power	Po	-5		-1	dBm	1
Optical Modulation amplitude (OMA)	P_{OMA}	Refer to Table on Page 4			dBm	1
Spectral Width (RMS)	Δλ	Refer to Table on Page 4				
Transmitter and Dispersion Penalty	TDP			3.9	dB	
Optical Extinction Ratio	ER	3			dB	2
Optical Wavelength	Tλ	840	850	860	nm	
Optical Return Loss Tolerance	ORLT			12	dB	
Pout @TX-Disable Asserted	Poff			-30	dBm	1
Receiver						
Receiver Sensitivity (Pavg)	S			-9.9	dBm	3
Receiver Sensitivity (OMA)	SOMA			-11.1	dBm	3
Receiver Overload (Pavg)	Pol	-1.0			dBm	3
Stressed Sensitivity (OMA)				-7.5	dBm	
Optical Return Loss	ORL	12			dB	
Receiver wavelength	Rλ	840		860	nm	
LOS De-Assert	LOSD			-11	dBm	
LOS Assert	LOSA	-30			dBm	
LOS Hysteresis		0.5			dB	

Notes:

1. 50/125µm fiber with NA = 0.2, 62.5/125µm fiber with NA = 0.275.
2. Measured with a PRBS 2^{31}-1 test pattern @6.144Gbps.
3. Measured with PRBS 2^{31}-1 test pattern@6.144Gb/s, BER<10^{-12}.

Minimum Optical Modulation Amplitude as a Function of Center Wavelength and Spectral Width

Center Wavelength (nm)	RMS Spectral Width (nm)								
	Up to 0.05	0.05 to 0.1	0.1 to 0.15	0.15 to 0.2	0.2 to 0.25	0.25 to 0.3	0.3 to 0.35	0.35 to 0.4	0.4 to 0.45
840 to 842	-4.2	-4.2	-4.1	-4.1	-3.9	-3.8	-3.5	-3.2	-2.8
842 to 844	-4.2	-4.2	-4.2	-4.1	-3.9	-3.8	-3.6	-3.3	-2.9
844 to 846	-4.2	-4.2	-4.2	-4.1	-4.0	-3.8	-3.6	-3.3	-2.9
846 to 848	-4.3	-4.2	-4.2	-4.1	-4.0	-3.8	-3.6	-3.3	-2.9
848 to 850	-4.3	-4.2	-4.2	-4.1	-4.0	-3.8	-3.6	-3.3	-3.0
850 to 852	-4.3	-4.2	-4.2	-4.1	-4.0	-3.8	-3.6	-3.4	-3.0
852 to 854	-4.3	-4.2	-4.2	-4.1	-4.0	-3.9	-3.7	-3.4	-3.1
854 to 856	-4.3	-4.3	-4.2	-4.1	-4.0	-3.9	-3.7	-3.4	-3.1
856 to 858	-4.3	-4.3	-4.2	-4.1	-4.0	-3.9	-3.7	-3.5	-3.1
858 to 860	-4.3	-4.3	-4.2	-4.2	-4.1	-3.9	-3.7	-3.5	-3.2

Pin Descriptions

Pin	Symbol	Name/Descriptions	Ref.
1	VeeT	Transmitter Ground (Common with Receiver Ground).	1
2	TX Fault	Transmitter Fault. LVTTL-O	2
3	TX Disable	Transmitter Disable. Laser output disabled on high or open. LVTT-I.	3
4	SDA	2-Wire Serial Interface Data Line (Same as MOD-DEF2 in INF-8074i). LVTTL-I/O.	
5	SCL	2-Wire Serial Interface Data Line (Same as MOD-DEF2 in INF-8074i). LVTTL-I.	
6	MOD_ABS	Module Absent, Connect to VeeT or VeeR in Module.	4
7	RS0	Rate Select 0. Not used	5
8	LOS	Loss of Signal indication. Logic 0 indicates normal operation. LVTTL-O.	2
9	RS1	Rate Select 1. Not used	5
10	VeeR	Receiver Ground (Common with Transmitter Ground).	1
11	VeeR	Receiver Ground (Common with Transmitter Ground).	1
12	RD-	Receiver Inverted DATA out. AC Coupled. CML-O.	
13	RD+	Receiver Non-inverted DATA out. AC Coupled. CML-O.	
14	VeeR	Receiver Ground (Common with Transmitter Ground).	1
15	VccR	Receiver Power Supply.	
16	VccT	Transmitter Power Supply.	
17	VeeT	Transmitter Ground (Common with Receiver Ground).	1
18	TD+	Transmitter Non-Inverted DATA in. AC Coupled. CML-I.	
19	TD-	Transmitter Inverted DATA in. AC Coupled. CML-O.	
20	VeeT	Transmitter Ground (Common with Receiver Ground).	1

Notes:

1. The module signal ground contacts, VeeR and VeeT, should be isolated from the module case.
2. This contact is an open collector/drain output and should be pulled up to the Vcc_Host with resister in the range 4.7KΩ to 10KΩ. Pull ups can be connected to one or several power supplies, however the host board design shall ensure that no module contract has voltage exceeding module VccT/R +0.5.V.
3. Tx_Disable is an input contact with a 4.7KΩ to 10KΩ pull-up resistor to VccT inside module.
4. Mod_ABS is connected to VeeT or VeeR in the SFP+ module. The host may pull the contract up to Vcc_Host with a resistor in the range from 4.7KΩ to 10KΩ. Mod_ABS is asserted “High” when the SFP+ module is physically absent from a host slot.
5. Internally pulled down per SFF-8431

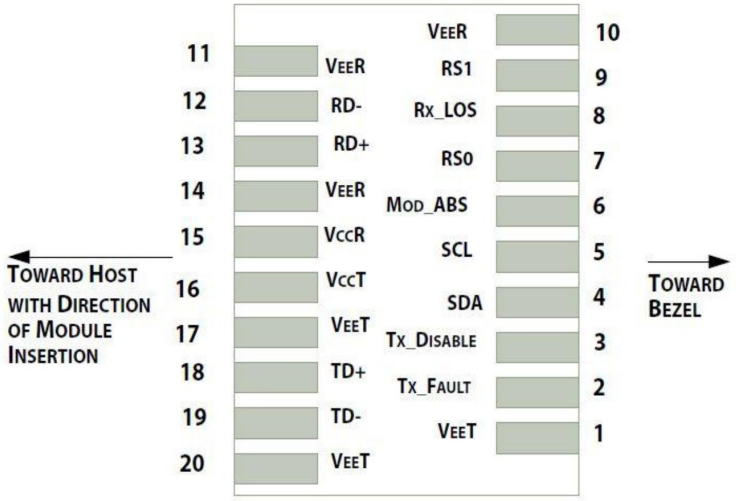

Pin-out of connector Block on Host board

Recommended Circuit Schematic

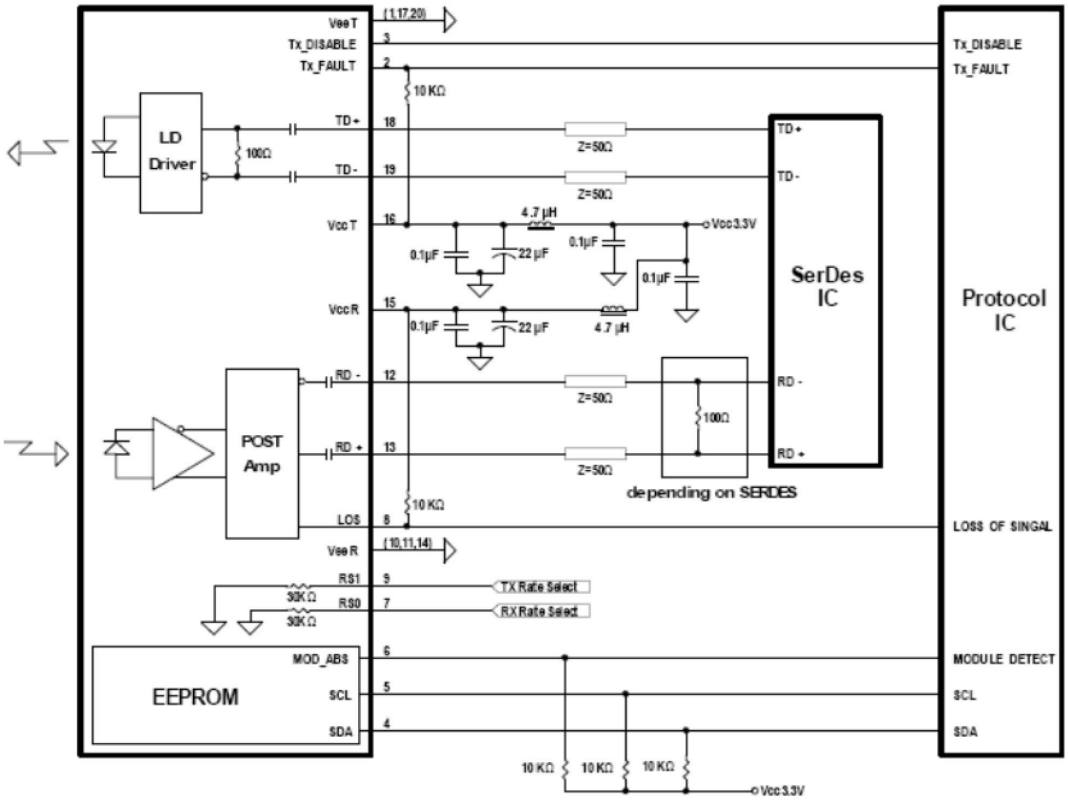

Mechanical Specifications

Small Form Factor Pluggable (SFP) transceivers are compatible with the dimensions defined by the SFP Multi-Sourcing Agreement (MSA).

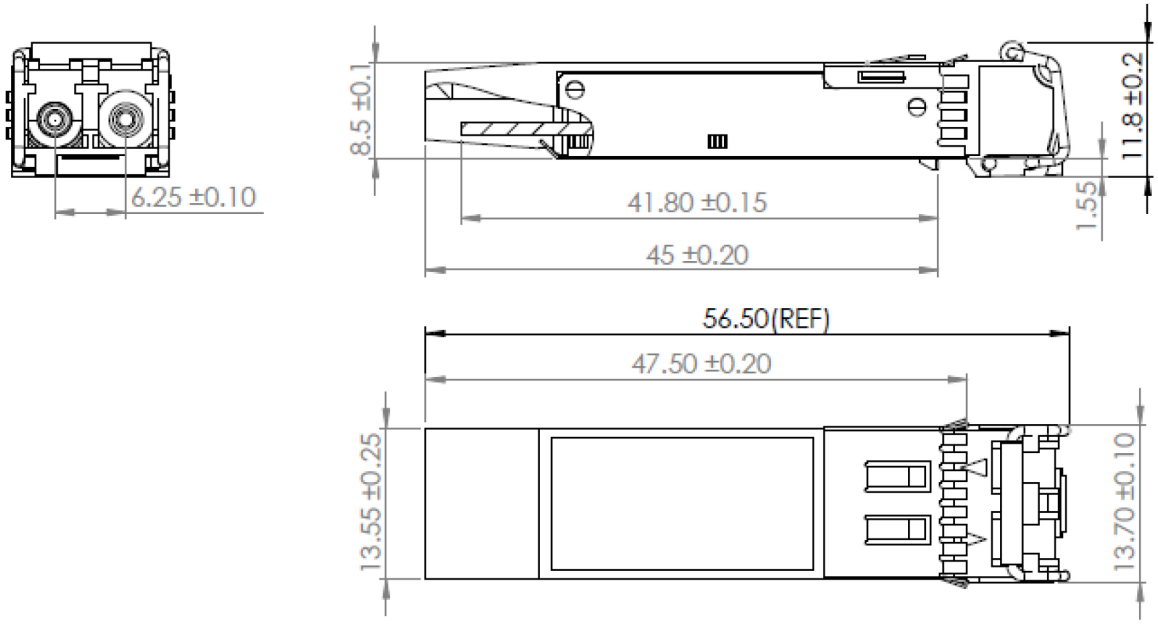

EEPROM Information

EEPROM memory map specific data field description is as below:

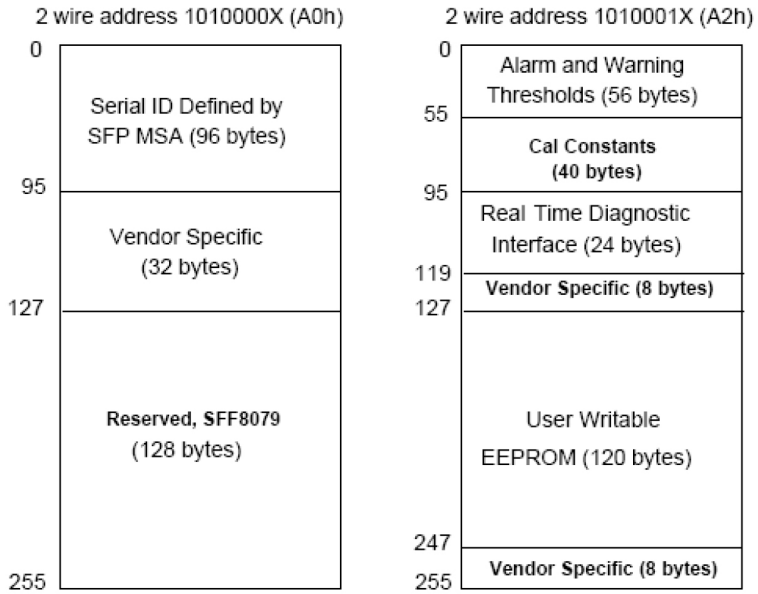

About AddOn Networks

In 1999, AddOn Networks entered the market with a single product. Our founders fulfilled a severe shortage for compatible, cost-effective optical transceivers that compete at the same performance levels as leading OEM manufacturers. Adhering to the idea of redefining service and product quality not previously had in the fiber optic networking industry, AddOn invested resources in solution design, production, fulfillment, and global support.

Combining one of the most extensive and stringent testing processes in the industry, an exceptional free tech support center, and a consistent roll-out of innovative technologies, AddOn has continually set industry standards of quality and reliability throughout its history.

Reliability is the cornerstone of any optical fiber network and is ingrained in AddOn's DNA. It has played a key role in nurturing the long-term relationships developed over the years with customers. AddOn remains committed to exceeding industry standards with certifications ranging from NEBS Level 3 to ISO 9001:2015 with every new development while maintaining the signature reliability of its products.

U.S. Headquarters

Email: sales@addonnetworks.com

Telephone: +1 877.292.1701

Fax: 949.266.9273

Europe Headquarters

Email: salesemea@addonnetworks.com

Telephone: +44 1285 842070