ADD-S28HPS28MX-P3M

HP® JL488A to NVIDIA® MCP2M00-A003 Compatible TAA 25GBase-CU SFP28 to SFP28 Direct Attach Cable (Passive Twinax, 3m)

Features:

- QSFP28 End: Compliant with QSFP28 MSA specifications
- 4 independent duplex channels operating at 25Gbps
- SFP28 End: Compliant with SFP28 MSA specifications
- 100 Ohm differential impedance
- All-metal housing for superior EMI performance
- AC coupled inputs and outputs
- Operating temperature range: 0 to 70 Celsius
- Single power supply 3.3V, low power consumption
- RoHS Compliant and Lead Free



Applications:

- Serial Data Transmission
- 100Gigabit Ethernet
- Infiniband EDR

Product Description

This HP® JL488A to NVIDIA® MCP2M00-A003 dual OEM compatible 100GBase-CU QSFP28 to 4xSFP28 passive TAA (Trade Acts Agreement) compliant direct attach cable has a maximum reach of 3.0m (9.8ft). It is 100% HP® to NVIDIA® compatible and has been programmed, uniquely serialized, and data-traffic and application tested to ensure that it is compliant and functional. This direct attach cable will initialize and perform identically to HP® to NVIDIA®'s individual cables and is built to meet or exceed HP® to NVIDIA®'s specifications and comply with MSA (Multi-Source Agreement) standards. We stand behind the quality of our products and proudly offer a limited lifetime warranty.

AddOn's transceivers are RoHS compliant and lead-free.

TAA refers to the Trade Agreements Act (19 U.S.C. & 2501-2581), which is intended to foster fair and open international trade. TAA requires that the U.S. Government may acquire only "U.S.-made or designated country end products."

TAA COMPLIANT

General Specifications

Parameter	Symbol	Min.	Typ.	Max.	Unit	Notes
Bit Error Rate	BER			10^{-12}		
Operating Temperature	Tc	0		70	°C	1
Storage Temperature	Tstg	-40		85	°C	2
Input Voltage	Vcc	3.14	3.3	3.46	V	
Product Weight	Gd		290		g/PCS	
Cable Weight	Gc		155		g/M	3
SFP28 End Dust Cap Weight	Gs		0.80		g/PCS	
QSFP28 End Dust Cap Weight	Gq		1.40		g/PCS	
Cable Impedance	Z	90	100	110	Ω	

Notes:

1. Case temperature.
2. Ambient temperature.
3. The weight of unit length cable (four sticks). For example, the weight of a 5m cable is 320+175*(5-1)+0.80*4+1.40=1024.6g.

Cable Specifications

Cable Length	Wire Gauge AWG	Cable Diameter OD (mm)	Minimum Bending Radius R (mm)	Insertion Loss Level
3m	28AWG	5.0	28	CA-25G-S

QSFP28 Pin Descriptions

Pin	Symbol	Name/Description	Notes
1	GND	Module Ground.	5
2	Tx2-	Transmitter Inverted Data Input. LAN2.	
3	Tx2+	Transmitter Non-Inverted Data Input. LAN2.	
4	GND	Module Ground.	5
5	Tx4-	Transmitter Inverted Data Input. LAN4.	
6	Tx4+	Transmitter Non-Inverted Data Input. LAN4.	
7	GND	Module Ground.	5
8	ModselL	Module Select Pin. The module responds to 2-wire serial communication when low level.	1
9	ResetlL	Module Reset.	2
10	VccRx	+3.3V Receiver Power Supply.	
11	SCL	2-Wire Serial Interface Clock.	
12	SDA	2-Wire Serial Interface Data.	
13	GND	Module Ground.	5
14	Rx3+	Receiver Non-Inverted Data Output. LAN3.	
15	Rx3-	Receiver Inverted Data Output. LAN3.	
16	GND	Module Ground.	5
17	Rx1+	Receiver Non-Inverted Data Output. LAN1.	
18	Rx1-	Receiver Inverted Data Output. LAN1.	
19	GND	Module Ground.	5
20	GND	Module Ground.	5
21	Rx2-	Receiver Inverted Data Output. LAN2.	
22	Rx2+	Receiver Non-Inverted Data Output. LAN2.	
23	GND	Module Ground.	5
24	Rx4-	Receiver Inverted Data Output. LAN4.	
25	Rx4+	Receiver Non-Inverted Data Output. LAN4.	
26	GND	Module Ground.	5
27	ModPrsL	The module is inserted into the indicate pin and grounded within the module.	3
28	IntL	Interrupt.	4
29	VccTx	+3.3V Transmitter Power Supply.	
30	Vcc1	+3.3V Power Supply.	
31	LPMode	Low-Power Mode.	5
32	GND	Module Ground.	5
33	Tx3+	Transmitter Non-Inverted Data Input. LAN3.	
34	Tx3-	Transmitter Inverted Data Input. LAN3.	

35	GND	Module Ground.	5
36	Tx1+	Transmitter Non-Inverted Data Input. LAN1.	
37	Tx1-	Transmitter Inverted Data Input. LAN1.	
38	GND	Module Ground.	5

Notes:

1. ModSelL is the input pin. The module responds to 2-wire serial communication commands when it is held “low” by the host. ModSelL allows multiple QSFP modules to be used on a single 2-wire interface bus. If ModSelL is “high,” the module will not respond to any 2-wire interface communication from the host. ModSelL has internal pull-up resistors in the module.
2. The module restart pin, when the low level on the ResetL pin lasts longer than the minimum pulse length, resets the module and restores all user modules to their default state. When performing reset device, the host should ignore all status bits. Until the module reset interrupt is completed, please note that, during hot plugging, the module will issue this information to complete the reset interrupt without resetting.
3. This pin is active “high,” indicating that the module is running under a low-power module. The signal has no effect on the functionality of this product.
4. IntL is the output pin, which is the open collector output and must be pulled up to Vcc with a 4.7kΩ to 10kΩ resistor on the motherboard. When it is “low,” it indicates that the module may malfunction. The host uses a 2-wire serial interface to identify the interrupt source.
5. The circuit ground is internally isolated from the chassis ground.

Electrical Pad Layout (QSFP28 End)

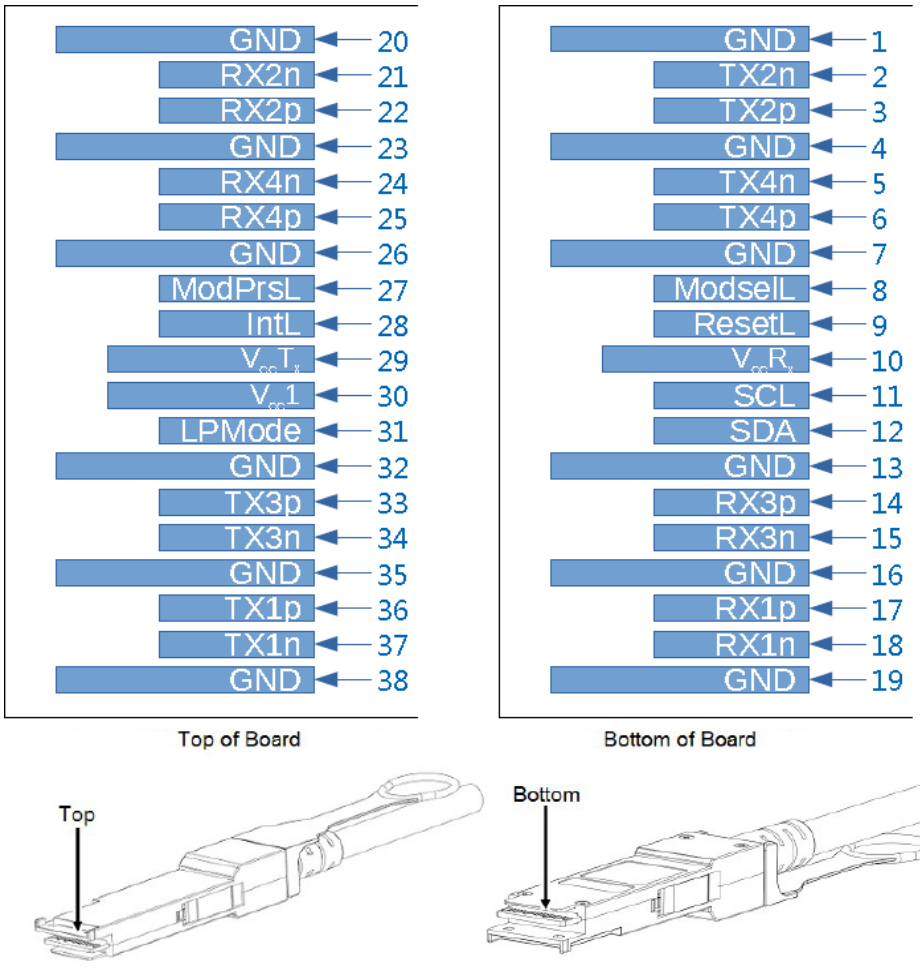

SFP28 Pin Descriptions

Pin	Symbol	Name/Description	Notes
1	VeeT	Transmitter Ground (Common with Receiver Ground).	
2	Tx_Fault	Not Used. Transmitter Failure Alarm.	1
3	Tx_Disable	Not Used. The signal turns off the module transmitter when it is “high” or “open.”	2
4	SDA	Data Line for Serial ID.	
5	SCL	Clock Line for Serial ID.	
6	MOD_ABS	Module Absent. Grounded within the module.	
7	RS0	No Connection Required.	1
8	LOS	Loss of Signal Indication. “Logic 0” indicates normal operation.	2
9	RS1	No Connection Required.	1
10	VeeR	Receiver Ground (Common with Transmitter Ground).	
11	VeeR	Receiver Ground (Common with Transmitter Ground).	
12	RD-	Receiver Inverted Data Out. AC Coupled.	
13	RD+	Receiver Non-Inverted Data Out. AC Coupled.	
14	VeeR	Receiver Ground (Common with Transmitter Ground).	
15	VccR	Receiver Power Supply.	
16	VccT	Transmitter Power Supply.	
17	VeeT	Transmitter Ground (Common with Receiver Ground).	
18	TD+	Transmitter Non-Inverted Data In. AC Coupled.	
19	TD-	Transmitter Inverted Data In. AC Coupled.	
20	VeeT	Transmitter Ground (Common with Receiver Ground).	

Notes:

1. The circuit ground is isolated from the chassis ground.
2. Should be pulled up with 4.7kΩ to 10kΩ on the host board to a voltage between 2V and 3.6V.

Electrical Pad Layout (SFP28 End)

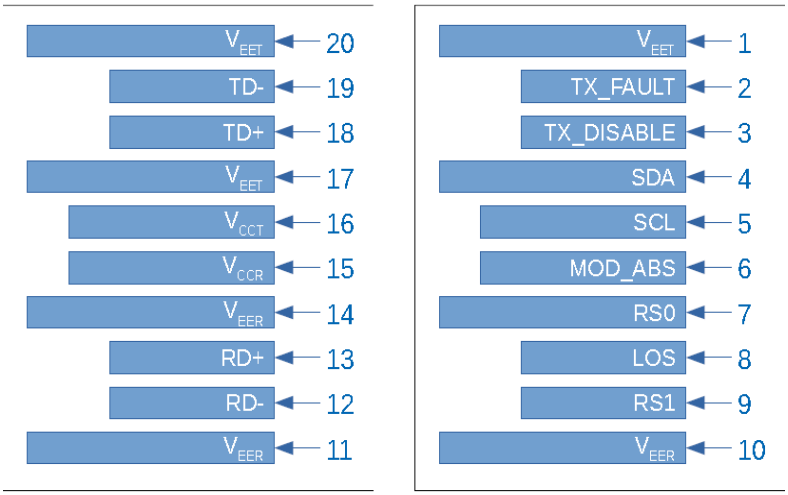

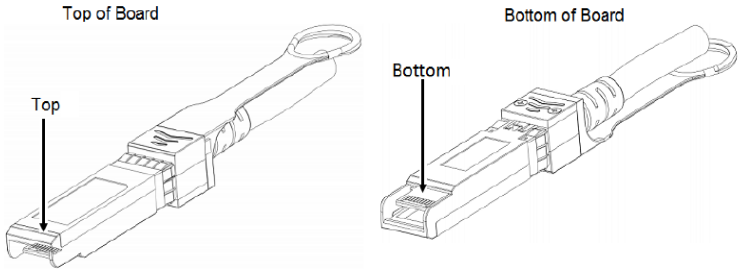

Mechanical Dimensions

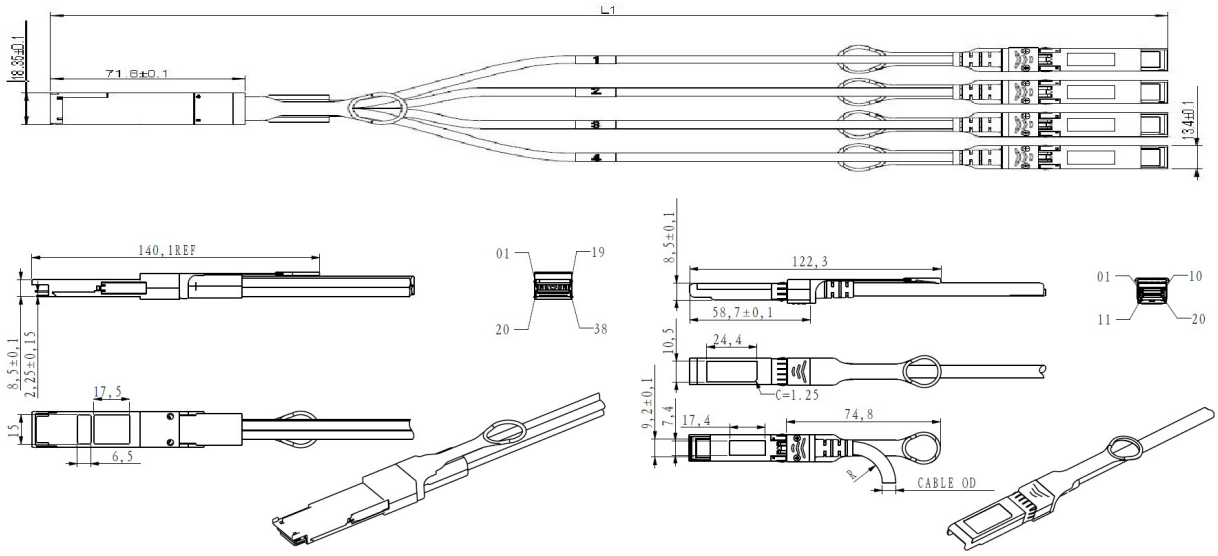

All Dimensions Are ±0.2mm Unless Otherwise Specified
Unit: mm

About AddOn Networks

In 1999, AddOn Networks entered the market with a single product. Our founders fulfilled a severe shortage for compatible, cost-effective optical transceivers that compete at the same performance levels as leading OEM manufacturers. Adhering to the idea of redefining service and product quality not previously had in the fiber optic networking industry, AddOn invested resources in solution design, production, fulfillment, and global support.

Combining one of the most extensive and stringent testing processes in the industry, an exceptional free tech support center, and a consistent roll-out of innovative technologies, AddOn has continually set industry standards of quality and reliability throughout its history.

Reliability is the cornerstone of any optical fiber network and is ingrained in AddOn's DNA. It has played a key role in nurturing the long-term relationships developed over the years with customers. AddOn remains committed to exceeding industry standards with certifications ranging from NEBS Level 3 to ISO 9001:2015 with every new development while maintaining the signature reliability of its products.



U.S. Headquarters

Email: sales@addonnetworks.com

Telephone: +1 877.292.1701

Fax: 949.266.9273

Europe Headquarters

Email: salesemea@addonnetworks.com

Telephone: +44 1285 842070