ADD-S28ARS28IN-O15M

Arista Networks® AOC-S-S-25G-15M to Intel® XXVAOCBL15M Compatible TAA 25GBase-AOC SFP28 to SFP28 Active Optical Cable (850nm, MMF, 15m)

Features:

- Hot-pluggable SFP28 form factor
- 850nm VCSEL laser and PIN photo-detector
- Supports 25Gbps data rate
- Single 3.3V power supply
- Power dissipation < 1W
- Internal CDR on both Transmitter and receiver channel
- Operating Case temperature: 0 to 70 Celsius
- Digital diagnostics functions are available via the I2C interface
- RoHS Compliant and Lead-Free



Applications:

- 25Gbase-SR Ethernet

Product Description

This Arista Networks® AOC-S-S-25G-15M to Intel® XXVAOCBL15M dual OEM compatible 25GBase-AOC SFP28 to SFP28 active optical cable has a maximum reach of 15.0m (49.2ft). It is 100% Arista Networks® to Intel® compatible and has been programmed, uniquely serialized, data-traffic and application tested to ensure that it is compliant and functional. This active optical cable will initialize and perform identically to Arista Networks® and Intel®'s individual cables and is built to meet or exceed Arista Networks® and Intel®'s specifications. This product complies with MSA (Multi-Source Agreement) standards and is TAA (Trade Acts Agreement) compliant. We stand behind the quality of our products and proudly offer a limited lifetime warranty.

AddOn's transceivers are RoHS compliant and lead-free.

TAA refers to the Trade Agreements Act (19 U.S.C. & 2501-2581), which is intended to foster fair and open international trade. TAA requires that the U.S. Government may acquire only "U.S.-made or designated country end products."

General Specifications

Parameter	Symbol	Min	Typ.	Max.	Unit
Storage Temperature		-40		85	°C
Operating Case Temperature	Tc	0		70	°C
Power Supply Voltage	Vcc	3.13	3.3	3.47	V
Supply Voltage	Vcc	0		3.6	V
Storage Temperature	Tstg	-40		85	°C
Operating Humidity		5		85	%

Optical Characteristics

Parameter		Symbol	Min.	Typ.	Max.	Unit	Notes
Transmitter							
Data Rate		BR		25.78		Gbps	
Centre Wavelength		λc	840	850	860	nm	
Spectral Width (-20dB)		σ			0.6	nm	
Average Output Power		Pavg	-8.4		2.4	dBm	
Optical Power OMA		P_{OMA}	-6.4		3	dBm	
Extinction Ratio		ER	2			dB	
Differential data input swing		$V_{IN,PP}$	40		1000	mV	
Input Differential Impedance		ZIN	90	100	110	Ω	
TX Disable	**Disable**		2.0		Vcc	V	
	Enable		0		0.8	V	
TX Fault	**Fault**		2.0		Vcc	V	
	Normal		0		0.8	V	
Receiver							
Data Rate		BR		25.78		Gbps	
Centre Wavelength		λc	840	850	860	nm	
Receiver Sensitivity (OMA)		Psens			-10	dBm	
Stressed Sensitivity (OMA)					-5.2	dBm	
Receiver Power (OMA)					3	dBm	
LOS De-Assert		LOS_D			-13	dBm	
LOS Assert		LOS_A	-30			dBm	
LOS Hysteresis			0.5			dB	
Differential data output swing		Vout,PP	500		1130	mV	
LOS	**High**		2.0		Vcc	V	
	Low				0.8	V	

Pin Descriptions

Pin	Logic	Symbol	Name/Description	Notes
1		VeeT	Transmitter Ground.	
2	LV-TTL-O	TX_Fault	N/A	1
3	LV-TTL-I	TX_DIS	Transmitter Disable.	
4	LV-TTL-I/O	SDA	2-Wire Serial Data.	
5	LV-TTL-I	SCL	2-Wire Serial Clock.	
6		MOD_DEF0	Module present, connect to VeeT.	
7	LV-TTL-I	RS0	N/A	1
8	LV-TTL-O	LOS	LOS of Signal.	
9	LV-TTL-I	RS1	N/A	1
10		VeeR	Receiver Ground.	
11		VeeR	Receiver Ground.	
12	CML-O	RD-	Receiver Data Inverted.	
13	CML-O	RD+	Receiver Data Non-inverted.	
14		VeeR	Receiver Ground.	
15		VccR	Receiver Supply +3.3V.	
16		VccT	Transmitter Supply +3.3V.	
17		VeeT	Transmitter Ground.	
18	CML-I	TD+	Transmitter Data Non-Inverted.	
19	CML_I	TD-	Transmitter Data Inverted.	
20		VeeT	Transmitter Ground.	

Note:

1. Signals not supported in SFP28 Copper pulled-down to VeeT with 30kΩ resistor.

Host Board

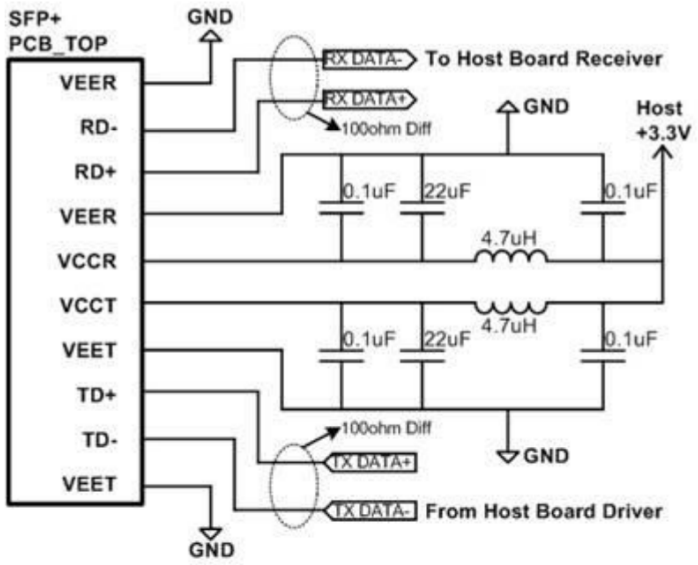
SFP+
PCB_TOP
GND
VEER
RD-
RD+
VEER
VCCR
VCCT
VEET
TD+
TD-
VEET
GND
RX DATA-
To Host Board Receiver
RX DATA+
100ohm Diff
GND
Host
+3.3V
0.1uF
22uF
0.1uF
4.7uH
4.7uH
0.1uF
22uF
0.1uF
100ohm Diff
TX DATA+
GND
TX DATA-
From Host Board Driver

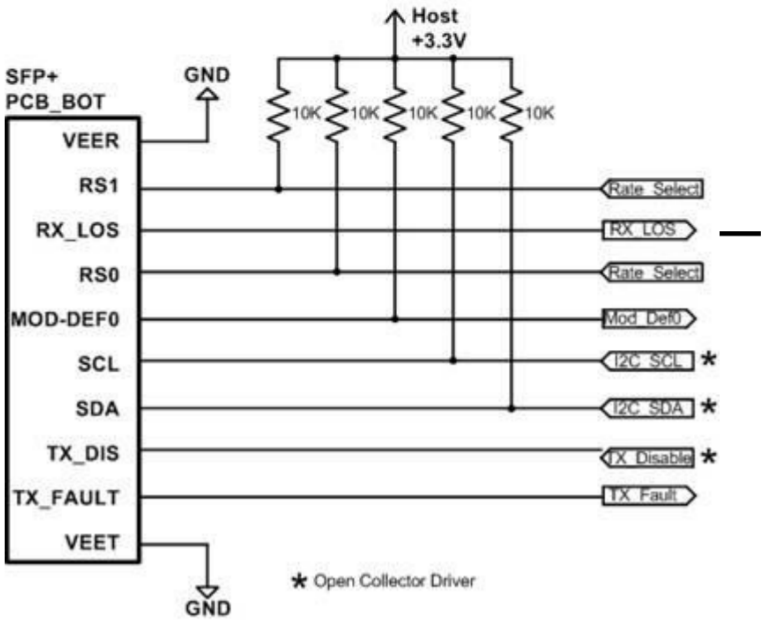
SFP+
PCB_BOT
GND
Host
+3.3V
10K
10K
10K
10K
10K
VEER
RS1
RX_LOS
RS0
MOD-DEF0
SCL
SDA
TX_DIS
TX_FAULT
VEET
GND
Rate_Select
RX_LOS
Rate_Select
Mod_Def0
I2C_SCL
I2C_SDA
TX_Disable
TX_Fault
* Open Collector Driver

Mechanical Specification

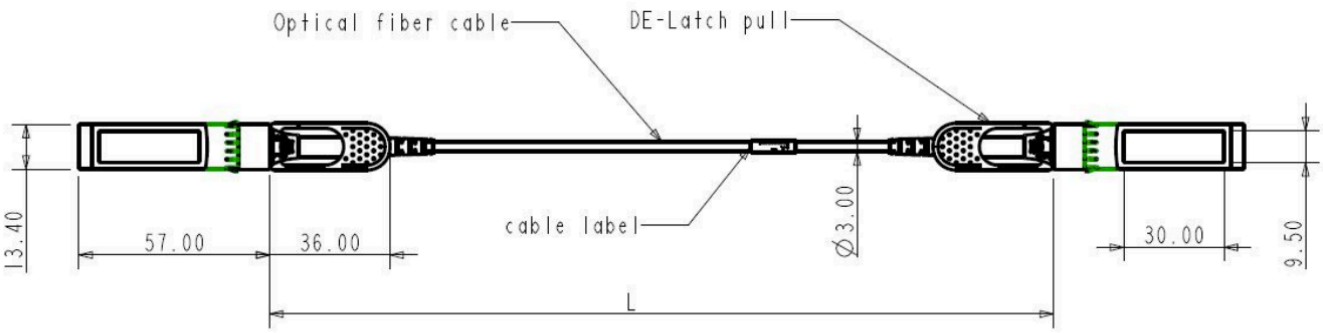

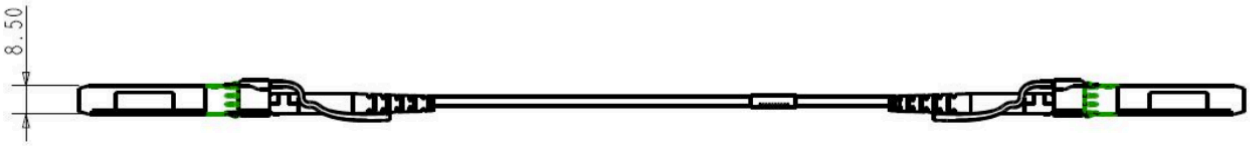

About AddOn Networks

In 1999, AddOn Networks entered the market with a single product. Our founders fulfilled a severe shortage for compatible, cost-effective optical transceivers that compete at the same performance levels as leading OEM manufacturers. Adhering to the idea of redefining service and product quality not previously had in the fiber optic networking industry, AddOn invested resources in solution design, production, fulfillment, and global support.

Combining one of the most extensive and stringent testing processes in the industry, an exceptional free tech support center, and a consistent roll-out of innovative technologies, AddOn has continually set industry standards of quality and reliability throughout its history.

Reliability is the cornerstone of any optical fiber network and is ingrained in AddOn's DNA. It has played a key role in nurturing the long-term relationships developed over the years with customers. AddOn remains committed to exceeding industry standards with certifications ranging from NEBS Level 3 to ISO 9001:2015 with every new development while maintaining the signature reliability of its products.



U.S. Headquarters

Email: sales@addonnetworks.com

Telephone: +1 877.292.1701

Fax: 949.266.9273

Europe Headquarters

Email: salesemea@addonnetworks.com

Telephone: +44 1285 842070