X2-ER

MSA Compliant 10GBase-ER X2 Transceiver (SMF, 1550nm, 40km, SC, DOM)

Features:

- X2 MSA 2.0 Compliance
- Duplex SC Connector
- Commercial Temperature 0 to 70 Celsius
- Single-mode Fiber
- Hot Pluggable
- Excellent ESD Protection
- Metal with Lower EMI
- RoHS Compliant and Lead Free

Applications:

- 8x/10x Fibre Channel
- 10GBase-ER Ethernet
- Access, Metro and Enterprise

Product Description

This MSA compliant X2 transceiver provides 10GBase-ER throughput up to 40km over single-mode fiber (SMF) using a wavelength of 1550nm via a SC connector. It is built to MSA standards and is uniquely serialized and data-traffic and application tested to ensure that they will integrate into your network seamlessly. Digital optical monitoring (DOM) support is also present to allow access to real-time operating parameters. We stand behind the quality of our products and proudly offer a limited lifetime warranty.

AddOn's transceivers are RoHS compliant and lead-free.

Absolute Maximum Ratings

Parameter	Symbol	Min.	Max.	Unit
Supply Voltage +5V	Vcc5		6.0	V
Supply Voltage_3.3V	Vcc3		4	V
Supply Voltage APS	Vaps		1.5	V
Storage Temperature	Tst	-20	85	°C
Optical Input Received Power	PIN		-1	dBm

Recommended Operating Conditions

Parameter	Symbol	Min.	Typ.	Max.	Unit
Operating Case Temperature	Tca	0		70	°C
Supply Voltage+5V	Vcc5	4.75	5	5.25	V
Supply Voltage+5V	Icc5			80	mA
Supply Voltage_3.3V	Vcc3	3.14	3.3	3.47	V
Supply Voltage+3.3V	Icc3			400	mA
Supply Voltage APS	Vaps	1.14	1.2	1.26	V
Supply Voltage APS	Iaps			700	mA
Module Power Dissipation	Pm			3.5	W

Signal Specification-Electrical

Parameter	Symbol	Min.	Typ.	Max.	Unit	Notes
1.2 V CMOS						
Input High Voltage	VIL(MAX)			0.36	V	
Input Low Voltage	VIH(MIN)	0.84		1.25	V	
Capacitance				320	pF	
Pull Up Resistance	Rpull	4.7k	10k	22k	Ohm	
MDIO I/O						
Output Low Voltage	VOL	-0.3		0.2	V	
Output Low Current	IOL			4	mA	
Input High Voltage	VIH	0.84		1.5	V	
Input Low Voltage	VIL	-0.3		0.36	V	
Pull-up Supply Voltage	VPULL	1.14	1.2	1.26		
Input Capacitance	CIN			10	Pf	
Load Capacitance	CLOD			470	Pf	
External Pull-up Resistance	EPULL	200			Ohm	

Electrical Characteristics

Parameter	Symbol	Min.	Typ.	Max.	Unit
Transmitter					
Data Rate (TXLINE0-3)	TX-xaul		3125		Mbps
Differential Impedance	Zo	80	100	120	Ω
Differential Input Amplitude	Vin P-P	160		2000	mVpp
Input Rise/Fall	TR/TF	60		130	ps
Differential Impedance of Zin	Zin		100		ohm
Receiver					
Data Rate (TXLINE0-3)	RX-xaul		3125		Mbps
Supply Voltage	VccRX	3.13	3.3	3.47	V
Differential Output Amplitude	Vout P-P	800		1600	mV
Rise/Fall Time	Tr/Tf	50		90	ps
Differential Impedance of Zout	Zout		100		ohm

Optical Characteristics

Parameter	Symbol	Min.	Typ.	Max.	Unit
Transmitter					
Center Wavelength	λc	1528	1550	1565	nm
Optical Transmit Power	Po	-1		2	dBm
Optical Transmit Power (disabled)	Ptx-dis			-40	dBm
Extinction Ratio	ER	8.2			dB
Side Mode Suppression Ratio	SMSR	30			dB
Side Mode Suppression Ratio	IEEE 802.3ae Compliant				
Receiver					
Input Operating Wavelength	λ	1260		1600	nm
Average Receive Power	Pavg	-15.8		-1.0	dBm
Receiver Sensitivity in 10.3Gbps (OMA)	Rsen1			-14.1	dBm
Stressed Receiver Sensitivity in 10.3Gbps (OMA)	Rsen2			-11.3	dBm
Reflectance	Rrx			-26	dB
LOS Asserted	Lsa	-28			dBm
LOS De-Asserted	Lda			-19	dBm
LOS Hysteresis	Lh	0.5			dB

Pin Descriptions

Pin	Symbol	Name/Descriptions	Ref.
1	GND	Electrical Ground.	1
2	GND	Electrical Ground.	1
3	GND	Electrical Ground.	1
4	5.0V	Power	2
5	3.3V	Power	2
6	3.3V	Power	2
7	APS =1.2V	Adaptive Power Supply.	2
8	APS =1.2V	Adaptive Power Supply.	2
9	LASI	Open Drain Compatible 10K-22K pull up on host. Logic High: Normal Operation Logic Low: LASI Asserted	3
10	RESET	Open Drain compatible. 10-22K pull-up on transceiver Logic high = Normal operation Logic low = Reset Minimum reset assert time 1 ms	3
11	VEND SPECIFIC	Vendor Specific Pin. Leave unconnected when not in use.	6
12	TX ON/OFF	Open Drain compatible. 10-22K pull-up on transceiver Logic high = Transmitter On (capable) Logic low = Transmitter Off (always)	3
13	RESERVED	Reserved	
14	MODE DETECT	Pulled low inside module through 1k	3
15	VEND SPECIFIC	Vendor Specific Pin. Leave unconnected when not in use.	6
16	VEND SPECIFIC	Vendor Specific Pin. Leave unconnected when not in use.	6
17	MDIO	Management Data IO	3,4
18	MDC	Management Data Clock	3,4
19	PRTAD4	Port Address Bit 4 (Low = 0)	3
20	PRTAD3	Port Address Bit 3 (Low = 0)	3
21	PRTAD2	Port Address Bit 2 (Low = 0)	3
22	PRTAD1	Port Address Bit 1 (Low = 0)	3
23	PRTAD0	Port Address Bit 0 (Low = 0)	3
24	VEND SPECIFIC	Vendor Specific Pin. Leave unconnected when not in use.	6
25	APS SET	Feedback input for APS	

26	RESERVED	Reserved for Avalanche Photodiode use.	6
27	APS SENSE	APS Sense Connection	
28	APS =1.2V	Adaptive Power Supply	2
29	APS =1.2V	Adaptive Power Supply	2
30	3.3V	Power	2
31	3.3V	Power	2
32	5.0V	Power	2
33	GND	Electrical Ground	1
34	GND	Electrical Ground	1
35	GND	Electrical Ground	1
36	GND	Electrical Ground	1
37	GND	Electrical Ground	1
38	RESERVED	Reserved	
39	RESERVED	Reserved	
40	GND	Electrical Ground	1
41	RX LANE0+	Module XAUI Output Lane 0+	5
42	RX LANE0-	Module XAUI Output Lane 0-	5
43	GND	Electrical Ground	1
44	RX LANE1+	Module XAUI Output Lane 1+	5
45	RX LANE1-	Module XAUI Output Lane 1-	5
46	GND	Electrical Ground	1
47	RX LANE2+	Module XAUI Output Lane 2+	5
48	RX LANE2-	Module XAUI Output Lane 2-	5
49	GND	Electrical Ground	1
50	RX LANE3+	Module XAUI Output Lane 3+	5
51	RX LANE3-	Module XAUI Output Lane 3-	5
52	GND	Electrical Ground	1
53	GND	Electrical Ground	1
54	GND	Electrical Ground	1
55	TX LANE0+	Module XAUI Input Lane 0+	5
56	TX LANE0-	Module XAUI Input Lane 0-	5
57	GND	Electrical Ground	1
58	TX LANE1+	Module XAUI Input Lane 1+	5
59	TX LANE1-	Module XAUI Input Lane 1-	5
60	GND	Electrical Ground	1

61	TX LANE2+	Module XAUI Input Lane 2+	5
62	TX LANE2-	Module XAUI Input Lane 2-	5
63	GND	Electrical Ground	1
64	TX LANE3+	Module XAUI Input Lane 3+	5
65	TX LANE3	Module XAUI Input Lane 3	5
66	GND	Electrical Ground	1
67	RESERVED	Reserved	
68	RESERVED	Reserved	
69	GND	Electrical Ground	1
70	GND	Electrical Ground	1

Notes:

1. Ground connections are common for TX and RX.
2. All connector contacts are rated at 0.5A nominal.
3. 1.2V CMOS compatible.
4. MDIO and MDC timing must comply with IEEE802.3ae, Clause 45.3.
5. XAUI output characteristics should comply with IEEE802.3ae Clause 47.
6. Transceivers will be MSA compliant when no signals are present on the vendor specific pins.

Electrical Pin-out Details

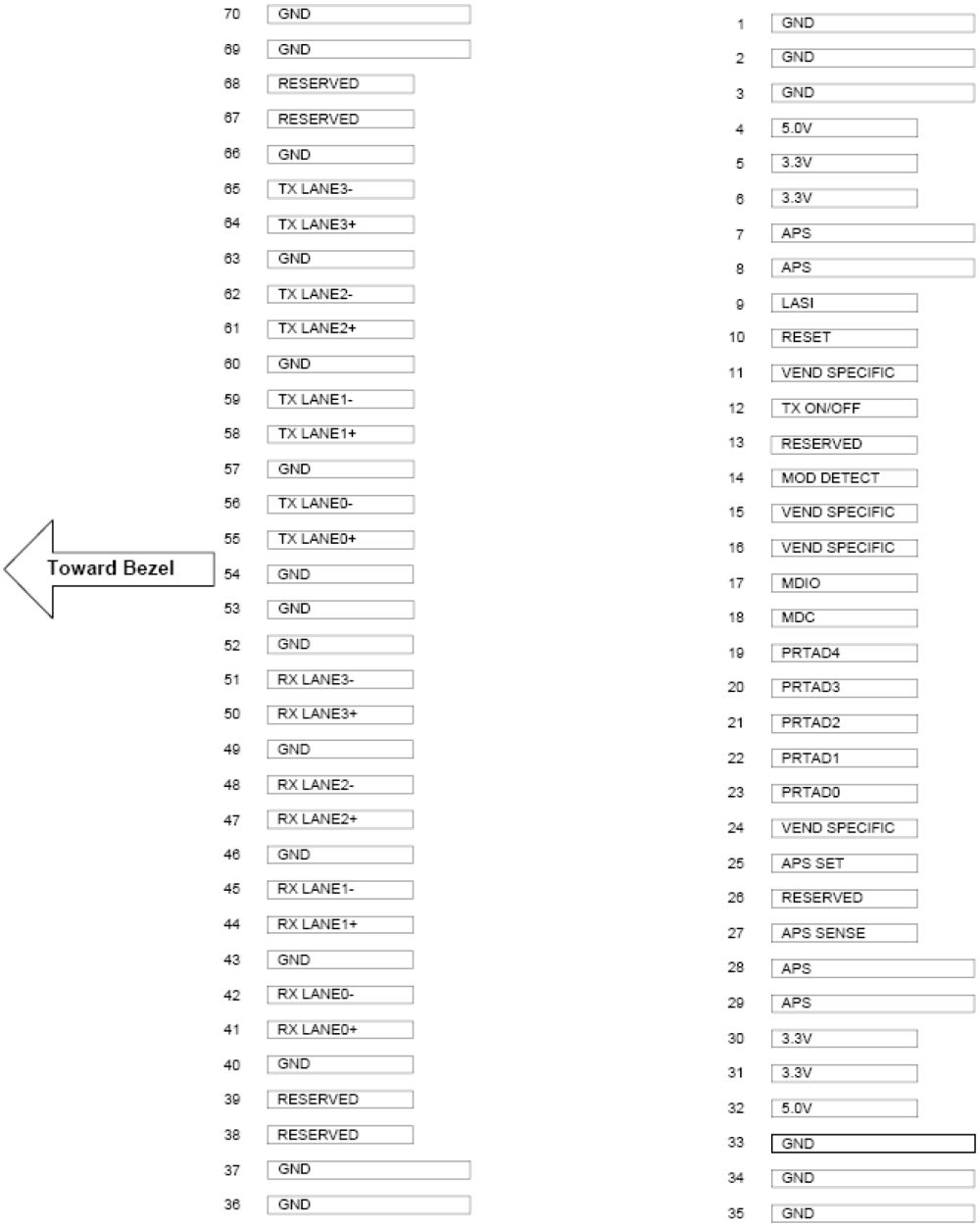

Functional Diagram

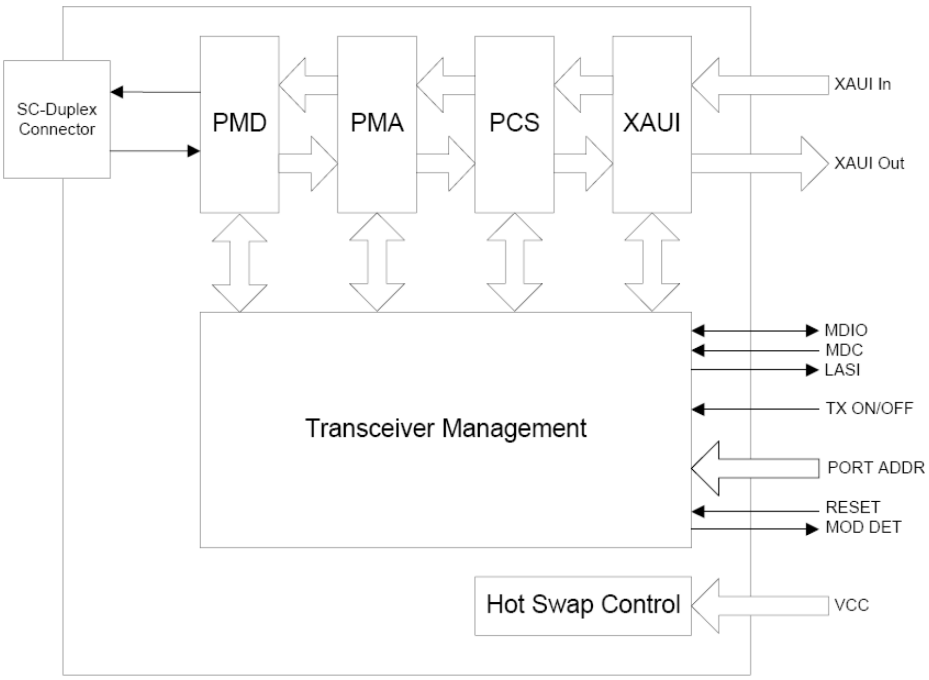

Mechanical Specifications

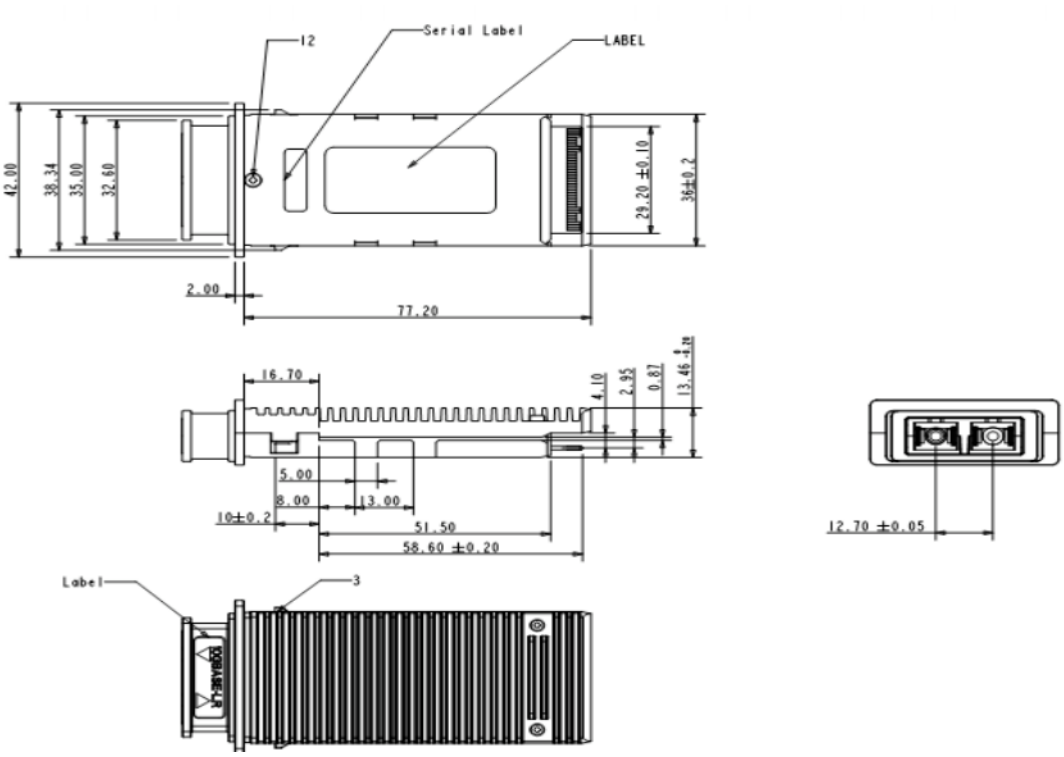

Dimensions in mm

About AddOn Networks

In 1999, AddOn Networks entered the market with a single product. Our founders fulfilled a severe shortage for compatible, cost-effective optical transceivers that compete at the same performance levels as leading OEM manufacturers. Adhering to the idea of redefining service and product quality not previously had in the fiber optic networking industry, AddOn invested resources in solution design, production, fulfillment, and global support.

Combining one of the most extensive and stringent testing processes in the industry, an exceptional free tech support center, and a consistent roll-out of innovative technologies, AddOn has continually set industry standards of quality and reliability throughout its history.

Reliability is the cornerstone of any optical fiber network and is ingrained in AddOn's DNA. It has played a key role in nurturing the long-term relationships developed over the years with customers. AddOn remains committed to exceeding industry standards with certifications ranging from NEBS Level 3 to ISO 9001:2015 with every new development while maintaining the signature reliability of its products.

U.S. Headquarters

Email: sales@addonnetworks.com

Telephone: +1 877.292.1701

Fax: 949.266.9273

Europe Headquarters

Email: salesemea@addonnetworks.com

Telephone: +44 1285 842070