SFP-10GB-DW30-40-AO

MSA Compliant 10GBase-DWDM SFP+ Transceiver C-Band 100GHz (SMF, 1553.33nm, 40km, LC, DOM)

Features:

- SFF-8432 and SFF-8472 Compliance
- Temperature-stabilized EML transmitter and PIN receiver
- Duplex LC Connector
- Commercial Temperature 0 to 70 Celsius
- Single-mode Fiber
- Hot Pluggable
- Excellent ESD Protection
- Metal with Lower EMI
- RoHS Compliant and Lead Free

Applications:

- 8x/10x Fibre Channel
- 10x Gigabit Ethernet over DWDM
- Access, Metro and Enterprise

Product Description

This MSA compliant SFP+ transceiver provides 10GBase-DWDM throughput up to 40km over single-mode fiber (SMF) using a wavelength of 1553.33nm via an LC connector. It can operate at temperatures between 0 and 70C. All of our transceivers are built to comply with Multi-Source Agreement (MSA) standards and are uniquely serialized and tested for data-traffic and application to ensure seamless network integration. Additional product features include Digital Optical Monitoring (DOM) support which allows access to real-time operating parameters. We stand behind the quality of our products and proudly offer a limited lifetime warranty.

AddOn's transceivers are RoHS compliant and lead-free.

Wavelength Guide (100GHz ITU-T Channel)

Channel #	Frequency (THz)	Center Wavelength (nm)
17	191.7	1563.86
18	191.8	1563.05
19	191.9	1562.23
20	192.0	1561.42
21	192.1	1560.61
22	192.2	1559.79
23	192.3	1558.98
24	192.4	1558.17
25	192.5	1557.36
26	192.6	1556.55
27	192.7	1555.75
28	192.8	1554.94
29	192.9	1554.13
30	193.0	1553.33
31	193.1	1552.52
32	193.2	1551.72
33	193.3	1550.92
34	193.4	1550.12
35	193.5	1549.32
36	193.6	1548.51
37	193.7	1547.72
38	193.8	1546.92
39	193.9	1546.12
40	194.0	1545.32
41	194.1	1544.53
42	194.2	1543.73
43	194.3	1542.94
44	194.4	1542.14
45	194.5	1541.35
46	194.6	1540.56
47	194.7	1539.77
48	194.8	1538.98
49	194.9	1538.19

50	195.0	1537.40
51	195.1	1536.61
52	195.2	1535.82
53	195.3	1535.04
54	195.4	1534.25
55	195.5	1533.47
56	195.6	1532.68
57	195.7	1531.90
58	195.8	1531.12
59	195.9	1530.33
60	196.0	1529.55
61	196.1	1528.77

Absolute Maximum Ratings

Parameter	Symbol	Min.	Typ	Max.	Unit
Storage Temperature	Tstg	-40		85	^{o}C
Supply Voltage	Vcc	-0.5		4.0	V
Operating Case Temperature	Tc	0	25	70	^{o}C
Relative Humidity	RH	5		95	%
Data Rate			10.3125		Gbps

Electrical Characteristics

Parameter		Symbol	Min.	Typ.	Max.	Unit	Notes
Supply Voltage		Vcc	3.135	3.3	3.465	V	
Module Supply Current		Icc			450	mA	
Power Dissipation		P_D			1500	mW	
Transmitter							
Input Differential Impedance		Zin		100		Ω	
Differential Data Input Swing		Vin,p-p	180		700	mVp-p	
TX_FAULT	**Transmitter Fault**	V_{OH}	2.0		VccHost	V	
	Normal Operation	V_{OL}	0		0.8	V	
TX_DISABLE	**Transmitter Disable**	VIH	2.0		VccHost	V	
	Transmitter Enable	VIL	0		0.8	V	
Receiver							
Output Differential Impedance		Zo		100		Ω	
Differential Data Output Swing		Vout,p-p	300		850	mVp-p	1
Data Output Rise Time, Fall Time		tr, tf	28			ps	2
RX_LOS	**Loss of Signal (LOS)**	VOH	2.0		VccHost	V	3
	Normal Operation	VOL	0		0.8	V	3

Notes:

1. Internally AC coupled, but requires an external 100Ω differential load termination.
2. 20-80%.
3. LOS is an open collector output. Should be pulled up with 4.7KΩ on the host board.

Optical Characteristics

Parameter	Symbol	Min.	Typ.	Max.	Unit	Notes
Transmitter						
Launch Optical Power	PO	-1		4	dBm	1
Center Wavelength Range	λc	1528.77		1563.86	nm	
Center Wavelength Spacing			100		GHZ	
Center Wavelength Tolerance	Δλc	-100		100	pm	
Extinction Ratio	EX	8.2			dB	
Side Mode Suppression Ratio	SMSR	30			dB	
Transmitter and Dispersion Penalty	TDP			2.0	dB	
Relative Intensity Noise	RIN			-128	dB/Hz	
Optical Return Loss Tolerance	ORLT			21	dB	
Pout @ TX-Disable Asserted	Poff			-30	dBm	
Eye Diagram	IEEE Std 802.3-2005 10Gb Ethernet 10GBASE-ER compatible					
Receiver						
Center Wavelength	λc	1528		1565	nm	
Receiver Sensitivity (P_{avg})	S			-15	dBm	
Receiver Overload (P_{avg})	POL	-1			dBm	
Optical Return Loss	ORL	26			dB	
LOS De-Assert	LOSD			-16	dBm	
LOS Assert	LOSA	-35			dBm	
LOS Hysteresis		0.5			dB	

Notes:

1. The optical power is launched into 9/125µm SMF.
2. Measured with a PRBS 2^{31}-1 test pattern @10.3125Gbps.
3. Measured with PRBS 2^{31}-1 test pattern, 10.3125Gb/s, BER<10^{-12}.
4. Comply with IEEE 802.3-2005.

Pin Descriptions

Pin	Symbol	Name/Descriptions	Ref.
1	VeeT	Transmitter Ground.	1
2	TX_Fault	Transmitter Fault (LVTTL-O) - High indicates a fault condition.	2
3	TX_Disable	Transmitter Disable (LVTTL-I) – High or open disables the transmitter.	3
4	SDA	Two wire serial interface Data Line (LVCMOS-I/O) (MOD-DEF2).	4
5	SCL	Two wire serial interface Clock Line (LVCMOS-I/O) (MOD-DEF1)	4
6	MOD_ABS	Module Absent (Output), connected to VeeT or VeeR in the module.	5
7	RS0	Rate Select 0 – Not used, Presents high input impedance.	
8	RX_LOS	Receiver Loss of Signal (LVTTL-O).	2
9	RS1	Rate Select 1 – Not used, Presents high input impedance.	
10	VeeR	Receiver Ground.	1
11	VeeR	Receiver Ground.	1
12	RD-	Inverse Received Data out (CML-O).	
13	RD+	Received Data out (CML-O).	
14	VeeR	Receiver Ground.	
15	VccR	Receiver Power - +3.3V.	
16	VccT	Transmitter Power - +3.3 V.	
17	VeeT	Transmitter Ground.	1
18	TD+	Transmitter Data In (CML-I).	
19	TD-	Inverse Transmitter Data In (CML-I).	
20	VeeT	Transmitter Ground.	1

Notes:

1. The module signal grounds are isolated from the module case.
2. This is an open collector/drain output that on the host board requires a 4.7KΩ to 10KΩ pull-up resistor to VccHost.
3. This input is internally biased high with a 4.7KΩ to 10KΩ pull-up resistor to VccT.
4. 2-Wire Serial interface clock and data lines require an external pull-up resistor dependent on the capacitance load.
5. This is the ground return that on the host board requires a 4.7KΩ to 10KΩ pull-up resistor to VccHost.

Host PCB SFP+ Pad Assignment Top View

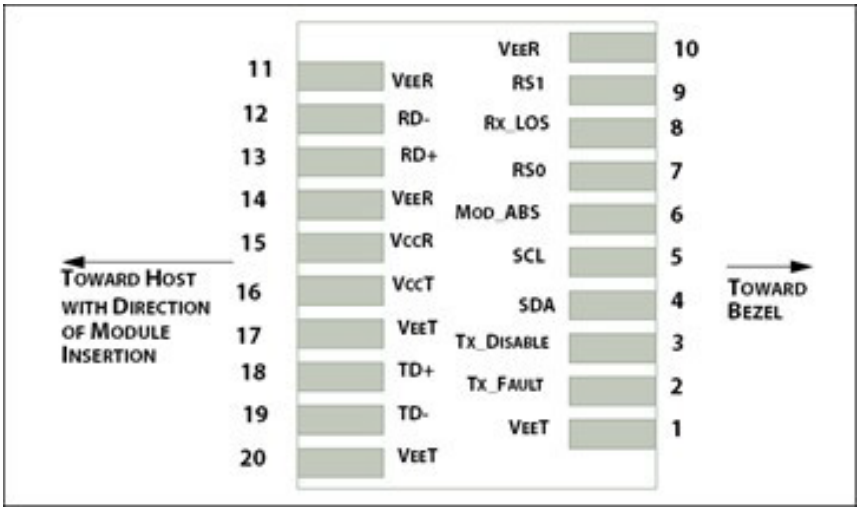

Recommended Host Board Power Supply Filter Network

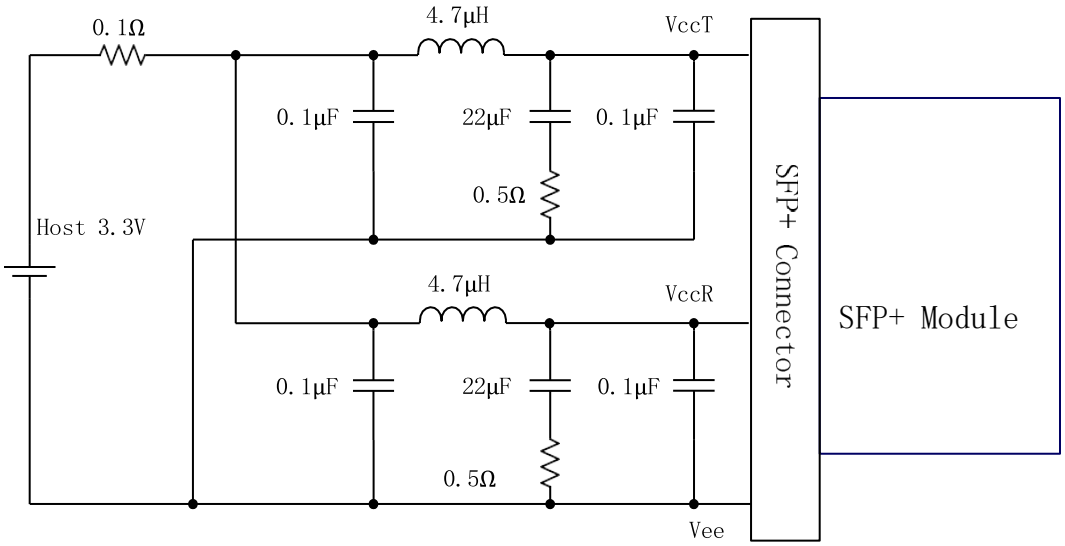

Recommended Application Interface Block Diagram

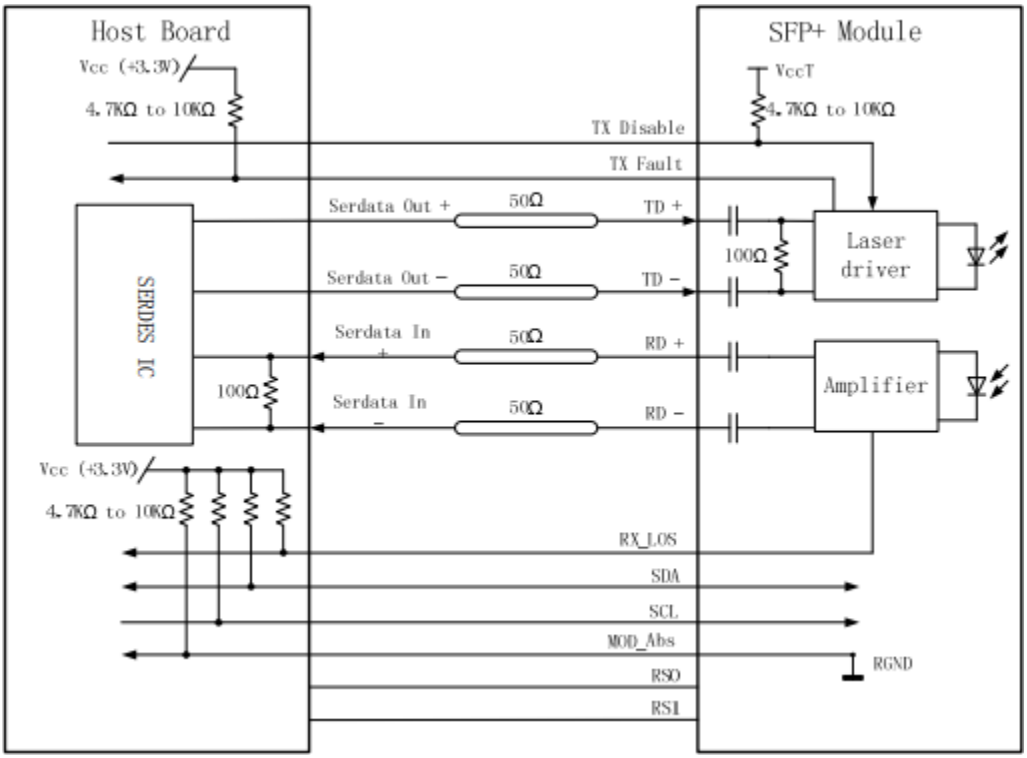

Mechanical Specifications

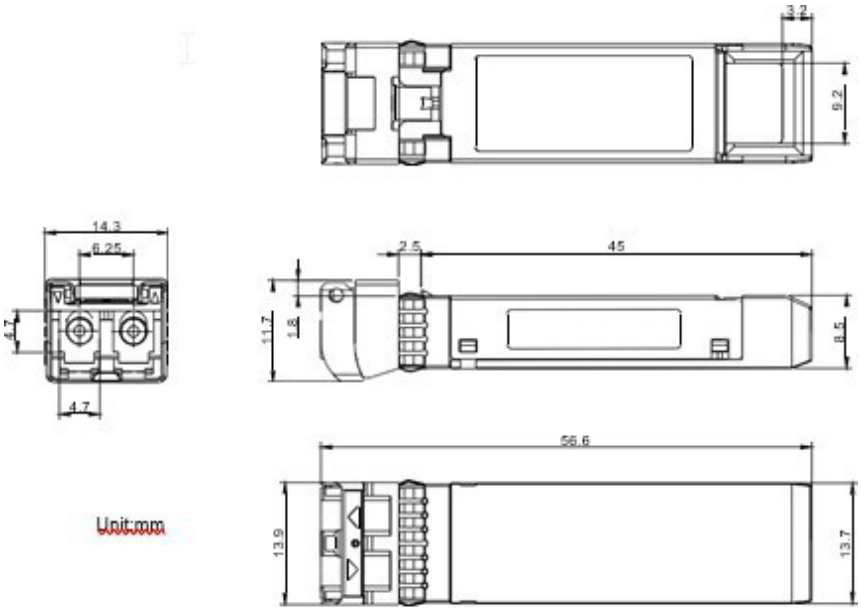

PCB Layout Recommendation

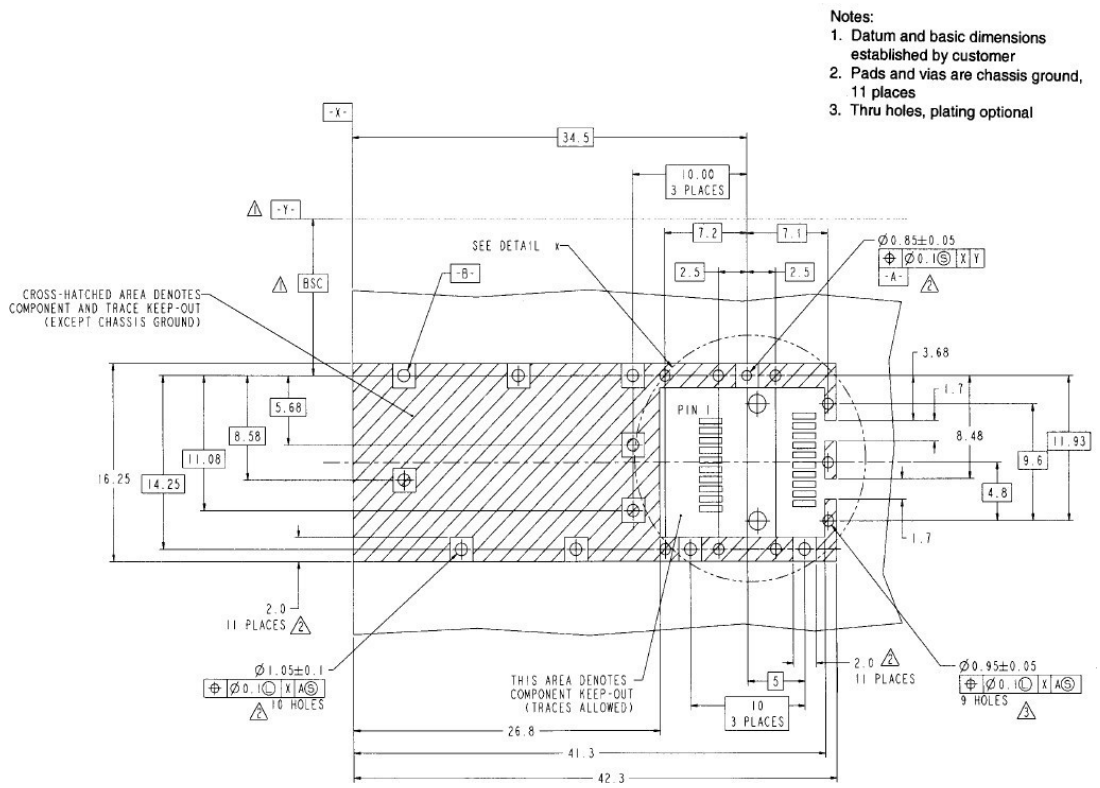

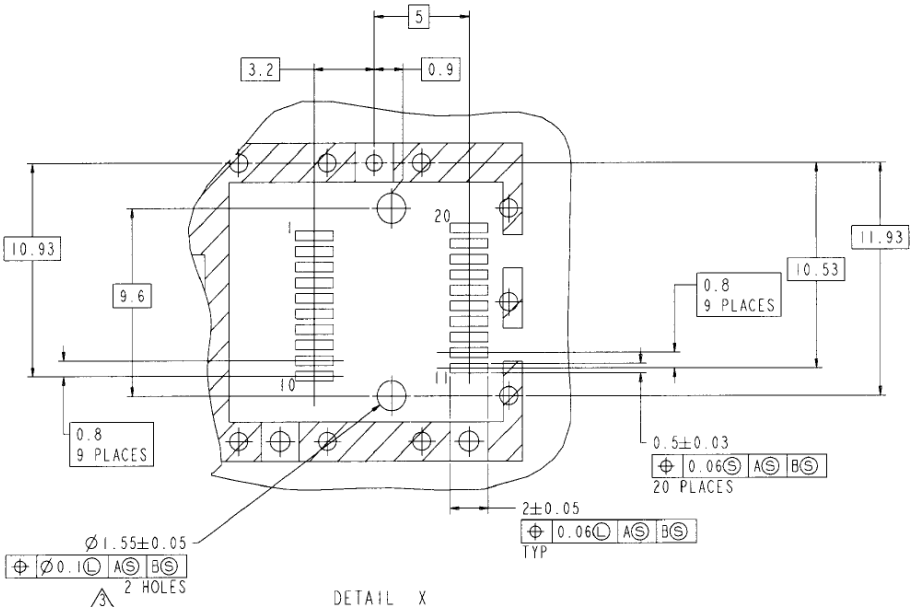

About AddOn Networks

In 1999, AddOn Networks entered the market with a single product. Our founders fulfilled a severe shortage for compatible, cost-effective optical transceivers that compete at the same performance levels as leading OEM manufacturers. Adhering to the idea of redefining service and product quality not previously had in the fiber optic networking industry, AddOn invested resources in solution design, production, fulfillment, and global support.

Combining one of the most extensive and stringent testing processes in the industry, an exceptional free tech support center, and a consistent roll-out of innovative technologies, AddOn has continually set industry standards of quality and reliability throughout its history.

Reliability is the cornerstone of any optical fiber network and is ingrained in AddOn's DNA. It has played a key role in nurturing the long-term relationships developed over the years with customers. AddOn remains committed to exceeding industry standards with certifications ranging from NEBS Level 3 to ISO 9001:2015 with every new development while maintaining the signature reliability of its products.

U.S. Headquarters

Email: sales@addonnetworks.com

Telephone: +1 877.292.1701

Fax: 949.266.9273

Europe Headquarters

Email: salesemea@addonnetworks.com

Telephone: +44 1285 842070