XFP-10GB-CW47-80-AO

MSA Compliant 10GBase-CWDM XFP Transceiver (SMF, 1470nm, 80km, LC, DOM)

Features:

- INF-8077i Compliance
- Duplex LC Connector
- Commercial Temperature 0 to 70 Celsius
- Single-mode Fiber
- Hot Pluggable
- Excellent ESD Protection
- Metal with Lower EMI
- RoHS Compliant and Lead Free

Applications:

- 8x/10x Fibre Channel
- 10x Gigabit Ethernet over CWDM
- Access, Metro and Enterprise
- Mobile Fronthaul CPRI/OBSAI

Product Description

This MSA compliant XFP transceiver provides 10GBase-CWDM throughput up to 80km over single-mode fiber (SMF) using a wavelength of 1470nm via an LC connector. It can operate at temperatures between 0 and 70C. The listed reach has been determined using a link budget calculation and tested in a standard environment. Actual link distances achieved will be dependent upon the deployed environment. All of our transceivers are built to comply with Multi-Source Agreement (MSA) standards and are uniquely serialized and tested for data-traffic and application to ensure seamless network integration. Additional product features include Digital Optical Monitoring (DOM) support which allows access to real-time operating parameters. We stand behind the quality of our products and proudly offer a limited lifetime warranty.

AddOn's transceivers are RoHS compliant and lead-free.

Regulatory Compliance

- ESD to the Electrical PINs: compatible with MIL-STD-883E Method 3015.4
- ESD to the LC Receptacle: compatible with IEC 61000-4-3
- EMI/EMC compatible with FCC Part 15 Subpart B Rules, EN55022:2010
- Laser Eye Safety compatible with FDA 21CFR, EN60950-1& EN (IEC) 60825-1,2
- RoHS compliant with EU RoHS 2.0 directive 2015/863/EU

CWDM Available Wavelengths

Wavelengths	Min.	Typ.	Max.
1470	1463.5	1470	1476.5
1490	1483.5	1490	1496.5
1510	1503.5	1510	1516.5
1530	1523.5	1530	1536.5
1550	1543.5	1550	1556.5
1570	1563.5	1570	1576.5
1590	1583.5	1590	1596.5
1610	1603.5	1610	1616.5

Absolute Maximum Ratings

Parameter	Symbol	Min.	Max.	Unit
Maximum Supply Voltage	Vcc3	-0.5	3.6	V
	Vcc5	-0.5	6	V
Storage Temperature	TS	-40	85	°C
Operating Temperature	TO	-5	70	°C
Operating Humidity	RH	5	85	%
Receiver power	R_{MAX}		-7	dBm
Maximum bitrate	B_{max}		11.3	Gbps

Electrical Characteristics (TOP=25°C, Vcc=3.3Volts)

Parameter	Symbol	Min.	Typ.	Max.	Unit	Notes
Power Supply Voltage	Vcc3	3.15	3.30	3.43	V	
	Vcc5	4.75	5.0	5.25	V	
Power Supply Current	Icc			1061	mA	
Power Consumption	P_{DISS}			3.5	W	
Transmitter						
Differential data input swing	Vin,pp	120		850	mV	
Input differential impedance	Zin	80	100	120	Ω	
Receiver						
Differential data output swing	Vout, pp	300		850	mV	
Output differential impedance	Zin	80	100	120	Ω	

Optical Characteristics

Parameter	Symbol	Min.	Typ.	Max.	Unit	Notes
Transmitter						
Optical Power (average)	P_{AVE}	0		4	dBm	1
Transmitter and Dispersion Penalty	TDP			3.5	dB	
Optical Extinction Ratio	ER	9			dB	
Optical Wavelength	Tλ	x-6.5	x	x+6.5	nm	
Insertion loss	IL		0.35			
Receiver						
Receiver Sensitivity (average)	R_{AVE}			-23	dBm	2
Receiver overload	P_{max}	-8			dBm	3
Receiver wavelength	Rλ	1260		1620	nm	

Notes:

1. Coupled into a Single mode fibre
2. Average power, back-to-back, @10.31Gbps, BER $1E^{-12}$, PRBS 2^{31}-1.
3. Exceeding the Receiver overload can physically damage the module. Please use appropriate attenuation.

Pin Descriptions

Pin	Symbol	Name/Descriptions	Ref.
1	GND	Module Ground	
2	Vee5	(not required)	
3	MOD_DESEL	Module De-select; When Held low allows the module to respond to 2-wire serial interface. LVTTL-I	
4	/INTERRUPT	Interrupt; Indicates presence of an important condition which can be read via the 2-wire serial interface. LVTTL-O	2
5	TX_DIS	Transmitter Disable. Logic1 indicates laser output disabled, LVTTL-I	
6	VCC5	+5V Power Supply (Not required)	
7	GND	Module Ground	1
8	VCC3	+3.3V Power Supply	
9	VCC3	+3.3V Power Supply	
10	SCL	2-Wire Serial Interface Clock. LVTTL-I	2
11	SDA	2-Wire Serial Interface Data Line. LVTTL-I/O	2
12	MOD_Abs	Indicates Module is not present. Grounded in the Module. LVTTL-O	2
13	MOD_NR	Module Not Ready; Indicating Module Operational Fault. Open-collector. LVTTL-O	2
14	RX_LOS	Loss of Signal indication. Logic 1 indicates loss of Signal. Open-collector. LVTTL-O	2
15	GND	Module Ground	1
16	GND	Module Ground	1
17	RD-	Receiver Inverted Data Output. CML-O	
18	RD+	Receiver Non-Inverted Data Output. CML-O	
19	GND	Module Ground	1
20	VCC2	+1.8V Power Supply (Not required).	3
21	P_DOWN/RST	Power down; When high, requires the module to limit power consumption to 1.5W or below. 2-Wire serial interface must be functional in the low power mode. LVTTL-I	
		Reset; The falling edge initiates a complete reset of the module including the 2-wire serial interface, equivalent to a power cycle. LVTTL-I	
22	VCC2	+1.8V Power Supply (Not required)	3
23	GND	Module Ground	1
24	REFCLK+	Reference Clock (Not required)	
25	REFCLK-	Reference Clock (Not required)	
26	GND	Module Ground	1
27	GND	Module Ground	1
28	TD-	Transmitter Inverted Data Input. CML-I	
29	TD+	Transmitter Non-Inverted Data Input. CML-I	
30	GND	Module Ground	1

Notes:

1. Module ground pins GND are isolated from the module case and chassis ground within the module.
2. Open collector; should be pulled up with 4.7K-10Kohms to a voltage between 3.15V and 3.6V on the host board.
3. The pins are open within module.

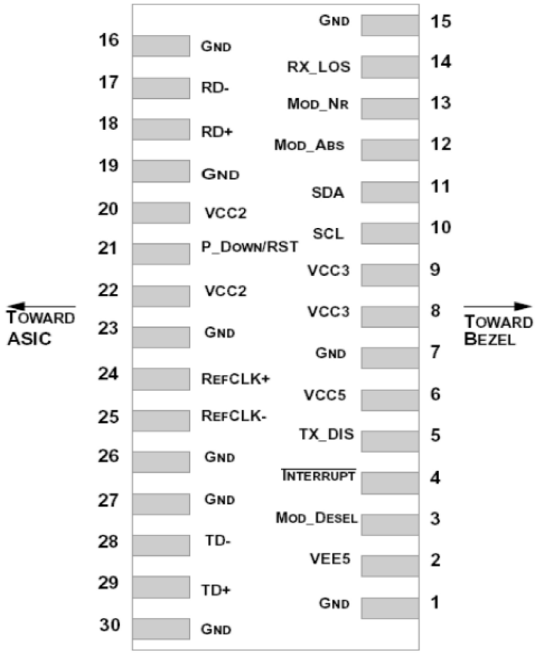

Pin-out of connector Block on Host board

Recommended Circuit Schematic

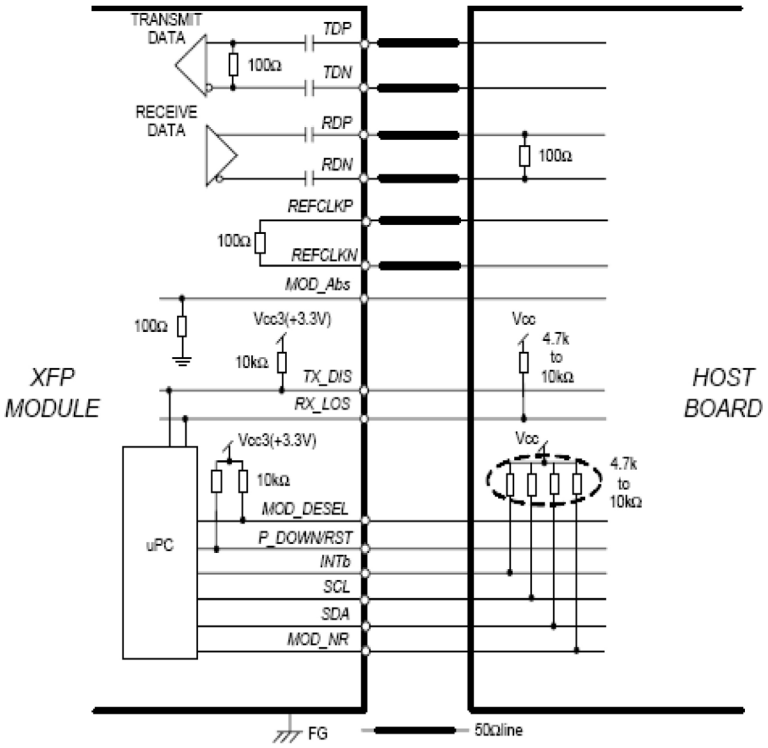

Mechanical Specifications

Small Form Factor Pluggable (XFP) transceivers are compatible with the dimensions defined by the XFP Multi-Sourcing Agreement (MSA).

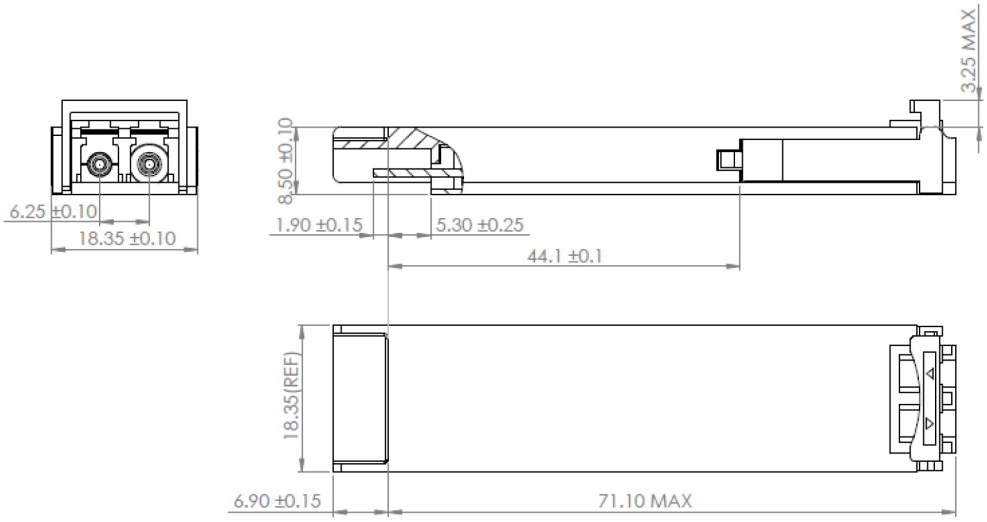

EEPROM Information

Management Interface

XFP 2-wire serial interface is specified in the Chapter 4 of the XFP MSA specification. The XFP 2-wire serial interface is used for serial ID, digital diagnostics, and certain control functions. The 2-wire serial interface is mandatory for all XFP modules. The 2-wire serial interface address of the XFP module is 1010000X(A0h). In order to access to multiple modules on the same 2-wire serial bus, the XFP has a MOD_DESEL(module deselect pin). This pin (which is pull high or deselected in the module) must be held low by the host to select of interest and allow communication over 2-wire serial interface. The module must not respond to or accept 2-wire serial bus instructions unless it is selected.

XFP Management Interface

XFP Management interface is specified in the Chapter 5 of the XFP MSA specification. The Figure 1 shows the structure of the memory map. The normal 256 Byte address space is divided into lower and upper blocks of 128 Bytes. The lower block of 128 Byte is always directly available and is used for the diagnostics and control functions that must be accessed repeatedly. Multiple blocks of memories are available in the upper 128 Bytes of the address space. These are individually addressed through a table select Byte which the user enters into a location in the lower address space. The upper address space tables are used for less frequently accessed functions and control space for future standards definition.

EEPROM memory map specific data field description is as below:

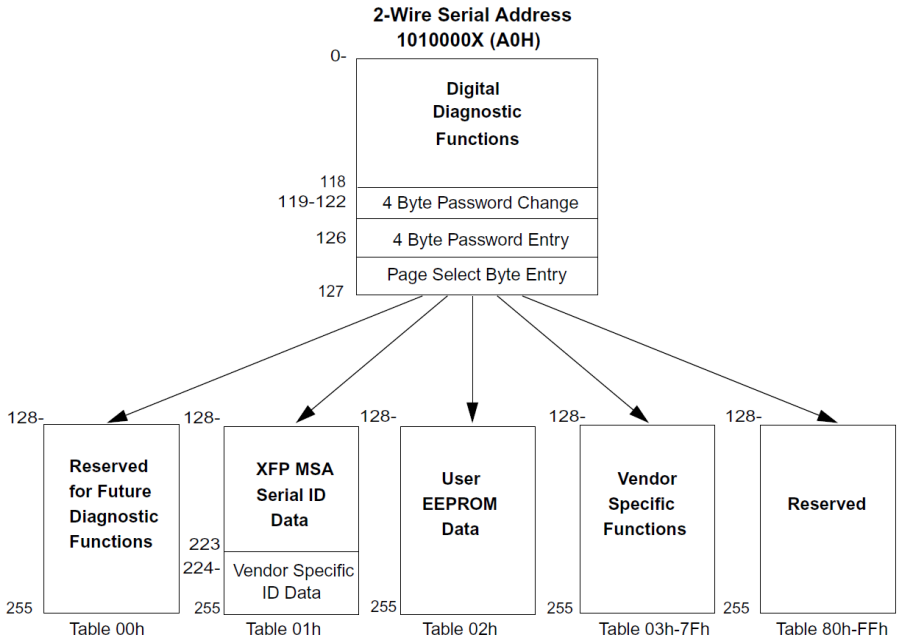

About AddOn Networks

In 1999, AddOn Networks entered the market with a single product. Our founders fulfilled a severe shortage for compatible, cost-effective optical transceivers that compete at the same performance levels as leading OEM manufacturers. Adhering to the idea of redefining service and product quality not previously had in the fiber optic networking industry, AddOn invested resources in solution design, production, fulfillment, and global support.

Combining one of the most extensive and stringent testing processes in the industry, an exceptional free tech support center, and a consistent roll-out of innovative technologies, AddOn has continually set industry standards of quality and reliability throughout its history.

Reliability is the cornerstone of any optical fiber network and is ingrained in AddOn's DNA. It has played a key role in nurturing the long-term relationships developed over the years with customers. AddOn remains committed to exceeding industry standards with certifications ranging from NEBS Level 3 to ISO 9001:2015 with every new development while maintaining the signature reliability of its products.

U.S. Headquarters

Email: sales@addonnetworks.com

Telephone: +1 877.292.1701

Fax: 949.266.9273

Europe Headquarters

Email: salesemea@addonnetworks.com

Telephone: +44 1285 842070