ADD-QJUQMU-PDAC1M

Juniper Networks® JNP-QSFP-DAC-1M to Multiple OEM Compatible TAA Compliant 40GBase-CU QSFP+ to QSFP+ Direct Attach Cable (Passive Twinax, 1m)

Features:

- Full duplex 4 channel parallel passive optical cable
- SFF-8436 QSFP+ compliant
- Transmission data rate up to 10.3Gbps per channel
- Low power consumption
- Housing isolated from connector ground
- Hot pluggable electrical interface
- 3.3V power supply voltage
- Operating Temperature: 0 to 70 Celsius
- RoHS Compliant and Lead-Free



Applications:

- Serial Data Transmission
- 40GBase Ethernet

Product Description

This Juniper Networks® JNP-QSFP-DAC-1M to multiple OEM compatible 40GBase-CU QSFP+ to QSFP+ passive TAA (Trade Acts Agreement) compliant direct attach cable has a maximum reach of 1.0m (3.3ft). It is 100% Juniper Networks® compatible and has been programmed to allow for connection to multiple OEMs. These OEMs include Avago, D-Link, Edge-corE, F5 Networks, Finisar, Fortinet, Linksys, Mellanox, NetAPP, Zyxel and more. This cable is also uniquely serialized and data-traffic and application tested to ensure that it is compliant and functional. This direct attach cable will initialize and perform identically to Juniper Networks® and the multiple OEM's individual cables and is built to meet or exceed Juniper Networks®'s specifications, and comply with MSA (Multi-Source Agreement) standards. We stand behind the quality of our products and proudly offer a limited lifetime warranty.

AddOn's transceivers are RoHS compliant and lead-free.

TAA refers to the Trade Agreements Act (19 U.S.C. & 2501-2581), which is intended to foster fair and open international trade. TAA requires that the U.S. Government may acquire only "U.S.-made or designated country end products."

Specifications

Parameter	Specifications	Unit
Minimum Dielectric Withstand Voltage	300	VDC
Insulation Resistance	1000	MΩ
Current Rating	0.5 Amp Minimum/Signal Contact	
Operating Temperature	0 to 70	°C
Flammability Rating (Plastics)	UL 94	
Shield	Braid/Foil	
Connector		
Back Shell Material	Nickel-Plated Zinc Diecast	
Contact Material	PCB with Gold-Plated Pads	
Maximum Insertion Force	40	N
Maximum Withdrawal Force	30	N
Durability	250	Cycles
Tightest Recommended Vertical Spacing (Belly-to-Belly)	11.80	mm
Tightest Recommended Vertical Spacing (Stacked)	17.50	mm
Cable		
Conductor	Solid	
Wire Gauge	28	AWG
Impedance	100±5	Ω
Construction	Twinaxial	
Jacket Type	PVC	

Mechanical Specifications

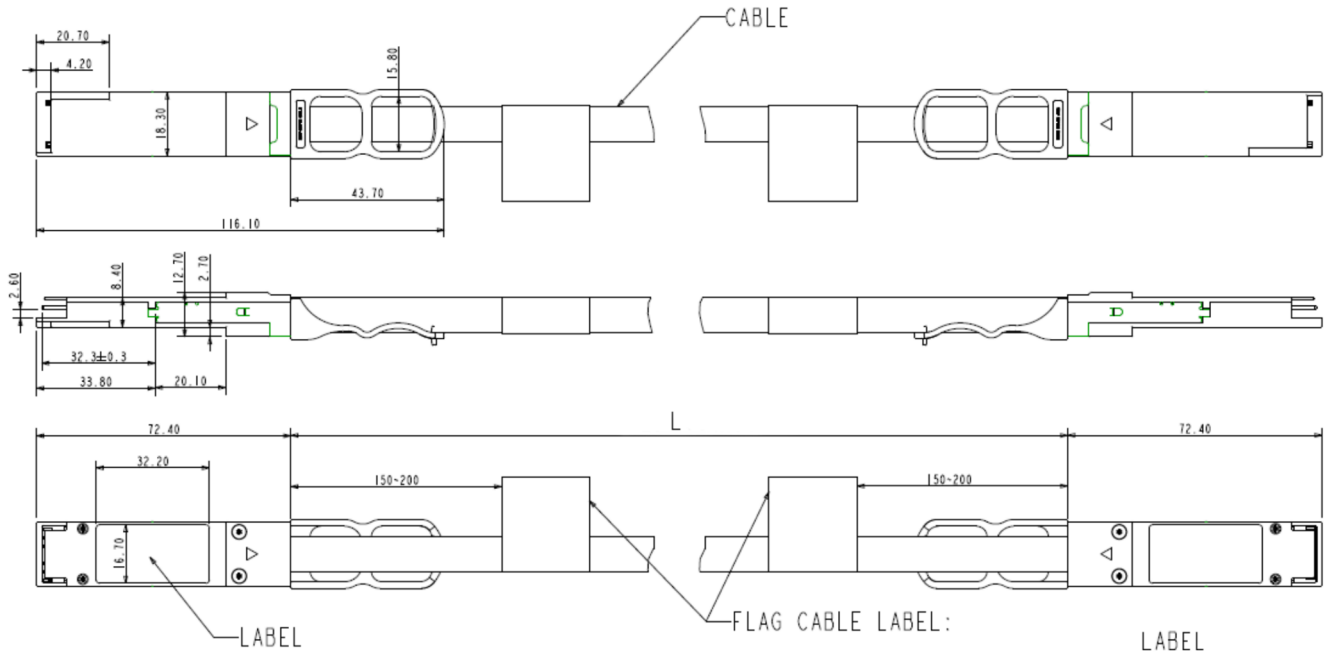

About AddOn Networks

In 1999, AddOn Networks entered the market with a single product. Our founders fulfilled a severe shortage for compatible, cost-effective optical transceivers that compete at the same performance levels as leading OEM manufacturers. Adhering to the idea of redefining service and product quality not previously had in the fiber optic networking industry, AddOn invested resources in solution design, production, fulfillment, and global support.

Combining one of the most extensive and stringent testing processes in the industry, an exceptional free tech support center, and a consistent roll-out of innovative technologies, AddOn has continually set industry standards of quality and reliability throughout its history.

Reliability is the cornerstone of any optical fiber network and is ingrained in AddOn's DNA. It has played a key role in nurturing the long-term relationships developed over the years with customers. AddOn remains committed to exceeding industry standards with certifications ranging from NEBS Level 3 to ISO 9001:2015 with every new development while maintaining the signature reliability of its products.



U.S. Headquarters

Email: sales@addonnetworks.com

Telephone: +1 877.292.1701

Fax: 949.266.9273

Europe Headquarters

Email: salesemea@addonnetworks.com

Telephone: +44 1285 842070