SFP-16GB-DW42-40-AO

MSA Compliant 16GBase-DWDM FC SFP+ Transceiver C-Band 100GHz (SMF, 1543.73nm, 40km, LC, DOM)

Features:

- SFF-8432 and SFF-8472 Compliance
- Cooled EML transmitter and PIN receiver
- Duplex LC Connector
- Commercial Temperature 0 to 70 Celsius
- Hot Pluggable
- Single-mode Fiber
- Excellent ESD Protection
- Metal with Lower EMI
- RoHS Compliant and Lead Free

Applications:

- 8x/10x Fibre Channel
- 16x Gigabit Ethernet over DWDM
- Access, Metro and Enterprise

Product Description

This MSA compliant SFP+ transceiver provides 16GBase-DWDM Fibre Channel throughput up to 40km over single-mode fiber (SMF) using a wavelength of 1543.73nm via an LC connector. It can operate at temperatures between 0 and 70C. All of our transceivers are built to comply with Multi-Source Agreement (MSA) standards and are uniquely serialized and tested for data-traffic and application to ensure seamless network integration. Additional product features include Digital Optical Monitoring (DOM) support which allows access to real-time operating parameters. We stand behind the quality of our products and proudly offer a limited lifetime warranty.

AddOn's transceivers are RoHS compliant and lead-free.

Regulatory Compliance

- ESD to the Electrical PINs: compatible with MIL-STD-883E Method 3015.4.
- ESD to the LC Receptacle: compatible with IEC 61000-4-3.
- EMI/EMC: compatible with FCC Part 15 Subpart B Rules, EN55022:2010.
- Laser Eye Safety: compatible with FDA 21CFR, EN60950-1& EN (IEC) 60825-1, 2.
- RoHS: compliant with EU RoHS 2.0 directive 2015/863/EU.

Wavelength Guide (100GHz ITU-T Channel)

Channel #	Frequency (THz)	Center Wavelength (nm)
17	191.7	1563.86
18	191.8	1563.05
19	191.9	1562.23
20	192.0	1561.42
21	192.1	1560.61
22	192.2	1559.79
23	192.3	1558.98
24	192.4	1558.17
25	192.5	1557.36
26	192.6	1556.55
27	192.7	1555.75
28	192.8	1554.94
29	192.9	1554.13
30	193.0	1553.33
31	193.1	1552.52
32	193.2	1551.72
33	193.3	1550.92
34	193.4	1550.12
35	193.5	1549.32
36	193.6	1548.51
37	193.7	1547.72
38	193.8	1546.92
39	193.9	1546.12
40	194.0	1545.32
41	194.1	1544.53
42	194.2	1543.73
43	194.3	1542.94
44	194.4	1542.14

45	194.5	1541.35
46	194.6	1540.56
47	194.7	1539.77
48	194.8	1538.98
49	194.9	1538.19
50	195.0	1537.40
51	195.1	1536.61
52	195.2	1535.82
53	195.3	1535.04
54	195.4	1534.25
55	195.5	1533.47
56	195.6	1532.68
57	195.7	1531.90
58	195.8	1531.12
59	195.9	1530.33
60	196.0	1529.55
61	196.1	1528.77

Absolute Maximum Ratings

Parameter	Symbol	Min.	Typ.	Max.	Unit	Notes
Maximum Supply Voltage	Vcc	-0.5		4.5	V	
Storage Temperature	Tstg	-40		85	°C	
Operating Case Temperature	Tc	0		70	°C	
Operating Humidity	RH	5		95	%	
Data Rate	BR	4.25	14.025		Gbps	

Electrical Characteristics

Parameter		Symbol	Min.	Typ.	Max.	Unit	Notes
Power Supply Voltage		Vcc	3.135	3.30	3.465	V	
Power Supply Current		Icc			550	mA	
Transmitter							
Differential Data Input Swing		VIN	180		850	mV	1
Input Differential Impedance		ZIN	90	100	110	Ω	
Tx_Disable	**Disable**	VIH	2.0		Vcc	V	
	Enable	VIL	0		0.8	V	
Tx_Fault	**Fault**	VOH	2.0		Vcc	V	
	Normal	VOL	0		0.8	V	
Receiver							
Differential Data Output Swing		VOUT	300		900	mV	2
LOS		High	2.0		Vcc	V	
		Low			0.8	V	

Notes:

1. PECL input. Internally AC-coupled and terminated.
2. Internally AC-coupled.

Optical Characteristics

Parameter	Symbol	Min.	Typ.	Max.	Unit	Notes
Transmitter						
Center Wavelength	λC	1528.77		1563.86	nm	
Spectral Width (-20dB)	Δλ			1	nm	
Side-Mode Suppression Ratio	SMSR	30			dB	
Average Output Power	POUT	-1		3	dBm	1
Extinction Ratio	ER	8.2			dB	
Receiver						
Center Wavelength	λC	1260		1620	nm	
Receiver Sensitivity	S			-14	dBm	2
Receiver Overload	POL	0.5			dBm	2
LOS De-Assert	LOSD			-15	dBm	
LOS Assert	LOSA	-28			dBm	
LOS Hysteresis	LOSH	0.5			dB	

Notes:

1. The optical power is launched into the SMF.
2. Measured with a PRBS 2^{31}-1 test pattern @14025Mbps, BER ≤1×10^{-12}.

Timing and Electrical Specifications

Parameter	Symbol	Min.	Typ.	Max.	Unit
Tx _Negate Time	T_on			2	ms
Tx_Disable Assert Time	T_off			100	µs
Time To Initialize Including Reset of Tx_Fault	T_init			300	ms
Tx_Fault Assert Time	T_fault			100	µs
Tx_Disable To Reset	T_reset	10			µs
LOS Assert Time	T_loss_on			100	µs
LOS De-Assert Time	T_loss_off			100	µs
Serial ID Clock Rate	T_serial_clock		100	400	KHz
MOD_DEF (0:2) - High	VOH	2		Vcc	V
MOD_DEF (0:2) - Low	VOL			0.8	V

Pin Descriptions

Pin	Symbol	Name/Descriptions	Ref.
1	VeeT	Transmitter Ground (Common with Receiver Ground).	1
2	Tx_Fault	Transmitter Fault. LVTTL-O.	2
3	Tx_Disable	Transmitter Disable. Laser output disabled on “high” or “open.” LVTT-I.	3
4	SDA	2-Wire Serial Interface Data (Same as MOD-DEF2 in INF-8074i). LVTTL-I/O.	
5	SCL	2-Wire Serial Interface Clock (Same as MOD-DEF2 in INF-8074i). LVTTL-I.	
6	MOD_ABS	Module Absent. Connect to VeeT or VeeR in the module.	4
7	RS0	Rate Select 0. Not Used.	5
8	LOS	Loss of Signal Indication. “Logic 0” indicates normal operation. LVTTL-O.	2
9	RS1	Rate Select 1. Not Used.	5
10	VeeR	Receiver Ground (Common with Transmitter Ground).	1
11	VeeR	Receiver Ground (Common with Transmitter Ground).	1
12	RD-	Receiver Inverted Data Out. AC Coupled. CML-O.	
13	RD+	Receiver Non-Inverted Data Out. AC Coupled. CML-O.	
14	VeeR	Receiver Ground (Common with Transmitter Ground).	1
15	VccR	Receiver Power Supply.	
16	VccT	Transmitter Power Supply.	

17	VeeT	Transmitter Ground (Common with Receiver Ground).	1
18	TD+	Transmitter Non-Inverted Data In. AC Coupled. CML-I.	
19	TD-	Transmitter Inverted Data In. AC Coupled. CML-O.	
20	VeeT	Transmitter Ground (Common with Receiver Ground).	1

Notes:

1. The module signal ground contacts, VeeR and VeeT, should be isolated from the module case.
2. This contact is an open collector/drain output and should be pulled up to the Host_Vcc with resistor in the range 4.7kΩ to 10kΩ. Pull-ups can be connected to one or several power supplies; however, the host board design shall ensure that no module contract has voltage exceeding module VccT/R+0.5V.
3. Tx_Disable is an input contact with a 4.7kΩ to 10kΩ pull-up resistor to VccT inside the module.
4. MOD_ABS is connected to VeeT or VeeR in the SFP+ module. The host may pull the contract up to Host_Vcc with a resistor in the range from 4.7kΩ to 10kΩ. MOD_ABS is asserted “High” when the SFP+ module is physically absent from a host slot.
5. Internally pulled down per SFF-8431.

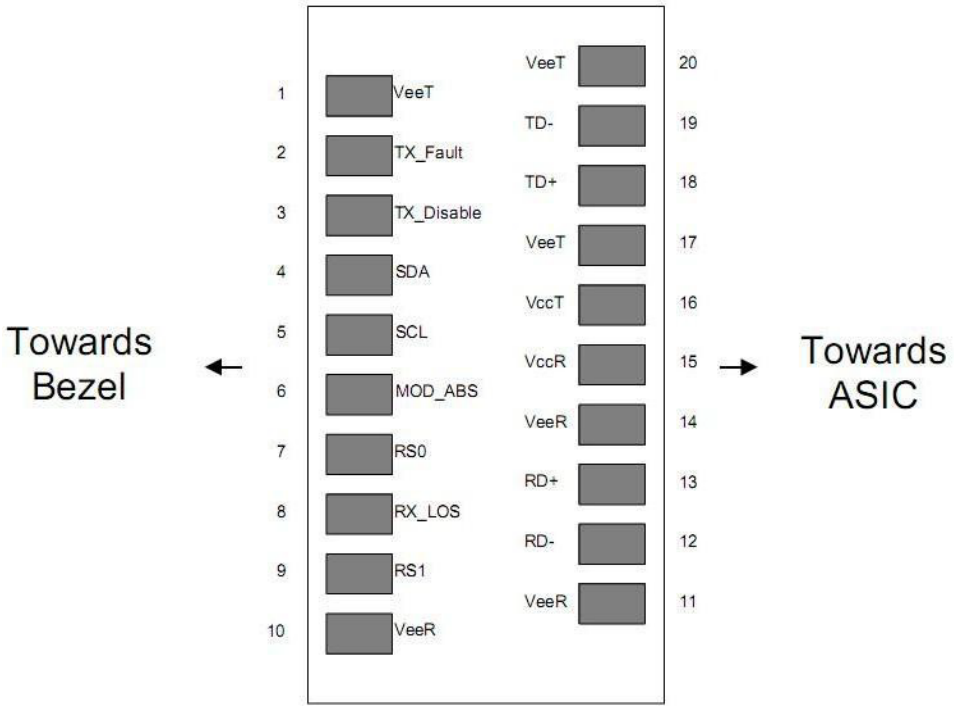

Pin-Out of Connector Block on the Host Board

Transceiver Functional Diagram

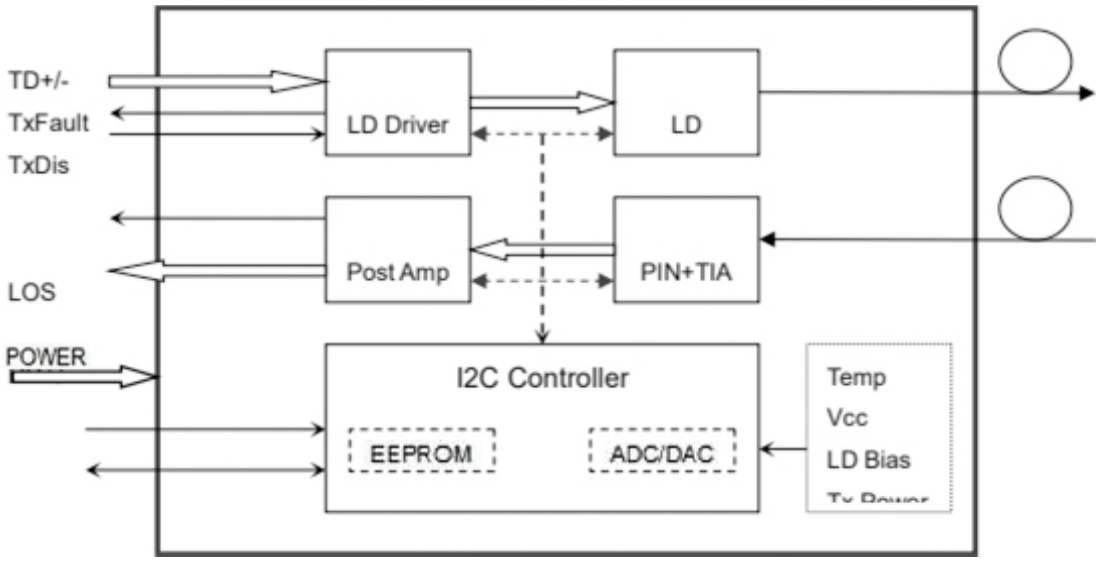

Recommended Interface Circuit Schematic

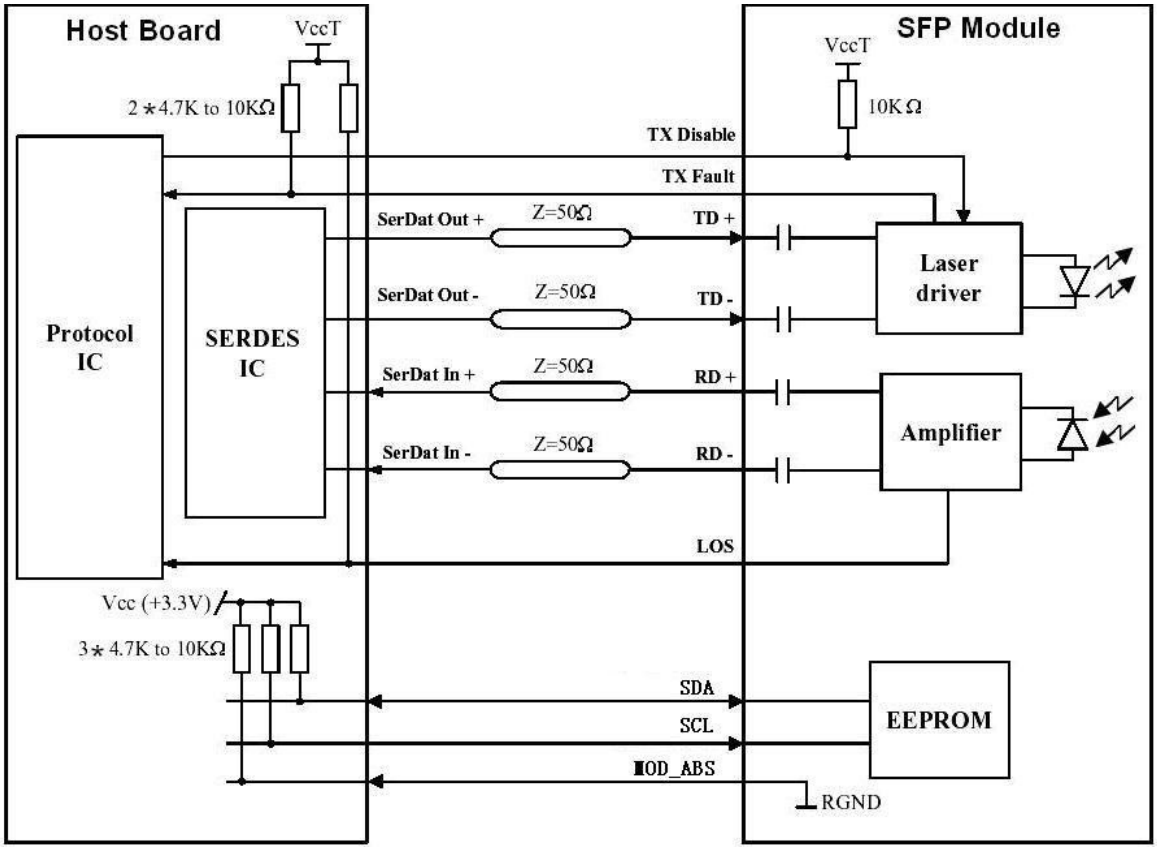

Mechanical Specifications

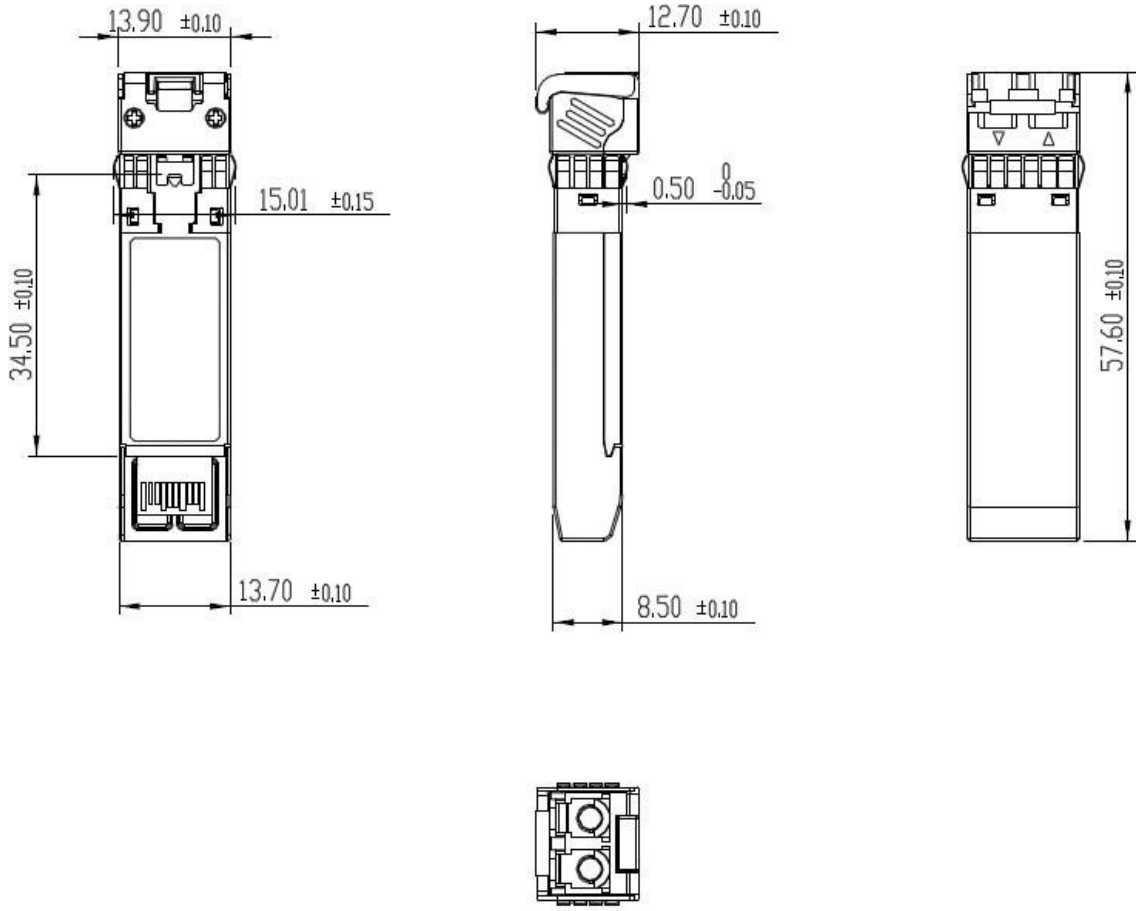

EEPROM Information

EEPROM memory map-specific data field description is as below:

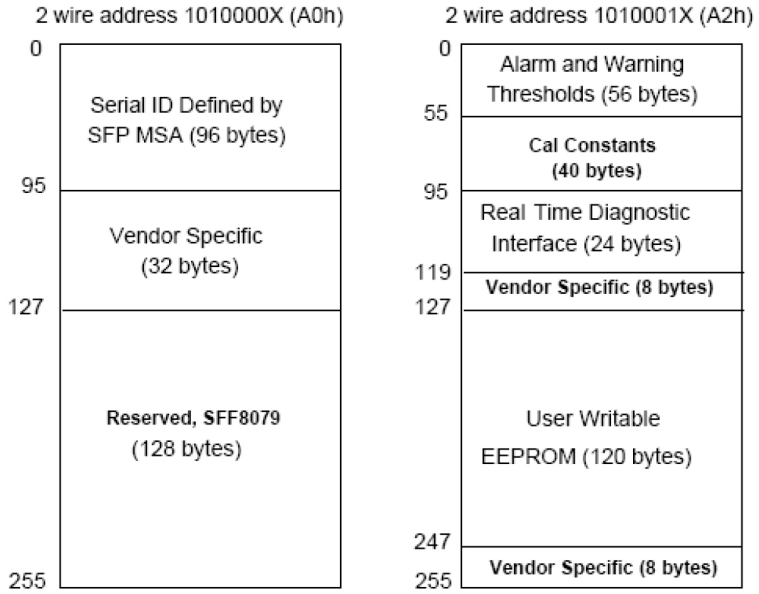

About AddOn Networks

In 1999, AddOn Networks entered the market with a single product. Our founders fulfilled a severe shortage for compatible, cost-effective optical transceivers that compete at the same performance levels as leading OEM manufacturers. Adhering to the idea of redefining service and product quality not previously had in the fiber optic networking industry, AddOn invested resources in solution design, production, fulfillment, and global support.

Combining one of the most extensive and stringent testing processes in the industry, an exceptional free tech support center, and a consistent roll-out of innovative technologies, AddOn has continually set industry standards of quality and reliability throughout its history.

Reliability is the cornerstone of any optical fiber network and is ingrained in AddOn's DNA. It has played a key role in nurturing the long-term relationships developed over the years with customers. AddOn remains committed to exceeding industry standards with certifications ranging from NEBS Level 3 to ISO 9001:2015 with every new development while maintaining the signature reliability of its products.

U.S. Headquarters

Email: sales@addonnetworks.com

Telephone: +1 877.292.1701

Fax: 949.266.9273

Europe Headquarters

Email: salesemea@addonnetworks.com

Telephone: +44 1285 842070