ADD-QCIQMX-A7M

Cisco® QSFP-H40G-ACU7M to NVIDIA® MC2206125-007-ACT Compatible TAA Compliant 40GBase-CU QSFP+ to QSFP+ Direct Attach Cable (Active Twinax, 7m)

Features:

- Support for multi-gigabit data rates up to 10Gbps
- Hot-Pluggable SFP 20PIN footprint
- Data rates backward compatible to 1Gbps
- Low Power Consumption 0.2W
- Power Supply 3.3V
- Improved Pluggable from Factor (IPF) compliant for enhanced EMI/EMC performance
- Operating Temperature: 0 to 70 Celsius
- MSA Compatible
- RoHS Compliant and Lead-Free



Applications:

- High density connections between networking equipment
- Data Center: Switches, Storage, Servers and Routers

Product Description

This Cisco® QSFP-H40G-ACU7M to NVIDIA® MC2206125-007-ACT dual OEM compatible 40GBase-CU QSFP+ to QSFP+ active TAA (Trade Acts Agreement) compliant direct attach cable has a maximum reach of 7.0m (23.0ft). It is 100% Cisco® to NVIDIA® compatible and has been programmed, uniquely serialized, and data-traffic and application tested to ensure that it is compliant and functional. This direct attach cable will initialize and perform identically to Cisco® and NVIDIA®'s individual cables and is built to meet or exceed Cisco® and NVIDIA®'s specifications, and comply with MSA (Multi-Source Agreement) standards. We stand behind the quality of our products and proudly offer a limited lifetime warranty.

AddOn's transceivers are RoHS compliant and lead-free.

TAA refers to the Trade Agreements Act (19 U.S.C. & 2501-2581), which is intended to foster fair and open international trade. TAA requires that the U.S. Government may acquire only "U.S.-made or designated country end products."

TAA COMPLIANT

General Specifications

Parameter	Symbol	Min.	Typ.	Max.	Unit	Notes
Storage Temperature	Tstg	-40		85	°C	
Operating Case Temperature	Tc	0		70	°C	
Power Supply Voltage	Vcc	3.14	3.3	3.47	V	
Power Dissipation	P_{DISS}			0.2	W	
Differential Input Impedance	ZIN	90	100	110	Ω	2
Differential Output Impedance	ZOUT	90	100	110	Ω	3
Differential Input Voltage Amplitude	ΔVIN	300		1100	mVp-p	
Differential Output Voltage Amplitude	ΔVOUT	500		800	mVp-p	
Skew	Sw			300	ps	
Bit Error Rate	BR			E^{-12}		
Input Logic Level - High	VIH	2.0		Vcc	V	
Input Logic Level - Low	VIL	0		0.8	V	
Output Logic Level - High	VOH	Vcc-0.5		Vcc	V	
Output Logic Level - Low	VOL	0		0.4	V	

Notes:

1. BER=10^{-12} and PRBS 2^{31}-1 @10.3125Gbps.
2. Differential input voltage amplitude is measured between Tx#+ and Tx#-.
3. Differential output voltage amplitude is measured between Rx#+ and Rx#-.

Systems

Parameter	Media	Operating Parameters
10Gbps Line Speed, Full Duplex Bit Error Rate: Better Than 10E^{-12}	Hot-Pluggable, Industry-Standard Small Form-Factor Pluggable (SFP+) Copper Cable	Supply Voltage: 3.3V Power Consumption (Per End): Max. 0.2W

Optical Characteristics

Parameter	Symbol	Min.	Typ.	Max.	Unit	Notes
Transmitter						
Center Wavelength	λC	840	850	860	nm	
RMS Spectral Width	Δλ			0.65	nm	
Average Launch Power Per Channel	POUT	-7.5		-2.5	dBm	
Difference in Launch Power Between Any Two Lanes (OMA)					dB	
Extinction Ratio	ER	3			dB	
Peak Power Per Lane				4	dBm	
Transmitter and Dispersion Penalty (TDP) Per Lane	TDP			3.5	dB	
Average Launch Power of Off Transmitter Per Lane				-30	dB	
Transmitter Eye Mask Definition: (X1, X2, X3, Y1, Y2, Y3)		(0.23, 0.34, 0.43, 0.27, 0.33, 0.4)				1
Receiver						
Center Wavelength	λC	840	850	860	nm	
Stressed Receiver Sensitivity in OMA Per Lane				-5.4		2
Maximum Average Power at Receiver Input Per Lane				2.4		
Receiver Reflectance				-12		
Peak Power Per Lane				4		
LOS Assert		-30				
LOS De-Assert – OMA				7.5		
LOS Hysteresis		0.5				

Notes:

1. Hit Ratio = $5x10^{-5}$.
2. Measured with conformance test signal at TP3 for BER = $10e^{-12}$.

Pin Descriptions

Pin	Logic	Symbol	Name/Description	Notes
1		VeeT	Transmitter Ground.	
2	LVTTL-O	Tx_Fault	N/A.	1
3	LVTTL-I	Tx_Disable	Transmitter Disable.	
4	LVTTL-I/O	SDA	2-Wire Serial Data.	
5	LVTTL-I	SCL	2-Wire Serial Clock.	
6		MOD_DEF0	Module Present. Connected to the VeeT.	
7	LVTTL-I	RS0	N/A.	1
8	LVTTL-O	LOS	Loss of Signal.	
9	LVTTL-I	RS1	N/A.	1
10		VeeR	Receiver Ground.	
11		VeeR	Receiver Ground.	
12	CML-O	RD-	Receiver Data Inverted.	
13	CML-O	RD+	Receiver Data Non-Inverted.	
14		VeeR	Receiver Ground.	
15		VccR	+3.3V Receiver Supply.	
16		VccT	+3.3V Transmitter Supply.	
17		VeeT	Transmitter Ground.	
18	CML-I	TD+	Transmitter Data Non-Inverted.	
19	CML-I	TD-	Transmitter Data Inverted.	
20		VeeT	Transmitter Ground.	

Notes:

1. Signals not supported in SFP+ Copper pulled-down to the VeeT with a 30kΩ resistor.

Mechanical Specifications

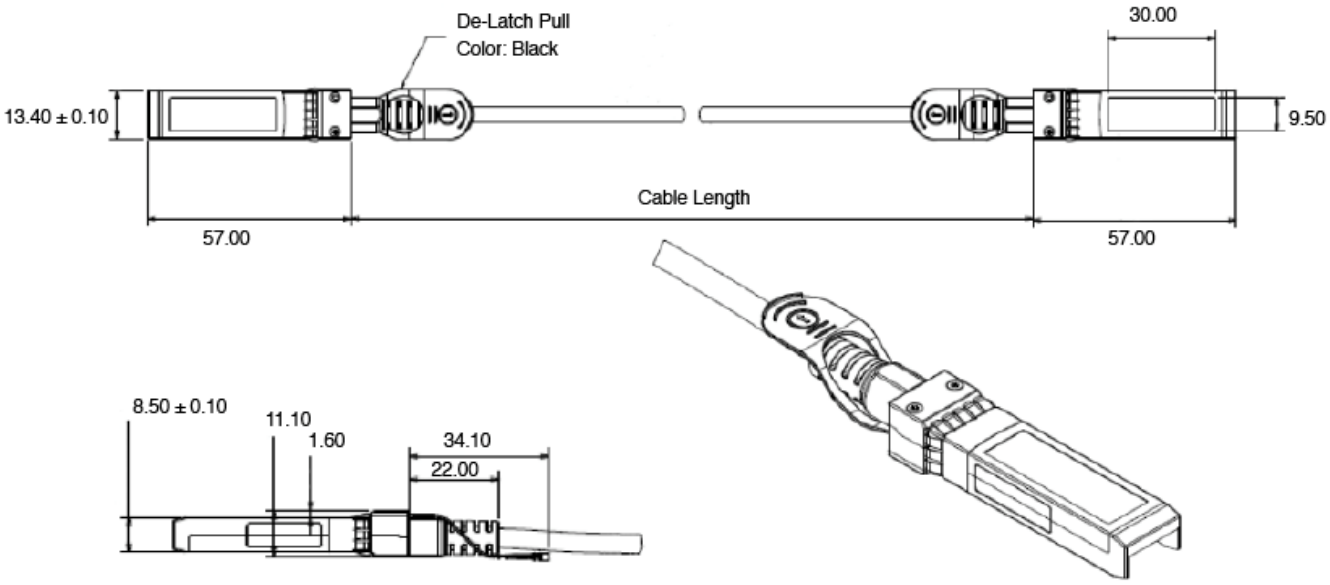

About AddOn Networks

In 1999, AddOn Networks entered the market with a single product. Our founders fulfilled a severe shortage for compatible, cost-effective optical transceivers that compete at the same performance levels as leading OEM manufacturers. Adhering to the idea of redefining service and product quality not previously had in the fiber optic networking industry, AddOn invested resources in solution design, production, fulfillment, and global support.

Combining one of the most extensive and stringent testing processes in the industry, an exceptional free tech support center, and a consistent roll-out of innovative technologies, AddOn has continually set industry standards of quality and reliability throughout its history.

Reliability is the cornerstone of any optical fiber network and is ingrained in AddOn's DNA. It has played a key role in nurturing the long-term relationships developed over the years with customers. AddOn remains committed to exceeding industry standards with certifications ranging from NEBS Level 3 to ISO 9001:2015 with every new development while maintaining the signature reliability of its products.



U.S. Headquarters

Email: sales@addonnetworks.com

Telephone: +1 877.292.1701

Fax: 949.266.9273

Europe Headquarters

Email: salesemea@addonnetworks.com

Telephone: +44 1285 842070