ADD-QCIQIN-AOC5M

Cisco® QSFP-H40G-AOC5M to Intel® CBL2-1000501-3 Compatible TAA Compliant 40GBase-AOC QSFP+ to QSFP+ Active Optical Cable (850nm, MMF, 5m)

Features:

- Support up to 4x10 Gbps bi-directional operation
- Compliant to the IEEE802.3ba
- SFF-8436 QSFP+ compliant
- Reliable VCSEL and PIN photonic devices
- I2C standard management interface
- Automatic power down while broken cable is detected to improve eye safety
- Low power consumption
- Excellent high speed signal integrity
- RoHS Compliant and Lead-Free
- Operating Case Temperature 0 to 70 Celsius



Applications:

- Proprietary high speed, high density data
- 10G/40GBase Ethernet
- High performance computing, server and data storage

Product Description

This Cisco® QSFP-H40G-AOC5M to Intel® CBL2-1000501-3 dual OEM compatible 40GBase-AOC QSFP+ to QSFP+ active optical cable has a maximum reach of 5.0m (16.4ft). It is 100% Cisco® to Intel® compatible and has been programmed, uniquely serialized, data-traffic and application tested to ensure that it is compliant and functional. This active optical cable will initialize and perform identically to Cisco® and Intel®'s individual cables and is built to meet or exceed Cisco® and Intel®'s specifications. This product complies with MSA (Multi-Source Agreement) standards and is TAA (Trade Acts Agreement) compliant. We stand behind the quality of our products and proudly offer a limited lifetime warranty.

AddOn's transceivers are RoHS compliant and lead-free.

TAA refers to the Trade Agreements Act (19 U.S.C. & 2501-2581), which is intended to foster fair and open international trade. TAA requires that the U.S. Government may acquire only "U.S.-made or designated country end products."

TAA COMPLIANT

Absolute Maximum Ratings

Parameter	Symbol	Min.	Typ.	Max.	Unit
Supply Voltage	Vcc	-0.5		3.6	V
Storage Temperature	Tstg	-40		85	℃
Operating Case Temperature	Tc	0	25	70	℃
Relative Humidity	RH	5		85	%
Data Rate Per Channel			4*10.3		Gbps

Electrical Specifications

Parameter	Symbol	Min.	Typ.	Max.	Unit	Notes
Supply Voltage	Vcc	3.135	3.3	3.465	V	
Supply Current	Icc			400	mA	
Power Dissipation	P_{DISS}			1500	mW	
Clock Rate - I2C				400	KHz	1
Module Turn-on time				2000	ms	2

Notes:

1. For the management interface.
2. Time from module power-on/insertion/ResetL de-assert to module fully functional.

Optical Characteristics

Parameter	Symbol	Min.	Typ.	Max.	Unit	Notes
Transmitter						
Reference Differential Input	Zd		100		Ω	1
Optical Return Loss Tolerance				12	dB	
Differential Data Input Swing	VIN,pp	180		1200	mV	
Differential Data Input Threshold			50		mV	2
Receiver						
Reference Differential Input Impedance	Zd		100		Ω	1
Differential Data Output Swing	VOUT,pp	0		800	mV	
Pre-Emphasis Pulse Amplitude Percentage		0			%	4
		10			%	
		20			%	
		40			%	
Pre-Emphasis Pulse Duration			30		ps	
Signal Speed			4*10.3		Gbps	
Differential Data Output Swing		150		850	mV	
Differential Data Output Swing When Squelched				50	mV	
Rise/Fall Time (20-80%)		24			ps	

Notes:

1. AC coupled inside the AOC module.
2. Input swing to trigger Tx-squelch.
3. User selectable. Percentage is the ratio of pre-emphasis amplitude to output swing. Users could change by writing to page 3 address 237, default value is “10.”

Pin Descriptions

Pin	Logic	Symbol	Name/Description	Note
1		GND	Module Ground.	1
2	CML-I	Tx2-	Transmitter Inverted Data Input.	
3	CML-I	Tx2+	Transmitter Non-Inverted Data Input.	
4		GND	Module Ground.	1
5	CML-I	Tx4-	Transmitter Inverted Data Input.	
6	CML-I	Tx4+	Transmitter Non-Inverted Data Input.	
7		GND	Module Ground.	1
8	LVTTL-I	ModSelL	Module Select.	2
9	LVTTL-I	ResetL	Module Reset.	2
10		VccRx	+3.3V Receiver Power Supply.	
11	LVCMOS-I/O	SCL	2-Wire Serial Interface Clock.	2
12	LVCMOS-I/O	SDA	2-Wire Serial Interface Data.	2
13		GND	Module Ground.	1
14	CML-O	Rx3+	Receiver Non-Inverted Data Output.	
15	CML-O	Rx3-	Receiver Inverted Data Output.	
16		GND	Module Ground.	1
17	CML-O	Rx1+	Receiver Non-Inverted Data Output.	
18	CML-O	Rx1-	Receiver Inverted Data Output.	
19		GND	Module Ground.	1
20		GND	Module Ground.	1
21	CML-O	Rx2-	Receiver Inverted Data Output.	
22	CML-O	Rx2+	Receiver Non-Inverted Data Output.	
23		GND	Module Ground.	1
24	CML-O	Rx4-	Receiver Inverted Data Output.	
25	CML-O	Rx4+	Receiver Non-Inverted Data Output.	
26		GND	Module Ground.	1
27	LVTTL-O	ModPrsL	Module Present. Internally pulled down to the GND.	
28	LVTTL-O	IntL	Interrupt output should be pulled up on the host board.	2
29		VccTx	+3.3V Transmitter Power Supply.	
30		Vcc1	+3.3V Power Supply.	
31	LVTTL-I	LPMode	Low-Power Mode.	2
32		GND	Module Ground.	1
33	CML-I	Tx3+	Transmitter Non-Inverted Data Input.	
34	CML-I	Tx3-	Transmitter Inverted Data Input.	
35		GND	Module Ground.	1

36	CML-I	Tx1+	Transmitter Non-Inverted Data Input.	
37	CML-I	Tx1-	Transmitter Inverted Data Input.	

Notes:

1. GND is the symbol for signal and supply (power). Connect these directly to the host board signal common ground plane.
2. VccRx, Vcc1, and VccTx are the receiving and transmission power suppliers and shall be applied concurrently. VccRx, Vcc1, and VccTx may be internally connected within the QSFP+. The connector pins are each rated for a maximum current of 500mA.

Pin Assignment and Pin Description

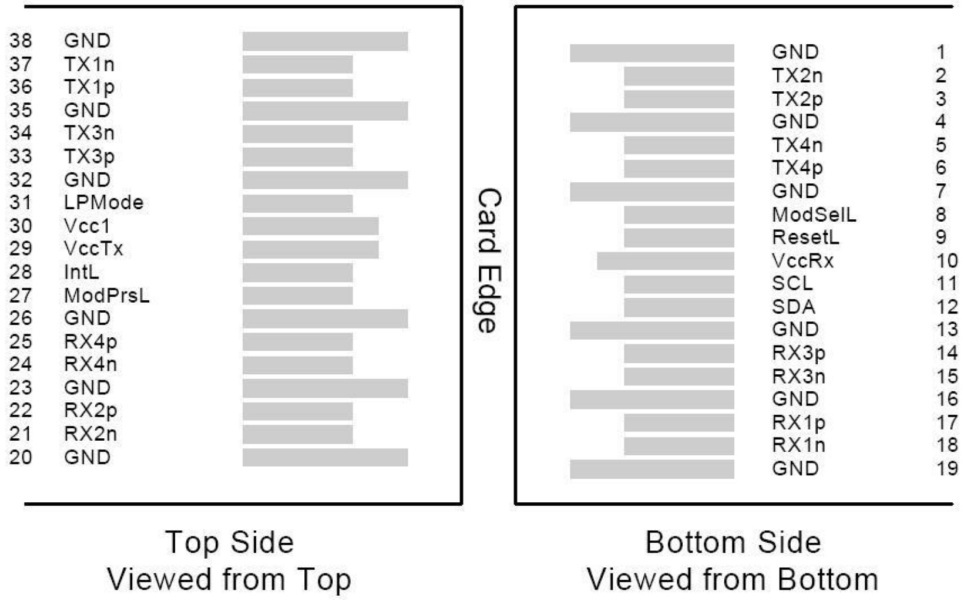

Recommended Application Interface Circuit

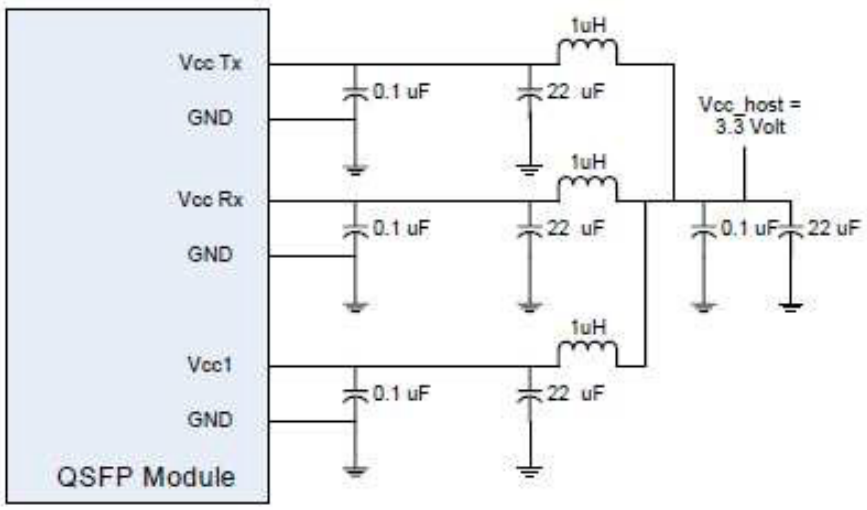

Mechanical Specifications

Parameter	Symbol	Min.	Typ.	Max.	Unit	Notes
AOC Cable Length (L<5m)	L	L-0.06	L	L+0.06	M	
Module Retention		90		170	N	
Module Insertion		0		18	N	
Module Extraction		0		25	N	
Cable Pull Strength – Apply Load at 0°		44			N	
Cable Pull Strength – Apply Load at 90°		33			N	
Clearance Out of IO Bezel		75			nm	
Cable Bending Radius		3			cm	
Insertion/Removal Cycles		50			Cycles	

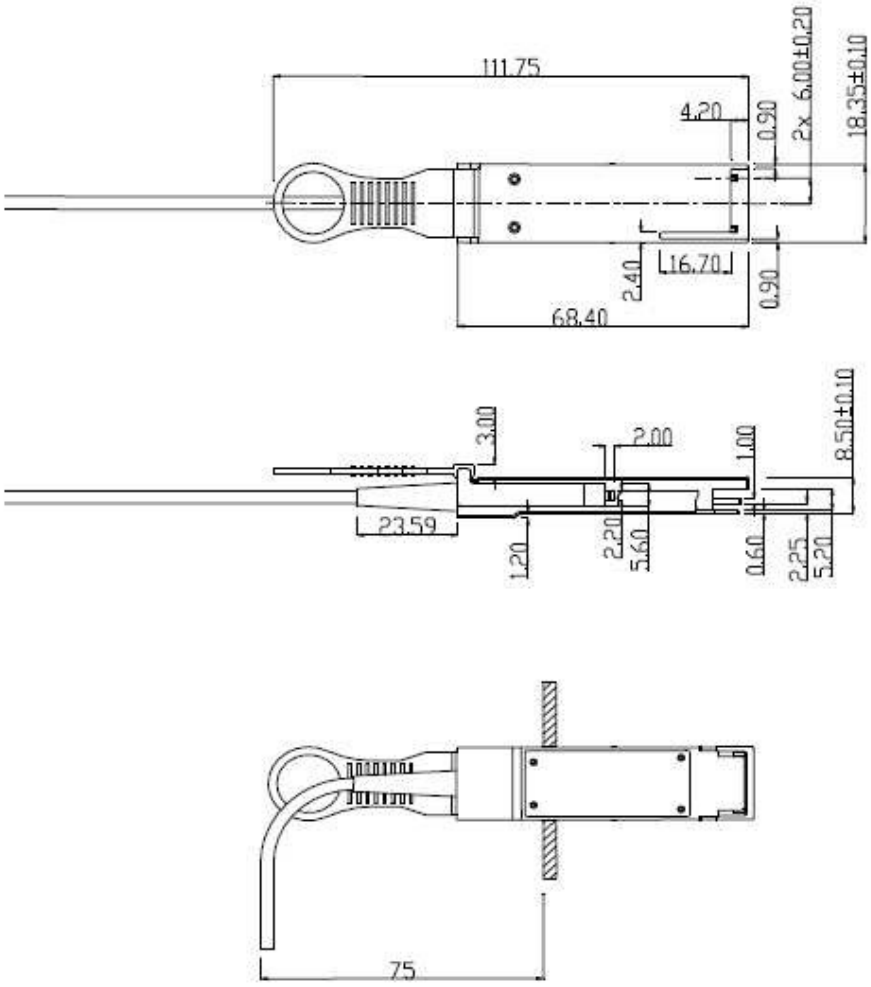

Clearance 75mm Is Required.

Cable Type: Low Smoke Zero Halogen

About AddOn Networks

In 1999, AddOn Networks entered the market with a single product. Our founders fulfilled a severe shortage for compatible, cost-effective optical transceivers that compete at the same performance levels as leading OEM manufacturers. Adhering to the idea of redefining service and product quality not previously had in the fiber optic networking industry, AddOn invested resources in solution design, production, fulfillment, and global support.

Combining one of the most extensive and stringent testing processes in the industry, an exceptional free tech support center, and a consistent roll-out of innovative technologies, AddOn has continually set industry standards of quality and reliability throughout its history.

Reliability is the cornerstone of any optical fiber network and is ingrained in AddOn's DNA. It has played a key role in nurturing the long-term relationships developed over the years with customers. AddOn remains committed to exceeding industry standards with certifications ranging from NEBS Level 3 to ISO 9001:2015 with every new development while maintaining the signature reliability of its products.



U.S. Headquarters

Email: sales@addonnetworks.com

Telephone: +1 877.292.1701

Fax: 949.266.9273

Europe Headquarters

Email: salesemea@addonnetworks.com

Telephone: +44 1285 842070