SFP-10GBASE-ER31-AO

MSA Compliant 10GBase-ER SFP+ Transceiver (SMF, 1310nm, 40km, LC)

Features:

- SFF-8432 and SFF-8472 Compliance
- Duplex LC Connector
- Commercial Temperature 0 to 70 Celsius
- Single-mode Fiber
- Hot Pluggable
- Excellent ESD Protection
- Metal with Lower EMI
- RoHS Compliant and Lead Free

Applications:

- 8x/10x Fibre Channel
- 10GBase-ER Ethernet
- Access, Datacenter and Enterprise
- Mobile Fronthaul CPRI/OBSAI

Product Description

This MSA compliant SFP+ transceiver provides 10GBase-ER throughput up to 40km over single-mode fiber (SMF) using a wavelength of 1310nm via an LC connector. It can operate at temperatures between 0 and 70C. All of our transceivers comply with Multi-Source Agreement (MSA) standards to provide seamless network integration. Additional product features include Digital Optical Monitoring (DOM) support which allows access to real-time operating parameters. We stand behind the quality of our products and proudly offer a limited lifetime warranty.

AddOn's transceivers are RoHS compliant and lead-free.

Regulatory Compliance

- ESD to the Electrical PINs: compatible with MIL-STD-883E Method 3015.4
- ESD to the LC Receptacle: compatible with IEC 61000-4-3
- EMI/EMC compatible with FCC Part 15 Subpart B Rules, EN55022:2010
- Laser Eye Safety compatible with FDA 21CFR, EN60950-1& EN (IEC) 60825-1,2
- RoHS compliant with EU RoHS 2.0 directive 2015/863/EU

Absolute Maximum Ratings

Parameter	Symbol	Min.	Typ.	Max.	Unit
Maximum Supply Voltage	Vcc	-0.5		4.0	V
Storage Temperature	TS	-40		85	°C
Operating Case Temperature	Ti	0	25	70	°C
Data Rate			10.3125		Gbps

Electrical Characteristics (TOP=25°C, Vcc=3.3Volts)

Parameter		Symbol	Min.	Typ.	Max.	Unit	Notes
Power Supply Voltage		Vcc	3.135	3.3	3.465	V	
Power Supply Current		Icc			300	mA	
Power Dissipation		PD			1000	mW	
Transmitter							
Input Differential Impedance		Zin		100		Ω	
Differential Data Input Swing		Vin,p-p	180		700	mVp-p	
TX_FAULT	**Transmitter Fault**	VOH	2.0		VCCHOST	V	
	Normal Operation	VOL	0		0.8	V	
TX_DISABLE	**Transmitter Disable**	VIH	2.0		VCCHOST	V	
	Transmitter Enable	VIL	0		0.8	V	
Receiver							
Output Differential Impedance		Zo		100		Ω	
Differential Data Output Swing		VOUT, P-P	300		850	mVp-p	1
Data Output Rise Time, Fall Time		t_r, t_f	28			ps	2
RX_LOS	**Loss of signal (LOS)**	VOH	2.0		VCCHOST	V	3
	Normal Operation	VOL	0		0.8	V	3

Notes:

1. Internally AC coupled, but requires an external 100Ω differential load termination.
2. 20-80%.
3. LOS is an open collector output. Should be pulled up with 4.7kΩ on the host board.

Optical Characteristics

Parameter	Symbol	Min.	Typ.	Max.	Unit	Notes
Transmitter						
Launch Optical Power	Po	0		+5	dBm	1
Center Wavelength Range	λc	1260	1310	1355	nm	
Extinction Ratio	ER	3.5			dB	2
Optical Modulation Amplitude	OMA	-5.2			dBm	
Spectral Width (-20dB)	Δλ			1	nm	
Side Mode Suppression Ratio	SMSR	30			dB	
Transmitter and Dispersion Penalty	TDP			3.2	dB	
Optical Return Loss Tolerance	ORLT			12	dB	
Pout @TX_Disable Asserted	Poff			-30	dBm	1
Eye Diagram	IEEE Std 802.3-2005 10Gb Ethernet 10GBASE-ER compatible					
Receiver						
Center Wavelength	λc	1260	1310	1355	nm	
Receiver Sensitivity (Pavg)	S			-15	dBm	3
Receiver Overload (Pavg)	POL	0.5			dBm	3
Stressed Sensitivity (OMA)				-10.3	dBm	4
Optical Return Loss	ORL	12			dB	
LOS De-Assert	LOS_D			-16	dBm	
LOS Assert	LOS_A	-30			dBm	
LOS Hysteresis		0.5		4.5	dB	

Notes:

1. The optical power is launched into 9/125µm SMF.
2. Measured with a PRBS 2^{31}-1 test pattern @10.3125Gbps
3. Measured with PRBS 2^{31}-1 test pattern, 10.3125 Gb/s, BER<10^{-12}.
4. Comply with IEEE 802.3-2005.

Pin Descriptions

Pin	Symbol	Name/Descriptions	Ref.
1	VeeT	Transmitter Ground	1
2	TX_Fault	Transmitter Fault (LVTTL-O) - High indicates a fault condition	2
3	TX_Disable	Transmitter Disable (LVTTL-I) – High or open disables the transmitter	3
4	SDA	Two wire serial interface Data Line (LVCMOS-I/O) (MOD-DEF2)	4
5	SCL	Two wire serial interface Clock Line (LVCMOS-I/O) (MOD-DEF1)	4
6	MOD_ABS	Module Absent (Output), connected to VeeT or VeeR in the module	5
7	RS0	Rate Select 0 – Not used, Presents high input impedance	
8	RX_LOS	Receiver Loss of Signal (LVTTL-O)	2
9	RS1	Rate Select 1 – Not used, Presents high input impedance	
10	VeeR	Receiver Ground	1
11	VeeR	Receiver Ground	1
12	RD-	Inverse Received Data out (CML-O)	
13	RD+	Received Data out (CML-O)	
14	VeeR	Receiver Ground	
15	VccR	Receiver Power - +3.3V	
16	VccT	Transmitter Power - +3.3 V	
17	VeeT	Transmitter Ground	1
18	TD+	Transmitter Data In (CML-I)	
19	TD-	Inverse Transmitter Data In (CML-I)	
20	VeeT	Transmitter Ground	1

Notes:

1. The module signal grounds are isolated from the module case.
2. This is an open collector/drain output that on the host board requires a 4.7KΩ to 10KΩ pull-up resistor to VccHost.
3. This input is internally biased high with a 4.7KΩ to 10KΩ pull-up resistor to VccT.
4. Two-Wire Serial interface clock and data lines require an external pull-up resistor dependent on the capacitance load.
5. This is a ground return that on the host board requires a 4.7KΩ to 10KΩ pull-up resistor to VccHost.

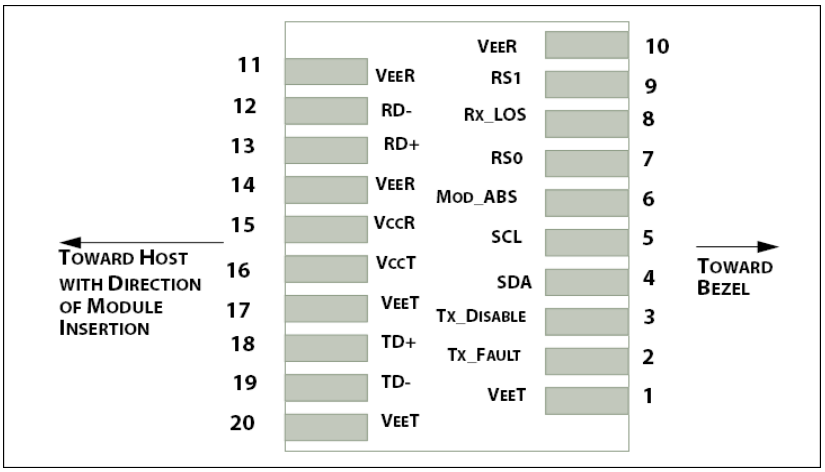

Recommended Host Board Power Supply Filter Network

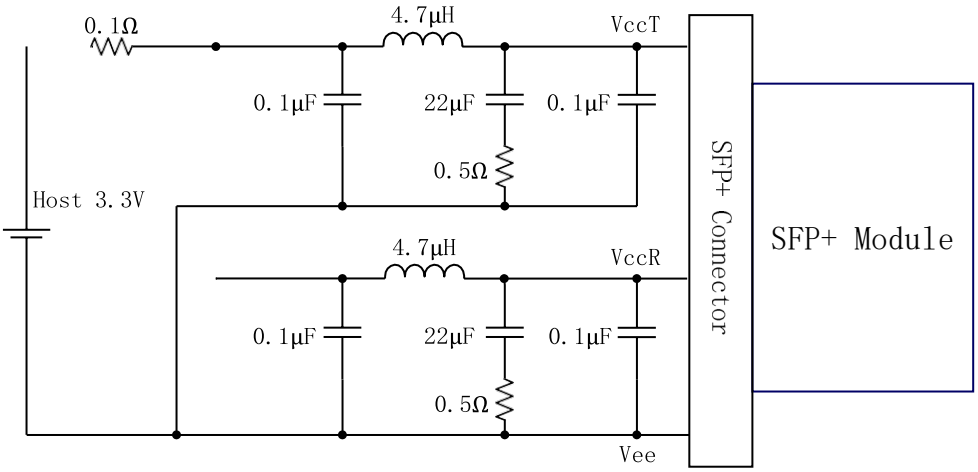

Figure 2. Recommended Host Board Power Supply Filter Network

Recommended Application Interface Block Diagram

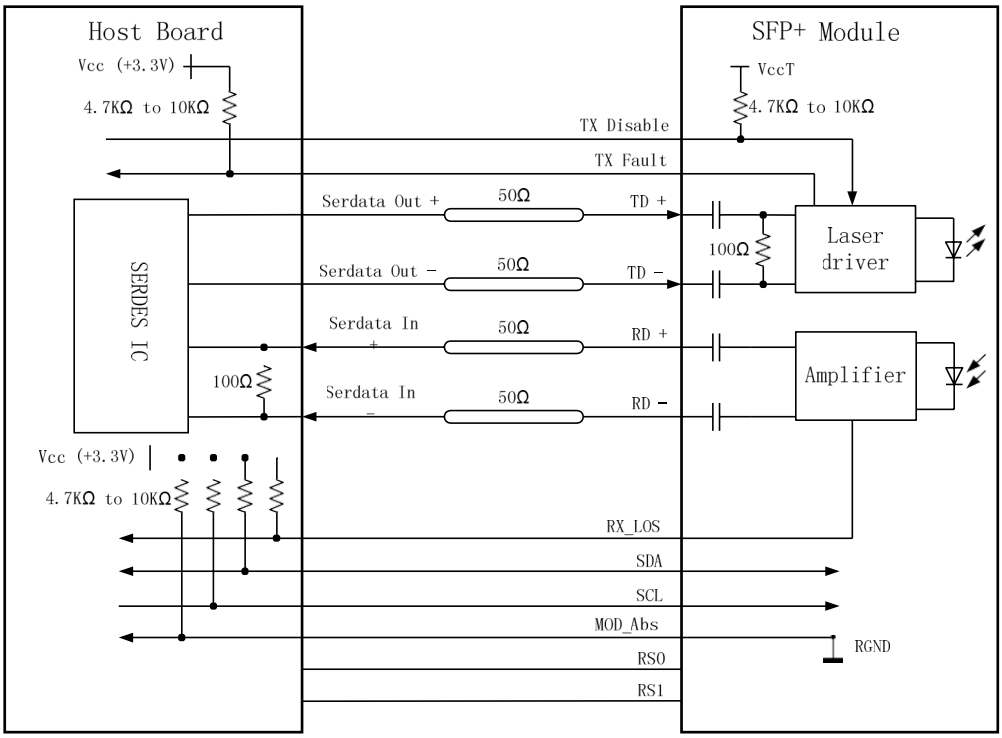

Mechanical Specifications

Small Form Factor Pluggable (SFP) transceivers are compatible with the dimensions defined by the SFP Multi-Sourcing Agreement (MSA).

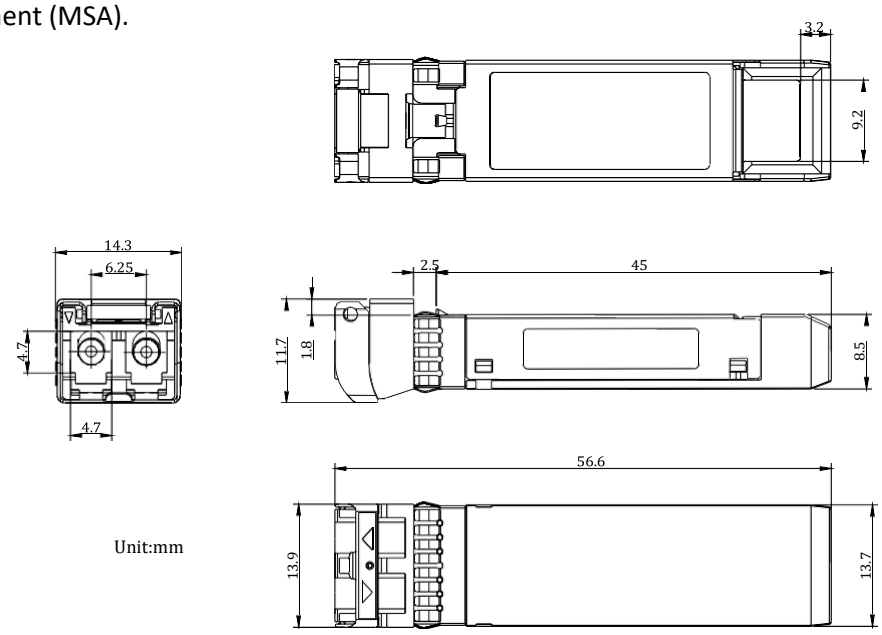

About AddOn Networks

In 1999, AddOn Networks entered the market with a single product. Our founders fulfilled a severe shortage for compatible, cost-effective optical transceivers that compete at the same performance levels as leading OEM manufacturers. Adhering to the idea of redefining service and product quality not previously had in the fiber optic networking industry, AddOn invested resources in solution design, production, fulfillment, and global support.

Combining one of the most extensive and stringent testing processes in the industry, an exceptional free tech support center, and a consistent roll-out of innovative technologies, AddOn has continually set industry standards of quality and reliability throughout its history.

Reliability is the cornerstone of any optical fiber network and is ingrained in AddOn's DNA. It has played a key role in nurturing the long-term relationships developed over the years with customers. AddOn remains committed to exceeding industry standards with certifications ranging from NEBS Level 3 to ISO 9001:2015 with every new development while maintaining the signature reliability of its products.

U.S. Headquarters

Email: sales@addonnetworks.com

Telephone: +1 877.292.1701

Fax: 949.266.9273

Europe Headquarters

Email: salesemea@addonnetworks.com

Telephone: +44 1285 842070