**SFP-10GB-DW-C-A5-15-AO**

MSA Compliant 10GBase-DWDM SFP+ Transceiver C-Band 50GHz (SMF, Auto-Tunable, 15km, LC, DOM, -40 to 85C)

**Features:**

- SFF-8432 and SFF-8472 Compliance
- Duplex LC Connector
- Industrial Temperature -40 to 85 Celsius
- Single-mode Fiber
- Hot Pluggable
- Excellent ESD Protection
- Metal with Lower EMI
- RoHS Compliant and Lead Free

**Applications:**

- 10G Ethernet

**Product Description**

This MSA compliant SFP+ transceiver provides 10GBase-DWDM throughput up to 15km over single-mode fiber (SMF) using a auto-tunable wavelength via an LC connector. It is capable of withstanding -40 to 85C environments and can operate at temperatures between -40 and 85C. All of our transceivers are built to comply with Multi-Source Agreement (MSA) standards and are uniquely serialized and tested for data-traffic and application to ensure seamless network integration. Additional product features include Digital Optical Monitoring (DOM) support which allows access to real-time operating parameters. We stand behind the quality of our products and proudly offer a limited lifetime warranty.

AddOn's transceivers are RoHS compliant and lead-free.

**Regulatory Compliance**

- ESD to the Electrical PINs: compatible with MIL-STD-883E Method 3015.4
- ESD to the LC Receptacle: compatible with IEC 61000-4-3
- EMI/EMC compatible with FCC Part 15 Subpart B Rules, EN55022:2010
- Laser Eye Safety compatible with FDA 21CFR, EN60950-1& EN (IEC) 60825-1,2
- RoHS compliant with EU RoHS 2.0 directive 2015/863/EU

**Tunable SFP+ Channel Number and Wavelength**

| Channel No. | Frequency (THz) | Center Wavelength (nm) | Channel No | Frequency (THz) | Center Wavelength (nm) |
|---|---|---|---|---|---|
| **1** | 191.35 | 1566.72 | **49** | 193.75 | 1547.32 |
| **2** | 191.40 | 1566.31 | **50** | 193.80 | 1546.92 |
| **3** | 191.45 | 1565.90 | **51** | 193.85 | 1546.52 |
| **4** | 191.50 | 1565.50 | **52** | 193.90 | 1546.12 |
| **5** | 191.55 | 1565.09 | **53** | 193.95 | 1545.72 |
| **6** | 191.60 | 1564.68 | **54** | 194.00 | 1545.32 |
| **7** | 191.65 | 1564.27 | **55** | 194.05 | 1544.92 |
| **8** | 191.70 | 1563.86 | **56** | 194.10 | 1544.53 |
| **9** | 191.75 | 1563.45 | **57** | 194.15 | 1544.13 |
| **10** | 191.80 | 1563.05 | **58** | 194.20 | 1543.73 |
| **11** | 191.85 | 1562.64 | **59** | 194.25 | 1543.33 |
| **12** | 191.90 | 1562.23 | **60** | 194.30 | 1542.94 |
| **13** | 191.95 | 1561.83 | **61** | 194.35 | 1542.54 |
| **14** | 192.00 | 1561.42 | **62** | 194.40 | 1542.14 |
| **15** | 192.05 | 1561.01 | **63** | 194.45 | 1541.75 |
| **16** | 192.10 | 1560.61 | **64** | 194.50 | 1541.35 |
| **17** | 192.15 | 1560.20 | **65** | 194.55 | 1540.95 |
| **18** | 192.20 | 1559.79 | **66** | 194.60 | 1540.56 |
| **19** | 192.25 | 1559.39 | **67** | 194.65 | 1540.16 |
| **20** | 192.30 | 1558.98 | **68** | 194.70 | 1539.77 |
| **21** | 192.35 | 1558.58 | **69** | 194.75 | 1539.37 |
| **22** | 192.40 | 1558.17 | **70** | 194.80 | 1538.98 |
| **23** | 192.45 | 1557.77 | **71** | 194.85 | 1538.58 |
| **24** | 192.50 | 1557.36 | **72** | 194.90 | 1538.19 |
| **25** | 192.55 | 1556.96 | **73** | 194.95 | 1537.79 |
| **26** | 192.60 | 1556.56 | **74** | 195.00 | 1537.40 |
| **27** | 192.65 | 1556.15 | **75** | 195.05 | 1537.00 |
| **28** | 192.70 | 1555.75 | **76** | 195.10 | 1536.61 |
| **29** | 192.75 | 1555.34 | **77** | 195.15 | 1536.22 |
| **30** | 192.80 | 1554.94 | **78** | 195.20 | 1535.82 |
| **31** | 192.85 | 1554.54 | **79** | 195.25 | 1535.43 |
| **32** | 192.90 | 1554.13 | **80** | 195.30 | 1535.04 |
| **33** | 192.95 | 1553.73 | **81** | 195.35 | 1534.64 |
| **34** | 193.00 | 1553.33 | **82** | 195.40 | 1534.25 |
| **35** | 193.05 | 1552.93 | **83** | 195.45 | 1533.86 |
| **36** | 193.10 | 1552.52 | **84** | 195.50 | 1533.47 |
| **37** | 193.15 | 1552.12 | **85** | 195.55 | 1533.07 |

| | | | | | |
|---|---|---|---|---|---|
| **38** | 193.20 | 1551.72 | **86** | 195.60 | 1532.68 |
| **39** | 193.25 | 1551.32 | **87** | 195.65 | 1532.29 |
| **40** | 193.30 | 1550.92 | **88** | 195.70 | 1531.90 |
| **41** | 193.35 | 1550.52 | **89** | 195.75 | 1531.51 |
| **42** | 193.40 | 1550.12 | **90** | 195.80 | 1531.12 |
| **43** | 193.45 | 1549.72 | **91** | 195.85 | 1530.72 |
| **44** | 193.50 | 1549.32 | **92** | 195.90 | 1530.33 |
| **45** | 193.55 | 1548.91 | **93** | 195.95 | 1529.94 |
| **46** | 193.60 | 1548.52 | **94** | 196.00 | 1529.55 |
| **47** | 193.65 | 1548.11 | **95** | 196.05 | 1529.16 |
| **48** | 193.70 | 1547.72 | **96** | 196.10 | 1528.77 |

## Absolute Maximum Ratings

| Parameter | Symbol | Min. | Max. | Unit | Notes |
|---|---|---|---|---|---|
| **Maximum Supply Voltage** | VccT | 0 | +3.6 | V | +3.3V |
| **Optical Receiver Input** | $P_{IMAX}$ | | +5 | dBm | Average |
| **Operating Case Temperature** | Tc | -40 | 85 | °C | |
| **Storage Temperature** | $T_{STR}$ | -40 | 85 | °C | |
| **ESD SFI pins** | ESD1 | | 1 | kV | HBM |
| **ESD except for SFI pins** | ESD2 | | 2 | kV | HBM |

## Electrical Characteristics

| Parameter | Symbol | Min. | Typ. | Max. | Unit | Notes |
|---|---|---|---|---|---|---|
| **Supply Voltage** | Vcc | 3.135 | 3.300 | 3.465 | V | |
| **Supply Current** | Icc3 | | | 0.73 | A | |
| **Power Consumption** | $P_{DS}$ | | | 2.3 | W | |
| **Low Speed Control Pin Logic Levels** | | | | | | |
| **Host Vcc Range** | Host_Vcc | 3.14 | | 3.47 | V | with ± 5% variation |
| **TX_Fault, RX_LOS** | $V_{OL}$ | 0.0 | | 0.4 | V | Note 1 |
| | $V_{OH}$ | 2.0 | | Vcc+0.3 | V | Note 1 |
| **TX_Disable** | VIL | -0.3 | | 0.8 | V | Pulled up with 10k ohms to VccT in the module |
| | VIH | 2.0 | | VccT +0.3 | V | |

**Notes:**

1. Rpullup (Rp) is the pull up resistor. Active bus termination may be used by the host in place of a pullup resistor. Pull ups can be connected to multiple power supplies, however the host board design shall ensure that no module pin has voltage exceeding module. Measures at the Host side of the connector.

## Optical Characteristics

| Parameter | Symbol | Min. | Typ. | Max. | Unit | Notes |
|---|---|---|---|---|---|---|
| **Transmitter** | | | | | | |
| **Data Rate** | | 1.2 | | 11.3 | Gbit/s | NRZ |
| **Frequency range** | | 191.35 | | 196.10 | THz | 50GHz grid, 96 channels |
| **Frequency accuracy** | | -2.5 | | +2.5 | GHz | EOL |
| **Optical transmit power** | Po | -1.0 | | +3.0 | dBm | EOL |
| **Shuttered output power** | | | | -35 | dBm | |
| **Optical power stability** | ΔPo | -1.0 | | +1.0 | dB | All channels, SOL |
| **Side mode suppression** | SMSR | 35 | | | dB | ±2.5nm, modulated |
| **Spectral width** | Δλ | | 0.3 | 0.5 | nm | -20dB, modulated |
| **Extinction ratio** | ER | 8.2 | | | dB | Filtered, 10.3Gb/s |
| **Eye diagram compliance** | | GR-253, ITU-T G.691 | | | | |
| **Mask margin** | | 10 | | | % | |
| **Tuning speed** | | | | 10 | s | warmed-up, from any CH to any other CH |
| **Receiver** | | | | | | |
| **Data Rate** | | 1.2 | | 11.3 | Gbit/s | NRZ |
| **Input operating wavelength** | | 1525 | | 1575 | nm | |
| **Minimum Receiver Sensitivity (Back to Back)** | Prmin | | | -24 | dBm | 10.3Gb/s, 1E-12, OSNR>35dB |
| **Minimum Receiver Sensitivity (+1100ps/nm)** | | | | -23 | dBm | |
| **Minimum Receiver Sensitivity (-300 to +1400 ps/nm)** | | | | -21 | dBm | |
| **Maximum input power (overload)** | Pro | -7 | | | dBm | |
| **Receiver Reflectance** | RL | | | -27 | dB | |
| **LOS Assert** | | -27.5 | | | dBm | |
| **LOS De-Assert** | $LOS_D$ | | | -24 | dBm | |
| **LOS Hysteresis** | | 0.1 | | | dB | |
| **LOS Assert Time** | | | | 100 | us | |
| **LOS De-Assert Time** | | | | 100 | us | |

**Auto tuning**

The autotuning process is a host independent scheme. When the TSFP+ modules with auto-tuning implemented are inserted into the corresponding electrical ports at a central office and a remote site, both modules will automatically start the automatic tuning process.

The process ensures that the TSFP+ modules tune to the channel defined by the DWDM filter (MUX/DeMUX) which both modules are connected to. The first module to converge on the correct channel initiates a unique process, which helps both sides of the link communicate properly.

After completion of the auto-tune process, both modules fix their wavelengths and move into normal 10Gbit/s operation. A LOS condition, a shutdown condition (Tx Disable) and a power cycle shall trigger a restart of the auto tuning process.

The TSFP+ module shall appear as a regular Tunable product to the host system once Auto-tune is completed.

**Tuning Parameter**

| No. | Parameter | Min | Max | Unit | Description |
|---|---|---|---|---|---|
| 1 | **Channel to channel switch time during tuning** | | 3.256 | s | |
| 2 | **Tuning convergence time** | | 340 | s | Not including cold start |
| 3 | **Timeout (t1)** | 400 | | s | |
| 4 | **LOS timeout (t2)** | 15 | 16 | s | |
| 5 | **Default channel** | 191.35 | | THz | |
| 6 | **Channel Sequence** | 191.35<br>191.40….196.1 | | THz | 50GHz grid |
| 7 | **Modulation rate** | 125 | | Baud/s | Manchester encoding |
| 8 | **Bit rate** | 62.5 | | Bit/s | |

**SFP+ 2 Wire Interface Timing Requirements**

| Parameter | Symbol | Min | Max | Unit | Conditions |
|---|---|---|---|---|---|
| **Clock Frequency** | fSCL | 100 | 400 | kHz | |
| **Clock Pulse Width Low** | tLOW | 1.3 | - | µs | |
| **Clock Pulse Width High** | tHIGH | 0.6 | - | µs | |
| **Time bus free before new transaction can start** | tBUF | 20 | - | µs | Between STOP and START |
| **START Hold time** | tHD,STA | 0.6 | - | µs | |
| **START Set-Up time** | tSU,STA | 0.6 | - | µs | |
| **Data in Hold time** | tHD,DAT | 0 | - | µs | |
| **Data in Set-Up time** | tSU,DAT | 0.1 | - | µs | |
| **Input Rise time (100 kHz)** | tR,100 | - | 1000 | ns | Note 1 |
| **Input Rise time (400 kHz)** | tR,400 | - | 300 | ns | Note 1 |
| **Input Fall time (100 kHz)** | tF,100 | - | 300 | ns | Note 1 |
| **Input Fall time (400 kHz)** | tF,400 | - | 300 | ns | Note 1 |
| **STOP Set-Up time** | tSU,STO | 0.6 | - | µs | |
| **Serial Interface Clock Holdoff "Clock Stretching"** | T_clock_hold | - | 500 | µs | Maximum time the SFP+ may hold the SCL line low before continuing R or W operation |
| **Complete Single or Sequential Write** | tWR | - | 40 | ms | Complete (up to) 8 Byte Write |
| **Endurance (Write Cycles)** | | 10 k | - | Cycles | @ Max Operating Temperature |

**Notes:**

1. From (VIL, MAX -0.15) to (VIH, MIN +0.15)

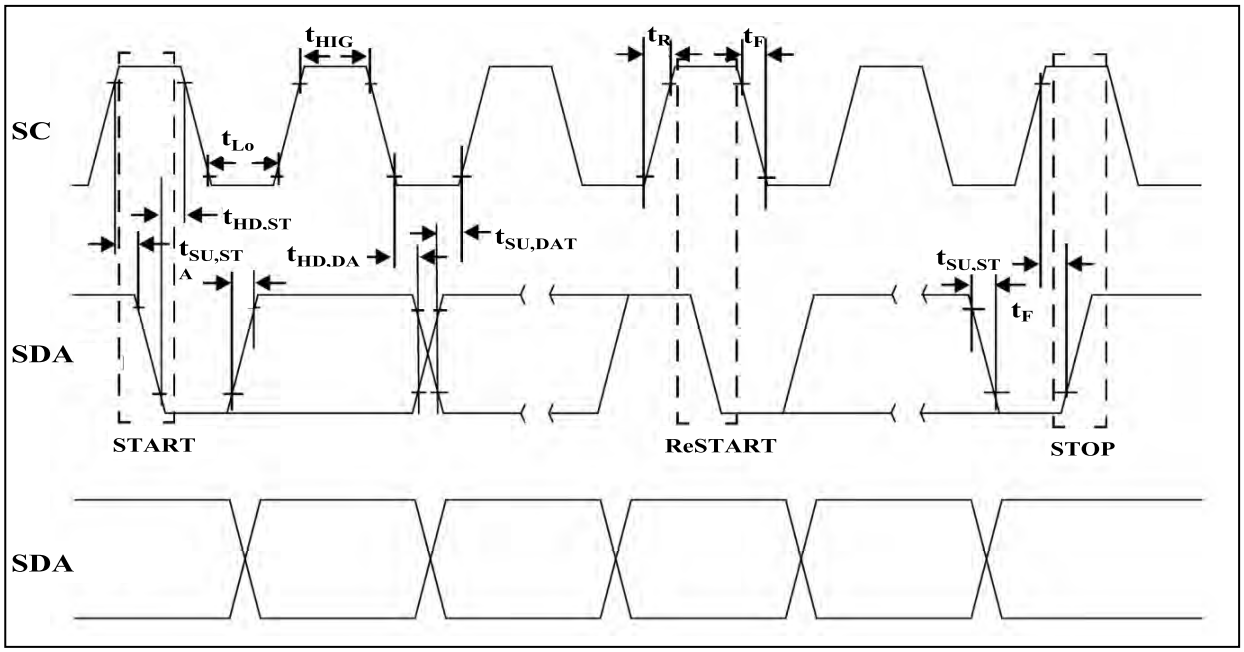

**SFP+ Timing Requirements**

| Parameter | Symbol | Min | Max | Unit | Conditions |
|---|---|---|---|---|---|
| **Tx_Disable assert time** | t_off | | 100 | µs | Rising edge of TX_Disable to fall of output signal below 10% of nominal. |
| **TX_Disable negate time** | T_on | | 2 | ms | Falling edge of TX Disable to rise output sognal above 90% of nominal. This only applies in normal operation, not during start up or fault recovery. |
| **Time to initialize 2-wire interface** | t_2w_start_up | | 300 | ms | From power on or hot plug after the supply meeting |
| **Time to initialize cooled module and time to power up a cooled module to Power Level II** | t_start_up_cooled | | 90 | sec | From power supplies meeting or hot plug, or Tx disable negated during power up or Tx_Fault recovery, until cooled power level II part during fault recovery is fully operational. Also, from stop bit-low-to-high SDA transition enabling Power Level II until cooled module is fully operational. |
| **Tx_Fault assert for cooled module** | Tx_fault_on_cooled | | 1 | ms | From occurrence of fault to assertion of TX_Fault |
| **Tx_Fault Reset** | t_reset | 10 | | µs | Time TX_disable must be held high to reset TX_Fault |
| **RX_LOS assert delay** | t_los_on | | 100 | µs | From occurrence of loss of signal to assertion of RX_LOS |
| **Rx_LOS negate delay** | t_los_off | | 100 | µs | From occurrence of presence of signal to negation of RX_LOS. |
| **Maximum Current Ramp on Power Supply** | | | | | |
| **Icc instantaneous peak current** | | | 800 | mA | Note 1,2 |
| **Icc sustained peak current** | | | 660 | mA | Note 1,2 |

**Notes:**

1. The maximum currents are the allowed currents for each power supply VccT ot VccR, therefore the total module peak currents can be twice this value. The instantaneous peak current is allowed to exceed the specified maximum current capacity of the connector contact for a short period.
2. Not to exceed the sustained peak limit for the more than 50 µs; may exceed this limit for shorter durations.

**Pin Descriptions**

| Pin | Logic | Symbol | Power Sequence Order | Name/Descriptions | Ref. |
|---|---|---|---|---|---|
| **1** | | VeeT | 1 | Module Transmitter Ground | 1 |
| **2** | LVTTL-O | TX_Fault | 3 | Module Transmitter Fault | 2 |
| **3** | LVTTL-I | TX_Disable | 3 | Transmitter Disable; Turn off laser output | 3 |
| **4** | LVTTL-I/O | SDA | 3 | 2-Wire Serial Interface Data Line | |
| **5** | LVTTL-I/O | SCL | 3 | 2-Wire Serial Interface Clock | |
| **6** | | Mod_Abs | 3 | Module Absent, connected to VeeT or VeeR in the module | 4 |
| **7** | LVTTL-I | RS0 | 3 | NA. 30kohm pull down inside the module | |
| **8** | LVTTL-O | RX_LOS | 3 | Receiver Loss of Signal Indicator | 2 |
| **9** | LVTTL-I | RS1 | 3 | NA. 30kohm pull down inside the module | |
| **10** | | VeeR | 1 | Module Receiver Ground | 1 |
| **11** | | VeeR | 1 | Module Receiver Ground | 1 |
| **12** | CML-O | RD- | 3 | Receiver Inverted Data Output (SFI) | |
| **13** | CML-O | RD+ | 3 | Receiver Non-Inverted Data Output (SFI) | |
| **14** | | VeeR | 1 | Module Receiver Ground | 1 |
| **15** | | VccR | 2 | Module Receiver 3.3V Supply | 5 |
| **16** | | VccT | 2 | Module Transmitter 3.3V Supply | 5 |
| **17** | | VeeT | 1 | Module Transmitter Ground | 1 |
| **18** | CML-I | TD+ | 3 | Transmitter Non-Inverted Data Output (SFI) | |
| **19** | CML-I | TD- | 3 | Transmitter Inverted Data Output (SFI) | |
| **20** | | VeeT | 1 | Module Transmitter Ground | 1 |

**Notes:**

1. The module signal ground pins, VeeR and Veet, are isolated from the module case.
2. This pin is an open drain output pib and shall be pulled up with a 4.7k-10kohms to Host_Vcc on the host board. Pull ups can be connected to multiple power supplies, however the host board design shall ensure that no module pin has voltage exceeding module VccT/R + 0.5V.
3. This pin is an input pin with 10kohms pull up to VccT in the module.
4. This pin shall be pulled up with 4.7k-10kohhms to Host_Vcc on the host board.
5. Vcct and VccR are tied together inside the module.

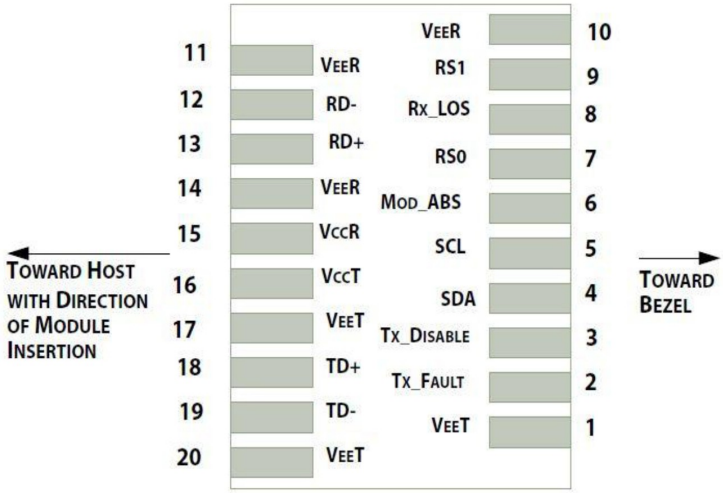


Pin-out of connector Block on Host board

## Recommended Circuit Schematic

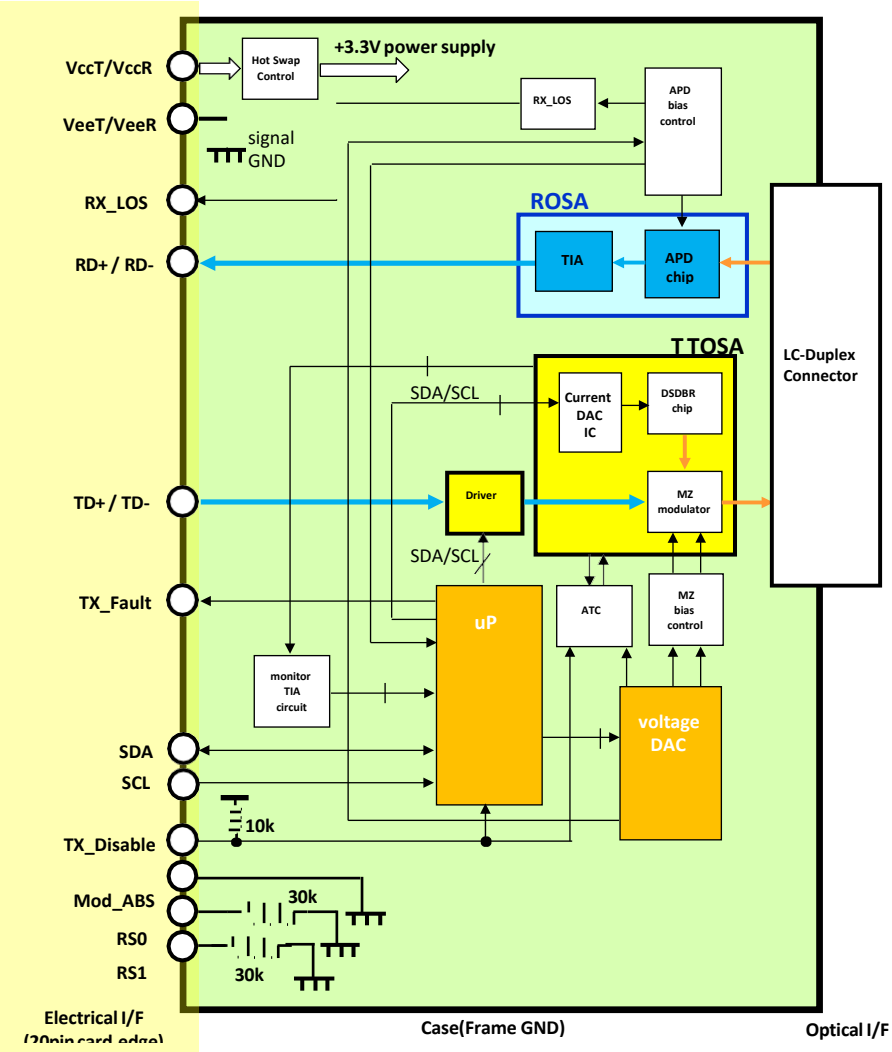

**Mechanical Specifications**

Small Form Factor Pluggable (SFP) transceivers are compatible with the dimensions defined by the SFP Multi-Sourcing Agreement (MSA).

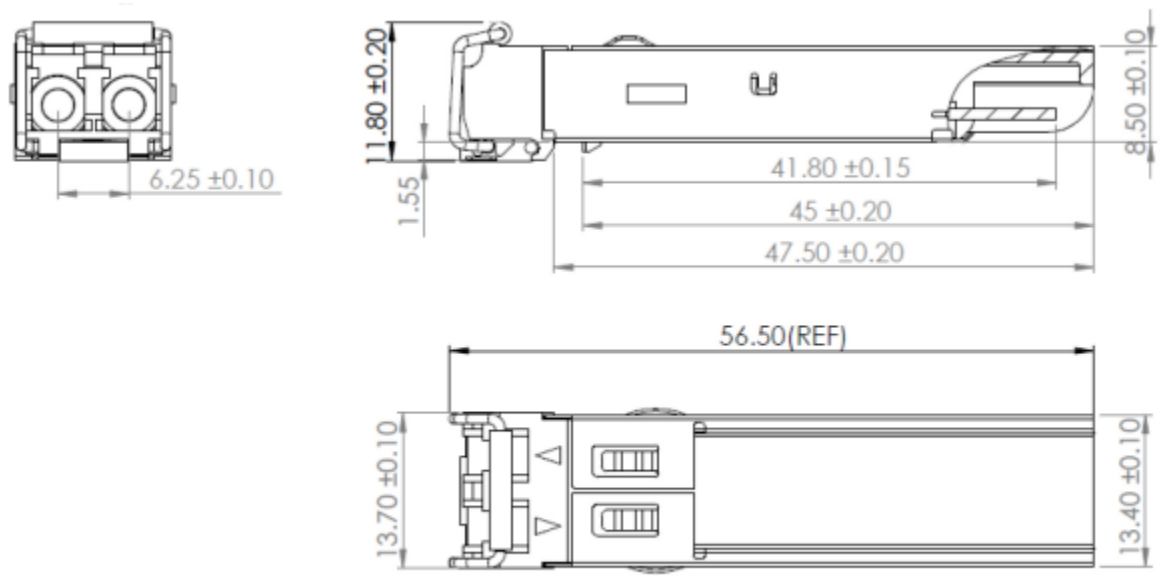


**EEPROM Information**

EEPROM memory map specific data field description is as below:

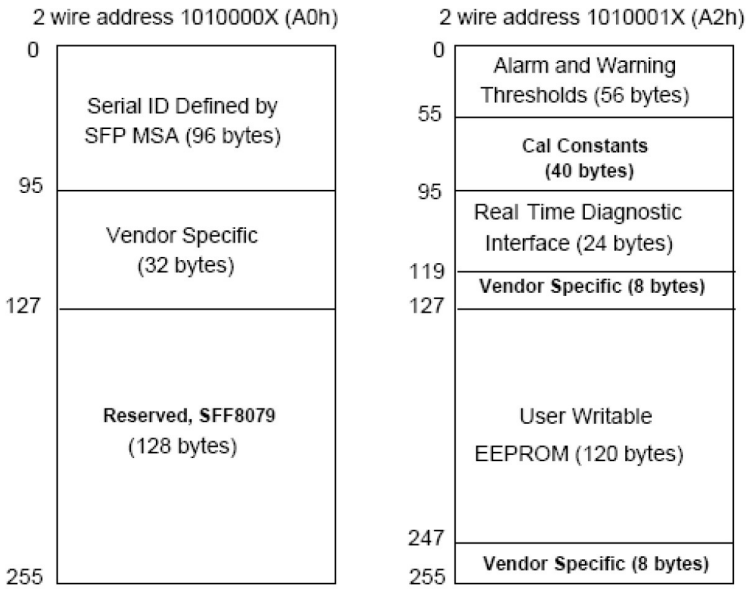

**About AddOn Networks**

In 1999, AddOn Networks entered the market with a single product. Our founders fulfilled a severe shortage for compatible, cost-effective optical transceivers that compete at the same performance levels as leading OEM manufacturers. Adhering to the idea of redefining service and product quality not previously had in the fiber optic networking industry, AddOn invested resources in solution design, production, fulfillment, and global support.

Combining one of the most extensive and stringent testing processes in the industry, an exceptional free tech support center, and a consistent roll-out of innovative technologies, AddOn has continually set industry standards of quality and reliability throughout its history.

Reliability is the cornerstone of any optical fiber network and is ingrained in AddOn's DNA. It has played a key role in nurturing the long-term relationships developed over the years with customers. AddOn remains committed to exceeding industry standards with certifications ranging from NEBS Level 3 to ISO 9001:2015 with every new development while maintaining the signature reliability of its products.


**U.S. Headquarters**

Email: sales@addonnetworks.com

Telephone: +1 877.292.1701

Fax: 949.266.9273

**Europe Headquarters**

Email: salesemea@addonnetworks.com

Telephone: +44 1285 842070