SFP-10GB-CW-57-40-I-AO

MSA Compliant 10GBase-CWDM SFP+ Transceiver (SMF, 1570nm, 40km, LC, DOM, -40 to 85C)

Features:

- SFF-8432 and SFF-8472 Compliance
- Duplex LC Connector
- Industrial Temperature -40 to 85 Celsius
- Single-mode Fiber
- Hot Pluggable
- Excellent ESD Protection
- Metal with Lower EMI
- RoHS Compliant and Lead Free

Applications:

- 8x/10x Fibre Channel
- 10x Gigabit Ethernet over CWDM
- Access, Metro and Enterprise
- Mobile Fronthaul CPRI/OBSAI

Product Description

This MSA compliant SFP+ transceiver provides 10GBase-CWDM throughput up to 40km over single-mode fiber (SMF) using a wavelength of 1570nm via an LC connector. It is capable of withstanding rugged environments and can operate at temperatures between -40 and 85C. The listed reach has been determined using a link budget calculation and tested in a standard environment. Actual link distances achieved will be dependent upon the deployed environment. All of our transceivers are built to comply with Multi-Source Agreement (MSA) standards and are uniquely serialized and tested for data-traffic and application to ensure seamless network integration. Additional product features include Digital Optical Monitoring (DOM) support which allows access to real-time operating parameters. We stand behind the quality of our products and proudly offer a limited lifetime warranty.

AddOn's transceivers are RoHS compliant and lead-free.

Regulatory Compliance

- ESD to the Electrical PINs: compatible with MIL-STD-883E Method 3015.4
- ESD to the LC Receptacle: compatible with IEC 61000-4-3
- EMI/EMC compatible with FCC Part 15 Subpart B Rules, EN55022:2010
- Laser Eye Safety compatible with FDA 21CFR, EN60950-1& EN (IEC) 60825-1,2
- RoHS compliant with EU RoHS 2.0 directive 2015/863/EU

CWDM Available Wavelengths

Wavelengths	Min.	Typ.	Max.
47	1464.5	1471	1477.5
49	1484.5	1491	1497.5
51	1504.5	1511	1517.5
53	1524.5	1531	1537.5
55	1544.5	1551	1557.5
57	1564.5	1571	1577.5
59	1584.5	1591	1597.5
61	1604.5	1611	1617.5

Absolute Maximum Ratings

Parameter	Symbol	Min.	Typ.	Max.	Unit	Notes
Maximum Supply Voltage	Vcc	-0.5		4.0	V	1
Storage Temperature	TS	-40		85	°C	2
Operating Case Temperature	Tc	-40		85	°C	
Data Rate	DR	1.2		11.3	Gb/s	3
Bit Error Rate	BER			10^{-12}		

Notes:

1. For electrical power interface
2. Ambient temperature
3. IEEE 802.3ae

Electrical Characteristics (V_{CC}=3.14V to 3.46V, T_C)

Parameter	Symbol	Min.	Typ.	Max.	Unit	Notes
Power Supply Voltage	Vcc	3.14	3.3	3.46	V	
Power Supply Current	Icc		400	450	mA	
Transmitter						
Input differential impedance	R_{IN}		100		Ω	
Differential data input swing	$V_{IN\ PP}$	120		850	mV	
Transmit Disable Voltage	V_D	2		V_{CC}	V	
Transmit Enable Voltage	V_{EN}	V_{EE}		V_{EE}+0.8	V	
Receiver						
Differential data output swing	$V_{OUT\ PP}$	300		850	mV	
Data output rise time/fall time (20%-80%)	t_r /t_f	28			ps	
LOS Fault	$V_{LOS\ A}$	2		$V_{CC\ HOST}$	V	
LOS Normal	$V_{LOS\ D}$	V_{EE}		V_{EE}+0.5	V	

Optical Characteristics

Parameter	Symbol	Min.	Typ.	Max.	Unit	Notes
Transmitter						
Output Optical Power	P_{TX}	-1		4	dBm	1
Optical Center Wavelength	λ_C	λ-6	λ	λ+6	nm	
Optical Modulation Amplitude	OMA	-5.2				2
Extinction Ratio	ER	8.2			dB	
Spectral Width (-20dB)	Δλ			0.6	nm	
Side Mode Suppression Ratio	SMSR	30			dB	
Relative Intensity Noise	RIN			-128	dB/Hz	
Transmitter Dispersion Penalty	TDP			2	dB	
Launch Power of OFF Transmitter	P_{OUT_OFF}			-30	dBm	1
Transmitter Jitter	According to IEEE 802.3ae requirement					
Receiver						
Optical Center Wavelength	λ_C	1260		1620	nm	
Average Receive Power	P_{RX}	-16		-1	dBm	
Receiver Sensitivity @10.3Gb/s	R_{X_SEN}			-16	dBm	3
Receiver Reflectance	TR_{RX}			-27	dB	
LOS Assert	LOS_A	-25			dBm	

LOS De-Assert	LOS_D			-18	dBm	
LOS Hysteresis	LOS_H	0.5			dB	

Notes:

1. Average
2. Per IEEE 802.3ae
3. Measured with worst ER: BER<10^{-12}; 2^{31}-1 PRBS

Pin Descriptions

Pin	Symbol	Name/Descriptions	Ref.
1	VeeT	Transmitter Ground (Common with Receiver Ground).	1
2	TX Fault	Transmitter Fault. LVTTL-O	2
3	TX Disable	Transmitter Disable. Laser output disabled on high or open. LVTT-I.	3
4	SDA	2-Wire Serial Interface Data Line (Same as MOD-DEF2 in INF-8074i). LVTTL-I/O.	
5	SCL	2-Wire Serial Interface Data Line (Same as MOD-DEF2 in INF-8074i). LVTTL-I.	
6	MOD_ABS	Module Absent, Connect to VeeT or VeeR in Module.	4
7	RS0	Rate Select 0. Not used	5
8	LOS	Loss of Signal indication. Logic 0 indicates normal operation. LVTTL-O.	2
9	RS1	Rate Select 1. Not used	5
10	VeeR	Receiver Ground (Common with Transmitter Ground).	1
11	VeeR	Receiver Ground (Common with Transmitter Ground).	1
12	RD-	Receiver Inverted DATA out. AC Coupled. CML-O.	
13	RD+	Receiver Non-inverted DATA out. AC Coupled. CML-O.	
14	VeeR	Receiver Ground (Common with Transmitter Ground).	1
15	VccR	Receiver Power Supply.	
16	VccT	Transmitter Power Supply.	
17	VeeT	Transmitter Ground (Common with Receiver Ground).	1
18	TD+	Transmitter Non-Inverted DATA in. AC Coupled. CML-I.	
19	TD-	Transmitter Inverted DATA in. AC Coupled. CML-O.	
20	VeeT	Transmitter Ground (Common with Receiver Ground).	1

Notes:

1. The module signal ground contacts, VeeR and VeeT, should be isolated from the module case.
2. This contact is an open collector/drain output and should be pulled up to the Vcc_Host with resister in the range 4.7KΩ to 10KΩ. Pull ups can be connected to one or several power supplies, however the host board design shall ensure that no module contract has voltage exceeding module VccT/R +0.5.V.
3. Tx_Disable is an input contact with a 4.7KΩ to 10KΩ pull-up resistor to VccT inside module.

4. Mod_ABS is connected to VeeT or VeeR in the SFP+ module. The host may pull the contract up to Vcc_Host with a resistor in the range from 4.7KΩ to 10KΩ. Mod_ABS is asserted “High” when the SFP+ module is physically absent from a host slot.
5. Internally pulled down per SFF-8431

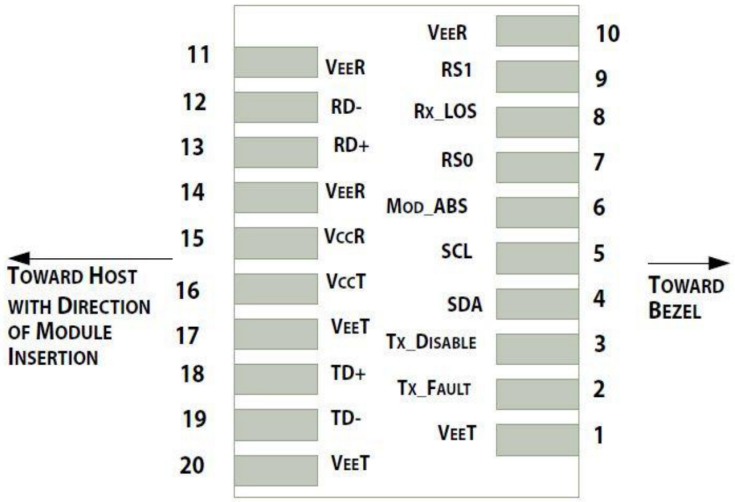

Pin-out of connector Block on Host board

Recommended Circuit Schematic

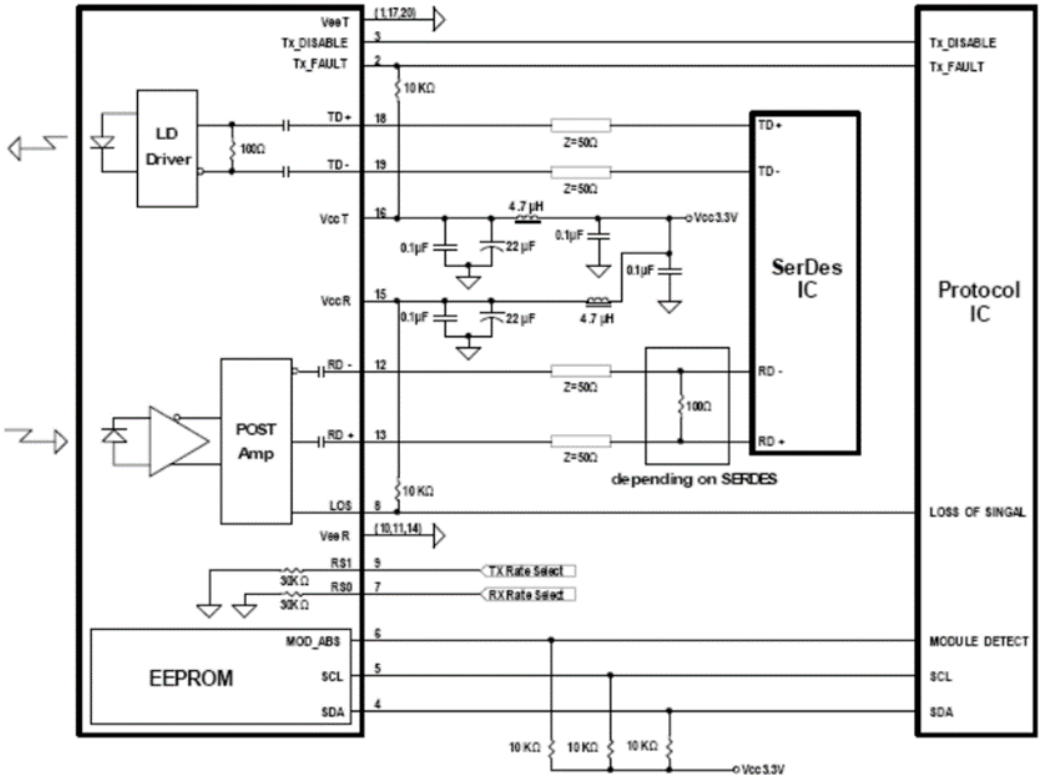

Mechanical Specifications

Small Form Factor Pluggable (SFP) transceivers are compatible with the dimensions defined by the SFP Multi-Sourcing Agreement (MSA).

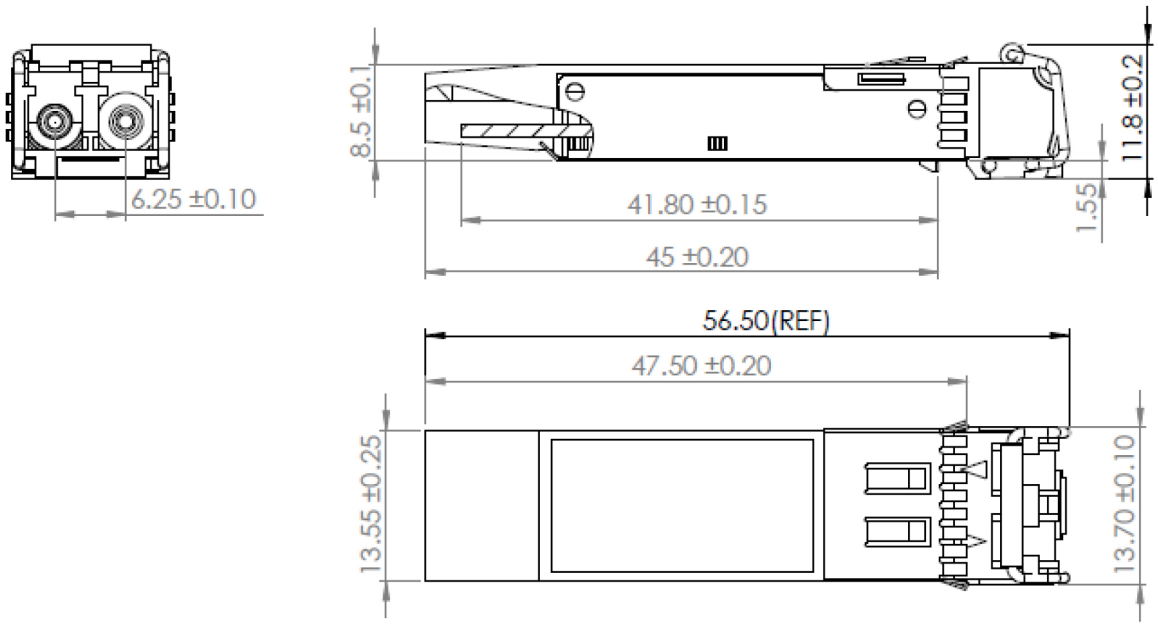

EEPROM Information

EEPROM memory map specific data field description is as below:

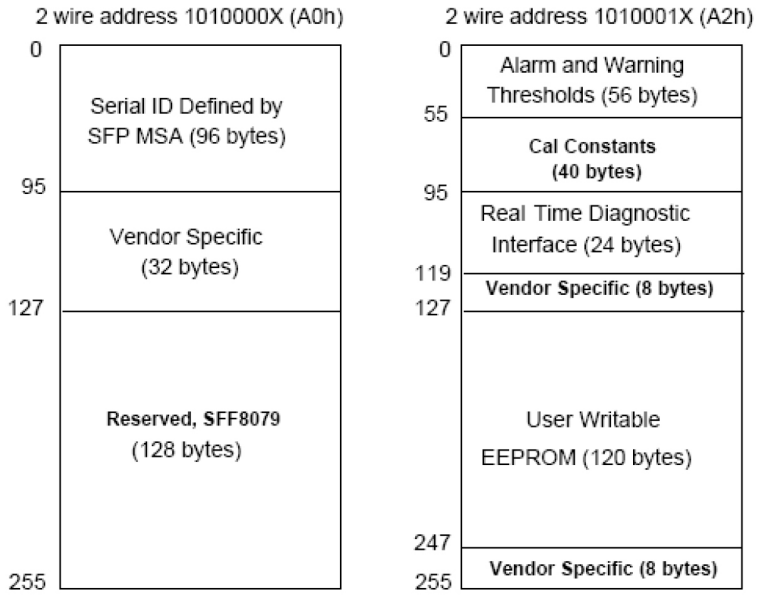

About AddOn Networks

In 1999, AddOn Networks entered the market with a single product. Our founders fulfilled a severe shortage for compatible, cost-effective optical transceivers that compete at the same performance levels as leading OEM manufacturers. Adhering to the idea of redefining service and product quality not previously had in the fiber optic networking industry, AddOn invested resources in solution design, production, fulfillment, and global support.

Combining one of the most extensive and stringent testing processes in the industry, an exceptional free tech support center, and a consistent roll-out of innovative technologies, AddOn has continually set industry standards of quality and reliability throughout its history.

Reliability is the cornerstone of any optical fiber network and is ingrained in AddOn's DNA. It has played a key role in nurturing the long-term relationships developed over the years with customers. AddOn remains committed to exceeding industry standards with certifications ranging from NEBS Level 3 to ISO 9001:2015 with every new development while maintaining the signature reliability of its products.

U.S. Headquarters

Email: sales@addonnetworks.com

Telephone: +1 877.292.1701

Fax: 949.266.9273

Europe Headquarters

Email: salesemea@addonnetworks.com

Telephone: +44 1285 842070