XFP-10GB-CW47-80-I-AO

MSA Compliant 10GBase-CWDM XFP Transceiver (SMF, 1470nm, 80km, LC, DOM, -40 to 85C)

Features:

- INF-8077i Compliance
- Duplex LC Connector
- Industrial Temperature -40 to 85 Celsius
- Single-mode Fiber
- Hot Pluggable
- Excellent ESD Protection
- Metal with Lower EMI
- RoHS Compliant and Lead Free

Applications:

- 8x/10x Fibre Channel
- 10x Gigabit Ethernet over CWDM
- Access, Metro and Enterprise
- Mobile Fronthaul CPRI/OBSAI

Product Description

This MSA compliant XFP transceiver provides 10GBase-CWDM throughput up to 80km over single-mode fiber (SMF) using a wavelength of 1470nm via an LC connector. It is capable of withstanding rugged environments and can operate at temperatures between -40 and 85C. The listed reach has been determined using a link budget calculation and tested in a standard environment. Actual link distances achieved will be dependent upon the deployed environment. All of our transceivers are built to comply with Multi-Source Agreement (MSA) standards and are uniquely serialized and tested for data-traffic and application to ensure seamless network integration. Additional product features include Digital Optical Monitoring (DOM) support which allows access to real-time operating parameters. We stand behind the quality of our products and proudly offer a limited lifetime warranty.

AddOn's transceivers are RoHS compliant and lead-free.

CWDM Available Wavelengths

Wavelength	Min.	Typ.	Max.
47	1465	1471	1477
49	1485	1491	1497
51	1505	1511	1517
53	1525	1531	1537
55	1545	1551	1557
57	1565	1571	1577
59	1585	1591	1597
61	1605	1611	1617

Absolute Maximum Ratings

Parameter	Symbol	Min.	Typ.	Max.	Unit	Notes
Storage Temperature	Tstg	-40		85	℃	
Supply Voltage - 5V	Vcc5	-0.5		5.5		
Supply Voltage - 3.3V	Vcc3	-0.5		4	V	
Data Rate	DR	9.95		11.3	Gbps	
Bit Error Rate	BER			10^{-12}		
Operating Case Temperature	Tc	-40		85	°C	2

Notes:

1. Operating environment.
2. Case temperature.

Electrical Characteristics

Parameter	Symbol	Min.	Typ.	Max.	Unit	Notes
Total Power Consumption	PC			2.5	W	
Power Supply Voltage - 5V	Vcc5	4.75	5.0	5.25	V	1
Power Supply Voltage - 3.3V	Vcc3	3.14		3.46	V	1
Power Supply Current - Vcc5	Icc5			350	mA	
Power Supply Current - Vcc3	Icc3			500	mA	
Transmitter						
Input Differential Impedance	RIN		100		Ω	2
Differential Data Input Swing	VIN,pp	120		820	mV	
Transmit Disable Voltage	VD	2		Vcc	V	3
Transmit Enable Voltage	VEN	GND		GND+0.8	V	
Transmit Disable Assert Time				10	us	
Receiver						
Differential Data Output Swing	VOUT,pp	340	650	850	mV	
Data Output Rise/Fall Time (20-80%)	Tr/Tf			38	ps	
LOS Fault	VLOSA	Vcc-0.5		Host_Vcc	V	
LOS Normal	VLOSD	GND		GND+0.5	V	

Notes:

1. Operating environment.
2. After internal AC coupling.
3. Or open circuit.

Optical Characteristics

Parameter	Symbol	Min.	Typ.	Max.	Unit	Notes
Transmitter						
Output Optical Power	PTX	0		4	dBm	1
Optical Center Wavelength	λC	1465	1471	1477		
Extinction Ratio	ER	9			dB	
Side-Mode Suppression Ratio	SMSR	30			dB	
Relative Intensity Noise	RIN			-130	dB/Hz	
Transmitter Dispersion Penalty	TDP			3	dB	
Launch Power of Off Transmitter	Poff			-30	dBm	1
Transmitter Jitter (Pk-Pk)	TJ			0.1	UI	
Receiver						
Center Wavelength Range	λC	1260		1600	nm	
Receiver Overload	POL	-7			dBm	
Receiver Sensitivity @10.3Gbps	RX_SEN			-24	dBm	2
Receiver Reflectance	TRRX			-27	dB	
LOS Assert	LOSA	-35			dBm	
LOS De-Assert	LOSD			-27	dBm	
LOS Hysteresis	LOSH	0.5			dB	

Notes:

1. Average.
2. Measured with worst ER, BER<10^{-12}, and 2^{31}-1 PRBS.

Pin Descriptions

Pin	Symbol	Name/Description	Notes
1	GND	Module Ground.	1
2	Vee5	Optional -5.2 Power Supply. Not Required.	
3	MOD_DESEL	Module De-Select. When held "low," allows the module to respond to 2-wire serial interface commands.	
4	Interrupt	Indicates the presence of an important condition which can be read over the serial 2-wire interface.	2
5	Tx_Disable	Transmitter Disable. Transmitter laser source is turned off.	
6	Vcc5	+5V Power Supply.	
7	GND	Module Ground.	1
8	Vcc3	+3.3V Power Supply.	
9	Vcc3	+3.3V Power Supply.	
10	SCL	2-Wire Serial Interface Clock.	2
11	SDA	2-Wire Serial Interface Data.	2
12	MOD_ABS	Module Absent. Indicates that the module is not present. Grounded within the module.	2
13	MOD_NR	Module Not Ready. Indicates a module operating fault.	2
14	Rx_LOS	Receiver Loss of Signal Indicator.	2
15	GND	Module Ground.	1
16	GND	Module Ground.	1
17	RD-	Receiver Inverted Data Output.	
18	RD+	Receiver Non-Inverted Data Output.	
19	GND	Module Ground.	1
20	Vcc2	+1.8V Power Supply.	
21	PDown/RST	Power Down. When "high," places the module in the low-power stand-by mode and, on the falling edge of P_Down, initiates a module reset.	
		Reset. The falling edge initiates a complete reset of the module including the 2-wire serial interface, equivalent to a power cycle.	
22	Vcc2	+1.8V Power Supply.	
23	GND	Module Ground.	1
24	RefCLK+	Reference Clock Non-Inverted Input. AC coupled on the host board.	
25	RefCLK-	Reference Clock Inverted Input. AC coupled on the host board.	
26	GND	Module Ground.	1
27	GND	Module Ground.	1
28	TD-	Transmitter Inverted Data Input.	
29	TD+	Transmitter Non-Inverted Data Input.	
30	GND	Module Ground.	1

Notes:

1. The module ground pins (GND) are isolated from the module case and chassis ground within the module.
2. Open collector. Should be pulled up with 4.7kΩ to 10kΩ on the host board to a voltage between 3.15V and 3.6V.

Electrical Pad Layout

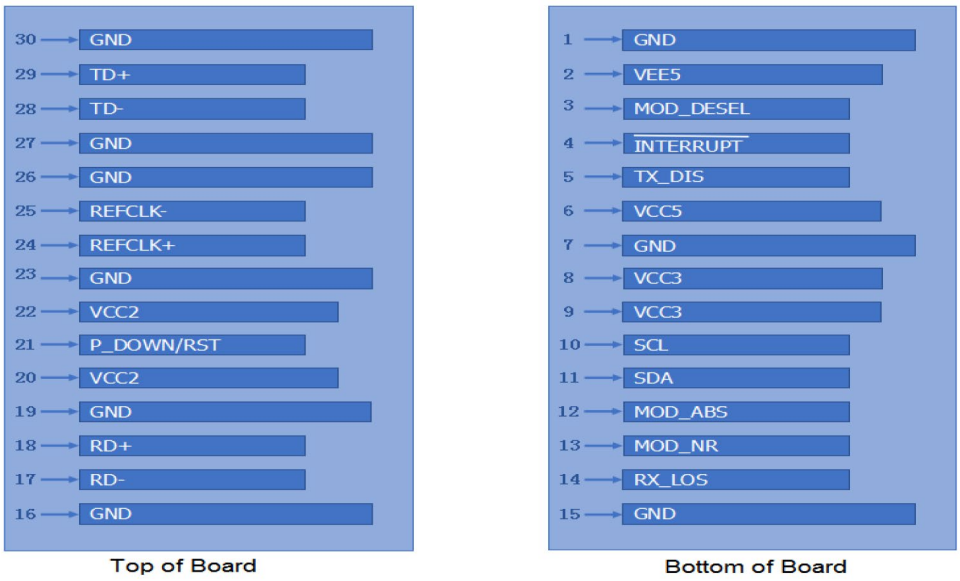

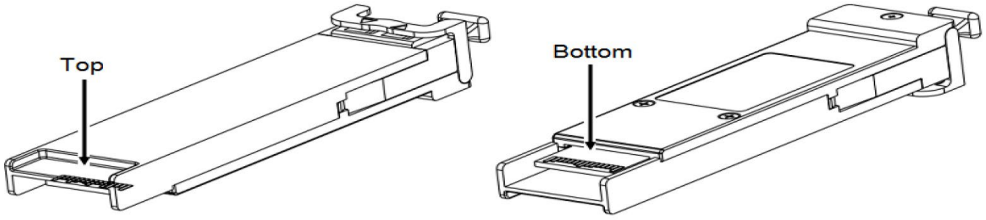

Block Diagram

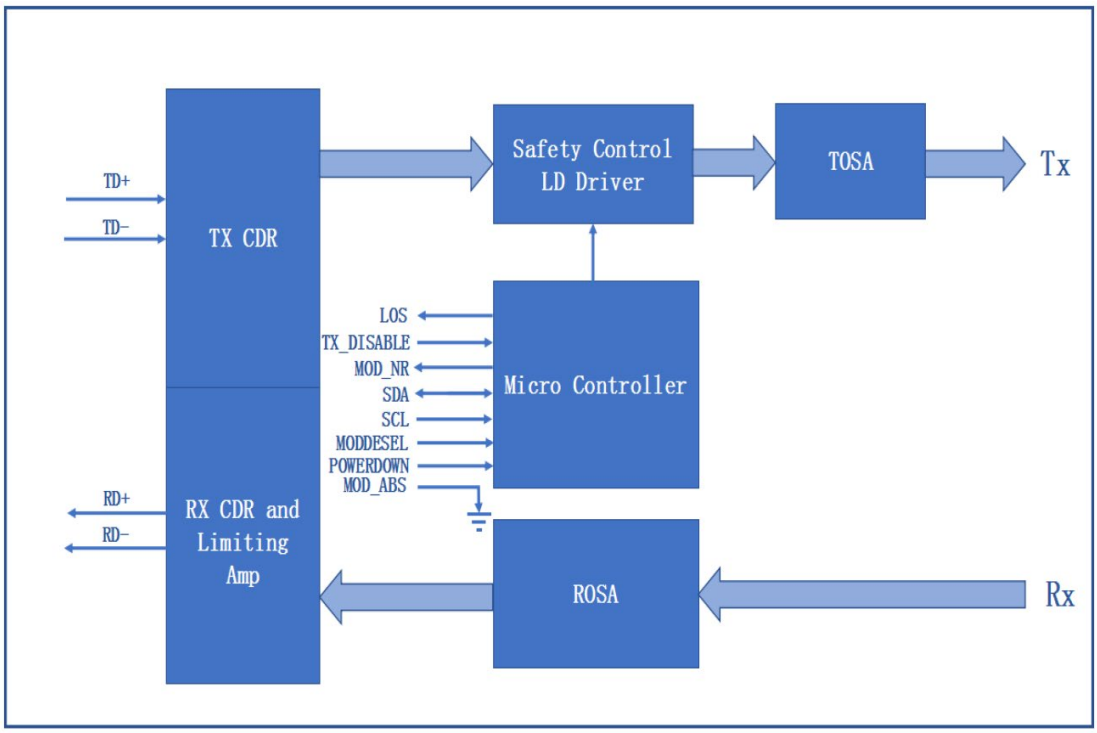

Mechanical Specifications

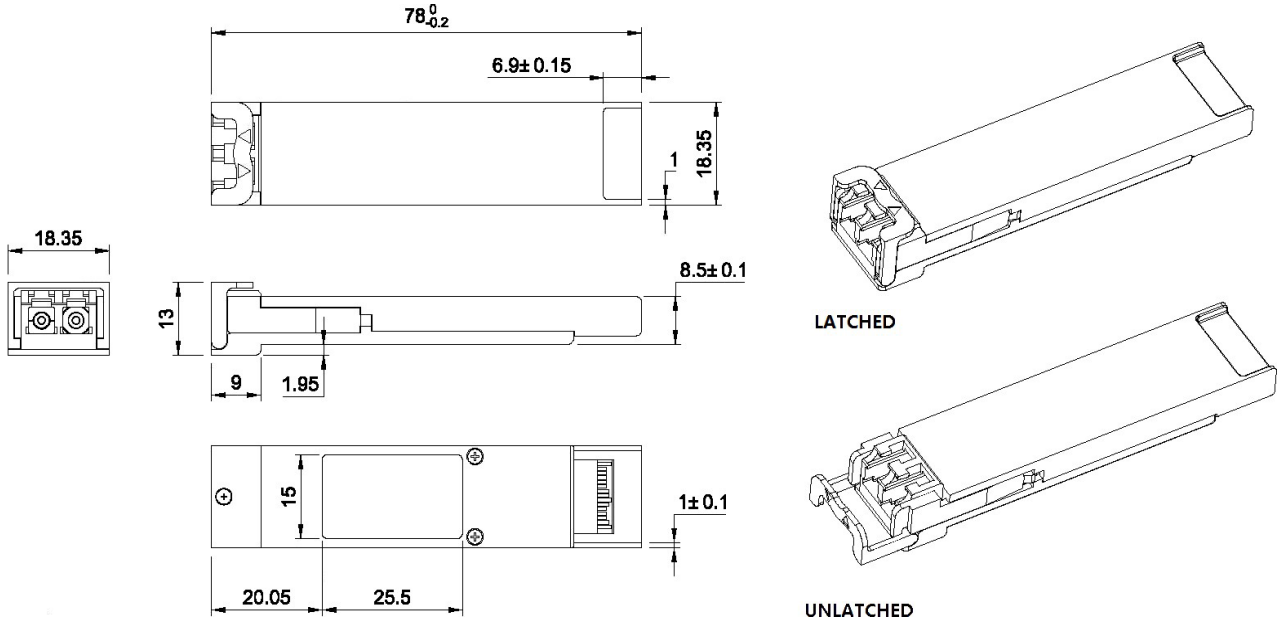

All dimensions are ±0.2mm unless otherwise specified.

Unit: mm

About AddOn Networks

In 1999, AddOn Networks entered the market with a single product. Our founders fulfilled a severe shortage for compatible, cost-effective optical transceivers that compete at the same performance levels as leading OEM manufacturers. Adhering to the idea of redefining service and product quality not previously had in the fiber optic networking industry, AddOn invested resources in solution design, production, fulfillment, and global support.

Combining one of the most extensive and stringent testing processes in the industry, an exceptional free tech support center, and a consistent roll-out of innovative technologies, AddOn has continually set industry standards of quality and reliability throughout its history.

Reliability is the cornerstone of any optical fiber network and is ingrained in AddOn's DNA. It has played a key role in nurturing the long-term relationships developed over the years with customers. AddOn remains committed to exceeding industry standards with certifications ranging from NEBS Level 3 to ISO 9001:2015 with every new development while maintaining the signature reliability of its products.

U.S. Headquarters

Email: sales@addonnetworks.com

Telephone: +1 877.292.1701

Fax: 949.266.9273

Europe Headquarters

Email: salesemea@addonnetworks.com

Telephone: +44 1285 842070