02310QBJ-C-AO

Huawei 02310QBJ-C (SFP-10G-BXU) Compatible TAA 10GBase-BX SFP+ Transceiver (SMF, 1270nmTx/1330nmRx, 10km, LC, DOM)

Features:

- SFF-8432 and SFF-8472 Compliance
- Uncooled DFB transmitter and PIN receiver
- Simplex LC Connector
- Commercial Temperature 0 to 70 Celsius
- Single-mode Fiber
- Hot Pluggable
- Excellent ESD Protection
- Metal with Lower EMI
- RoHS Compliant and Lead Free



Applications:

- 8x/10x Fibre Channel
- 10GBase-BX Ethernet
- Access, Metro and Enterprise

Product Description

This Huawei 02310QBJ-C (SFP-10G-BXU) compatible SFP+ transceiver provides 10GBase-BX throughput up to 10km over single-mode fiber (SMF) using a wavelength of 1270nmTx/1330nmRx via an LC connector. This bidirectional unit must be used with another transceiver or network appliance of complementing wavelengths. It is guaranteed to be 100% compatible with the equivalent Huawei transceiver. This easy to install, hot swappable transceiver has been programmed, uniquely serialized and data-traffic and application tested to ensure that it will initialize and perform identically. Digital optical monitoring (DOM) support is also present to allow access to real-time operating parameters. This transceiver is Trade Agreements Act (TAA) compliant. We stand behind the quality of our products and proudly offer a limited lifetime warranty.

AddOn's transceivers are RoHS compliant and lead-free.

TAA refers to the Trade Agreements Act (19 U.S.C. & 2501-2581), which is intended to foster fair and open international trade. TAA requires that the U.S. Government may acquire only "U.S.-made or designated country end products."

TAA COMPLIANT

Regulatory Compliance

- ESD to the Electrical PINs: compatible with MIL-STD-883E Method 3015.4.
- ESD to the LC Receptacle: compatible with IEC 61000-4-3.
- EMI/EMC: compatible with FCC Part 15 Subpart B Rules, EN55022:2010.
- Laser Eye Safety: compatible with FDA 21CFR, EN60950-1& EN (IEC) 60825-1, 2.
- RoHS: compliant with EU RoHS 2.0 directive 2015/863/EU.

Absolute Maximum Ratings

Parameter	Symbol	Min.	Typ.	Max.	Unit	Notes
Maximum Supply Voltage	Vcc	-0.5		4.0	V	1
Storage Temperature	Tstg	-40		85	°C	2
Operating Case Temperature	Tc	0		70	°C	3
Data Rate	DR	9.83		11.3	Gbps	4
Bit Error Rate	BER			10^{-12}		
Supply Current	Icc		200	350	mA	1

Notes:

1. For electrical power interface.
2. Ambient temperature.
3. Case temperature.
4. IEEE 802.3ae.

Electrical Characteristics

Parameter	Symbol	Min.	Typ.	Max.	Unit	Notes
Power Supply Voltage	Vcc	3.14	3.3	3.46	V	
Power Dissipation	P_{DISS}		0.65	1.2	W	
Transmitter						
Input Differential Impedance	RIN		100		Ω	
Differential Data Input Swing	VIN,pp	180		700	mV	
Transmit Disable Voltage	VD	2.0		Vcc	V	
Transmit Enable Voltage	VEN	Vee		Vee+0.8	V	
Receiver						
Differential Data Output Swing	Vout,pp	300		850	mV	
Data Output Rise Time/Fall Time (20-80%)	Tr/Tf	28			ps	
LOS Assert	LOSA	2		Host_Vcc	V	
LOS De-Assert	LOSD	Vee		Vee+0.5	V	

Optical Characteristics

Parameter	Symbol	Min.	Typ.	Max.	Unit	Notes
Transmitter						
Output Optical Power	Ptx	-8.2		0.5	dBm	1
Optical Center Wavelength	λC	1260	1270	1280	nm	
Extinction Ratio	ER	3.5			dB	
Spectral Width (-20dB)	Δλ			0.6	nm	
Side-Mode Suppression Ratio	SMSR	30			dB	
Relative Intensity Noise	RIN			-128	dB/Hz	
Transmitter Dispersion Penalty	TDP			3.2	dB	
Launch Power of Off Transmitter	Poff			-30	dBm	1
Transmitter Jitter	According to IEEE 802.3ae Requirement					
Receiver						
Receiver Overload		0.5			dBm	
Optical Center Wavelength	λC	1320	1330	1340	nm	
Receiver Sensitivity	S			-14.4	dBm	2
Receiver Reflectance				-12	dB	
LOS Assert	LOSA	-30			dBm	
LOS De-Assert	LOSD			-17	dBm	
LOS Hysteresis	LOSH	0.5			dB	

Notes:

1. Average.
2. Average. Measured with worst ER: BER<10^{-12} and 2^{31}-1 PRBS.

Pin Descriptions

Pin	Symbol	Name/Descriptions	Notes
1	VeeT	Transmitter Ground. Common with receiver ground.	1
2	Tx_Fault	Transmitter Fault.	2
3	Tx_Disable	Transmitter Disable. Laser output disabled on "high" or "open."	3
4	SDA	2-Wire Serial Interface Data.	4
5	SCL	2-Wire Serial Interface Clock.	4
6	MOD_ABS	Module Absent. Grounded within the module.	4
7	RS0	No connection required.	
8	LOS	Loss of Signal indication. "Logic 0" indicates normal operation.	5
9	RS1	No connection required.	1
10	VeeR	Receiver Ground. Common with transmitter ground.	1
11	VeeR	Receiver Ground. Common with transmitter ground.	1
12	RD-	Receiver Inverted Data Out. AC coupled.	
13	RD+	Receiver Non-Inverted Data Out. AC coupled.	
14	VeeR	Receiver Ground. Common with transmitter ground.	1
15	VccR	Receiver Power Supply.	
16	VccT	Transmitter Power Supply.	
17	VeeT	Transmitter Ground. Common with receiver ground.	1
18	TD+	Transmitter Non-Inverted Data In. AC coupled.	
19	TD-	Transmitter Inverted Data In. AC coupled.	
20	VeeT	Transmitter Ground. Common with receiver ground.	1

Notes:

1. Circuit ground is isolated from the chassis ground.
2. Tx_Fault is the open collector output and should be pulled up with 4.7kΩ-10kΩ on the host board to a voltage between 2V and Vcc+0.3V.
3. Disabled: TDIS>2V or open. Enabled TDIS<0.8V.
4. Should be pulled up with the 4.7kΩ-10kΩ on the host board to a voltage between 2V and Vcc+0.3V.
5. LOS is open collector output and should be pulled with 4.7kΩ-10kΩ on the host board to a voltage between 2V and Vcc+0.3V. The logic “0” indicates normal operation, and the logic “1” indicates that the receiver signal is lost.

Transceiver Block Diagram

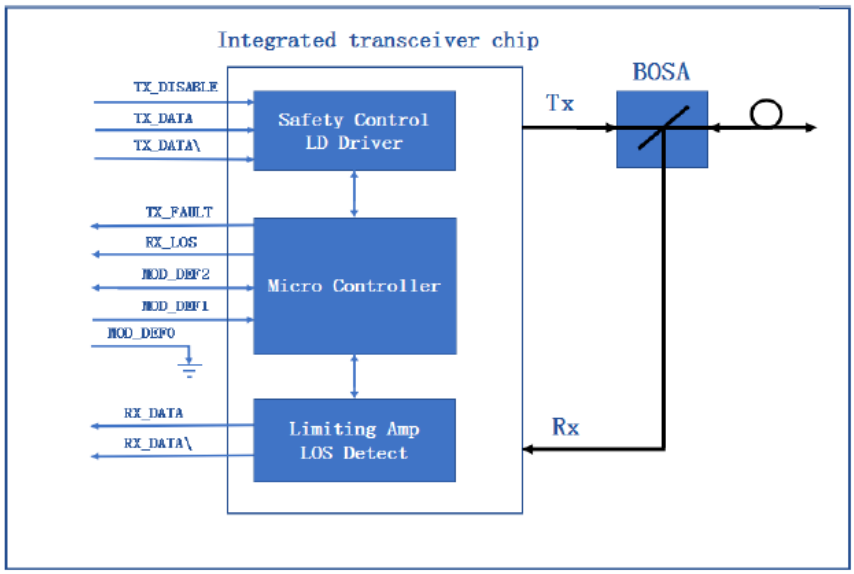

Electical Pad Layout

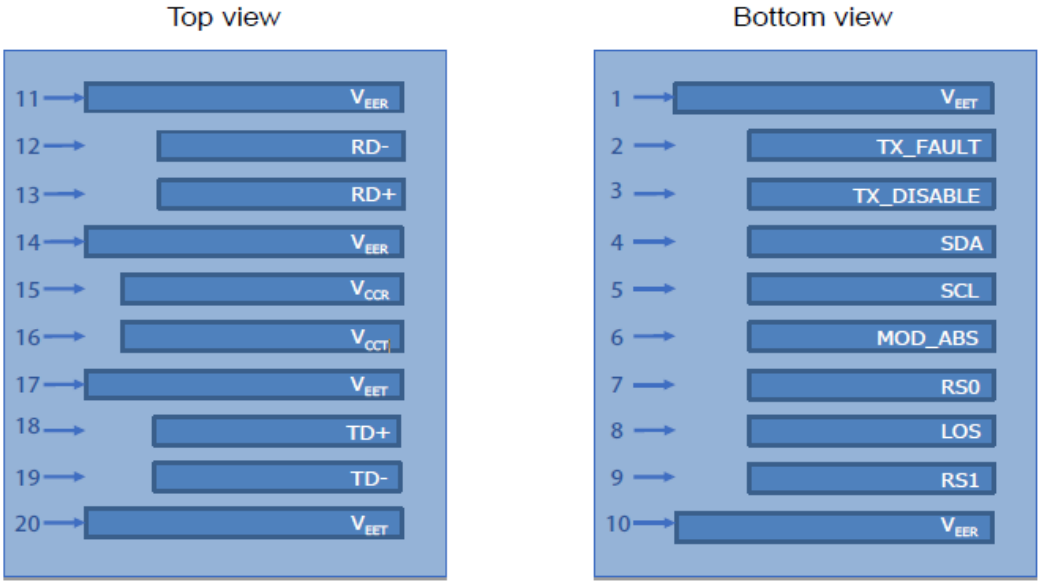

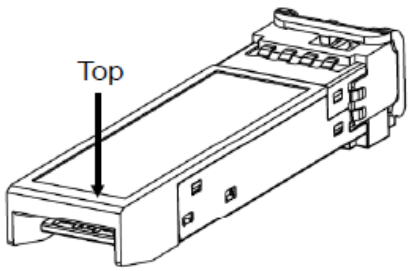

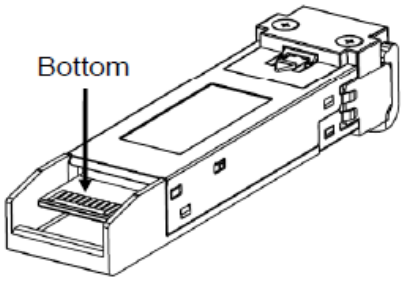

Mechanical Specifications

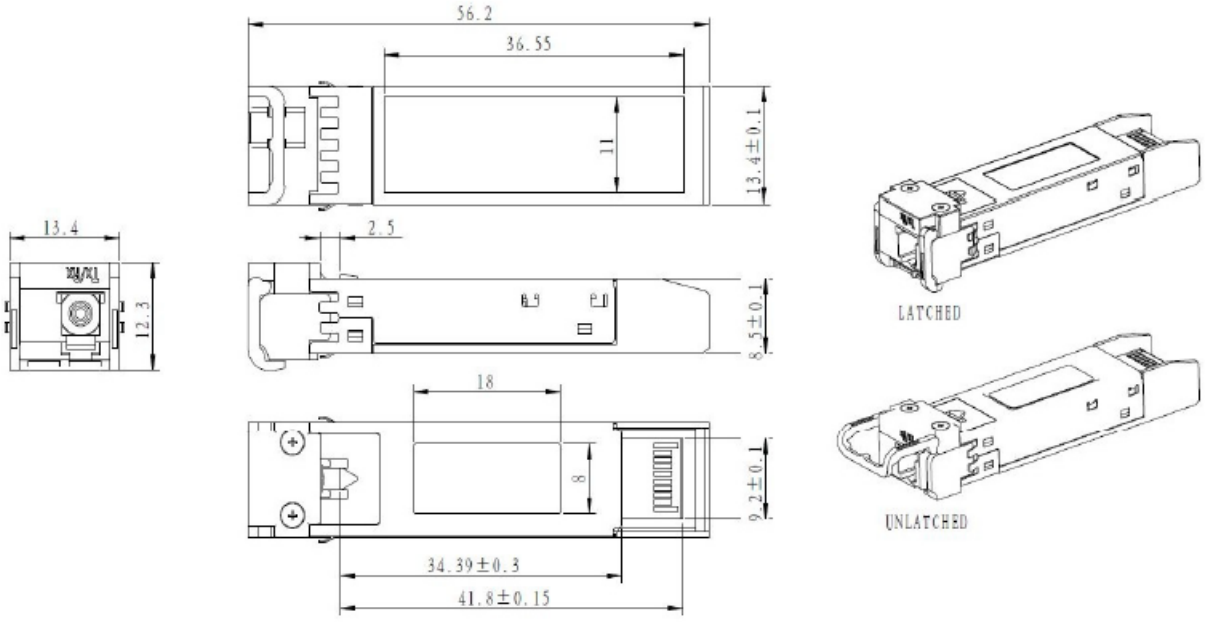

About AddOn Networks

In 1999, AddOn Networks entered the market with a single product. Our founders fulfilled a severe shortage for compatible, cost-effective optical transceivers that compete at the same performance levels as leading OEM manufacturers. Adhering to the idea of redefining service and product quality not previously had in the fiber optic networking industry, AddOn invested resources in solution design, production, fulfillment, and global support.

Combining one of the most extensive and stringent testing processes in the industry, an exceptional free tech support center, and a consistent roll-out of innovative technologies, AddOn has continually set industry standards of quality and reliability throughout its history.

Reliability is the cornerstone of any optical fiber network and is ingrained in AddOn's DNA. It has played a key role in nurturing the long-term relationships developed over the years with customers. AddOn remains committed to exceeding industry standards with certifications ranging from NEBS Level 3 to ISO 9001:2015 with every new development while maintaining the signature reliability of its products.



U.S. Headquarters

Email: sales@addonnetworks.com

Telephone: +1 877.292.1701

Fax: 949.266.9273

Europe Headquarters

Email: salesemea@addonnetworks.com

Telephone: +44 1285 842070