SFP-10GB-50DW45-80-AR-C

Arista Networks® Compatible TAA 10GBase-DWDM SFP+ Transceiver C-Band 50GHz (SMF, 1541.35nm, 80km, LC, DOM)

Features:

- SFF-8432 and SFF-8472 Compliance
- Duplex LC Connector
- Single-mode Fiber
- Commercial Temperature 0 to 70 Celsius
- Hot Pluggable
- Metal with Lower EMI
- Excellent ESD Protection
- RoHS Compliant and Lead Free

Applications:

- 10x Gigabit Ethernet over DWDM
- 8x/10x Fibre Channel
- Access and Enterprise

Product Description

This Arista Networks® compatible SFP+ transceiver provides 10GBase-DWDM throughput up to 80km over single-mode fiber (SMF) using a wavelength of 1541.35nm via an LC connector. It can operate at temperatures between 0 and 70C. Our transceiver is built to meet or exceed OEM specifications and is guaranteed to be 100% compatible with Arista Networks®. It has been programmed, uniquely serialized, and tested for data-traffic and application to ensure that it will initialize and perform identically. All of our transceivers comply with Multi-Source Agreement (MSA) standards to provide seamless network integration. Additional product features include Digital Optical Monitoring (DOM) support which allows access to real-time operating parameters. This transceiver is Trade Agreements Act (TAA) compliant. We stand behind the quality of our products and proudly offer a limited lifetime warranty.

ProLabs' transceivers are RoHS compliant and lead-free.

TAA refers to the Trade Agreements Act (19 U.S.C. & 2501-2581), which is intended to foster fair and open international trade. TAA requires that the U.S. Government may acquire only "U.S.-made or designated country end products.")

Rev. 012026

Wavelength Guide

Channel #	Center Wavelength (nm)	Channel #	Center Wavelength (nm)
18	1563.05	**40**	1545.32
19	1562.23	**41**	1544.53
20	1561.42	**42**	1543.73
21	1560.61	**43**	1542.94
22	1559.79	**44**	1542.14
23	1558.98	**45**	1541.35
24	1558.17	**46**	1540.56
25	1557.36	**47**	1539.77
26	1556.55	**48**	1538.98
27	1555.75	**49**	1538.19
28	1554.94	**50**	1537.40
29	1554.13	**51**	1536.61
30	1553.33	**52**	1535.82
31	1552.52	**53**	1535.04
32	1551.72	**54**	1534.25
33	1550.92	**55**	1533.47
34	1550.12	**56**	1532.68
35	1549.32	**57**	1531.90
36	1548.51	**58**	1531.12
37	1547.72	**59**	1530.33
38	1546.92	**60**	1529.55
39	1546.12	**61**	1528.77

Absolute Maximum Ratings

Parameter	Symbol	Min.	Typ.	Max.	Unit	Notes
Storage Temperature	Tstg	-40		85	°C	
Operating Temperature	Tc	0		70	°C	
Supply Current	Icc		450	500	mA	1
Data Rate	DR	1.2	10.3125	11.3	Gbps	2
Maximum Supply Voltage	Vcc	-0.5		4.0	V	1
Bit Error Rate	BER			10^{-12}		

Notes:

1. For electrical power interface.
2. IEEE 802.3ae.

Electrical Characteristics

Parameter	Symbol	Min.	Typ.	Max.	Unit	Notes
Power Supply Voltage	Vcc	3.14	3.3	3.46	V	
Transmitter						
Input Differential Impedance	RIN		100			
Differential Data Input Swing	VIN,pp	300		850	mV	
Transmit Disable Voltage	VD	2		Vcc	V	
Transmit Enable Voltage	VEN	Vee		Vee+0.8	V	
Receiver						
Differential Data Output Swing	VOUT,pp	300		850	mV	
Data Output Rise/Fall Time (20-80%)	Tr/Tf	28			ps	
LOS Fault	Vlosa	2		Host_Vcc	V	
LOS Normal	Vlosd	Vee		Vee+0.5	V	

Optical Characteristics

Parameter	Symbol	Min.	Typ.	Max.	Unit	Notes
Transmitter						
Output Optical Power	Ptx	0		4	dBm	1
Optical Center Wavelength	λC	λC-0.05	λC	λC+0.05		2
Extinction Ratio	ER	9			dB	
Spectral Width (-20dB)	Δλ			0.6	nm	
Side Mode Suppression Ratio	SMSR	30			dB	
Relative Intensity Noise	RIN			-128	dB/Hz	
Transmitter Dispersion Penalty	TDP			3.2	dB	
Launch Power of Off Transmitter	Poff			-30	dBm	1
Receiver						
Optical Center Wavelength	λC	1260		1620	nm	
Average Receive Power	Prx	-24		-7	dBm	
Receiver Sensitivity @10.3Gbps	S			-24	dBm	3
Receiver Reflectance	RR			-27	dB	
LOS Assert	LOSA	-35			dBm	
LOS De-Assert	LOSD			-27	dBm	
LOS Hysteresis	LOSH	0.5			dB	

Notes:

1. Average.
2. λ = specified ITU grid wavelength.
3. Measured with the PRBS 2^{31}-1 test mode and BER<10^{-12}.

Pin Descriptions

Pin	Symbol	Name/Description	Notes
1	VeeT	Transmitter Ground. Common with Receiver Ground.	1
2	Tx_Fault	Transmitter Fault.	
3	Tx_Disable	Transmitter Disable. Laser output disables on “high” or “open.”	2
4	SDA	2-Wire Serial ID Interface Data Line.	3
5	SCL	2-Wire Serial ID Interface Clock Line.	3
6	MOD_ABS	Module Absent. Grounded within the module.	3
7	RSO	Rate Select 0. Not used.	
8	LOS	Loss of Signal Indication. "Logic 0" indicates normal operation.	4
9	RS1	Rate Select 1. Not used.	1
10	VeeR	Receiver Signal Ground. Common with Transmitter Ground.	1
11	VeeR	Receiver Signal Ground. Common with Transmitter Ground.	1
12	RD-	Inverse Received Data Out. AC Coupled.	
13	RD+	Non-Inverted Receiver Data Out. AC Coupled.	
14	VeeR	Receiver Signal Ground. Common with Transmitter Ground.	1
15	VccR	Receiver Power Supply.	
16	VccT	Transmitter Power Supply.	
17	VeeT	Transmitter Signal Ground. Common with Receiver Ground.	1
18	TD+	Transmitter Non-Inverted Data In. AC Coupled.	
19	TD-	Transmitter Inverted Data In. AC Coupled.	
20	VeeT	Transmitter Signal Ground.	1

Notes:

1. Circuit ground is isolated from the chassis ground.
2. Disabled: Tdis>2V or open. Enabled: Tdis<0.8V.
3. Should be pulled up with 4.7kΩ to 10kΩ on the host board to a voltage between 2V and 3.46V.
4. LOS is open collector output.

Block Diagram of Transceiver

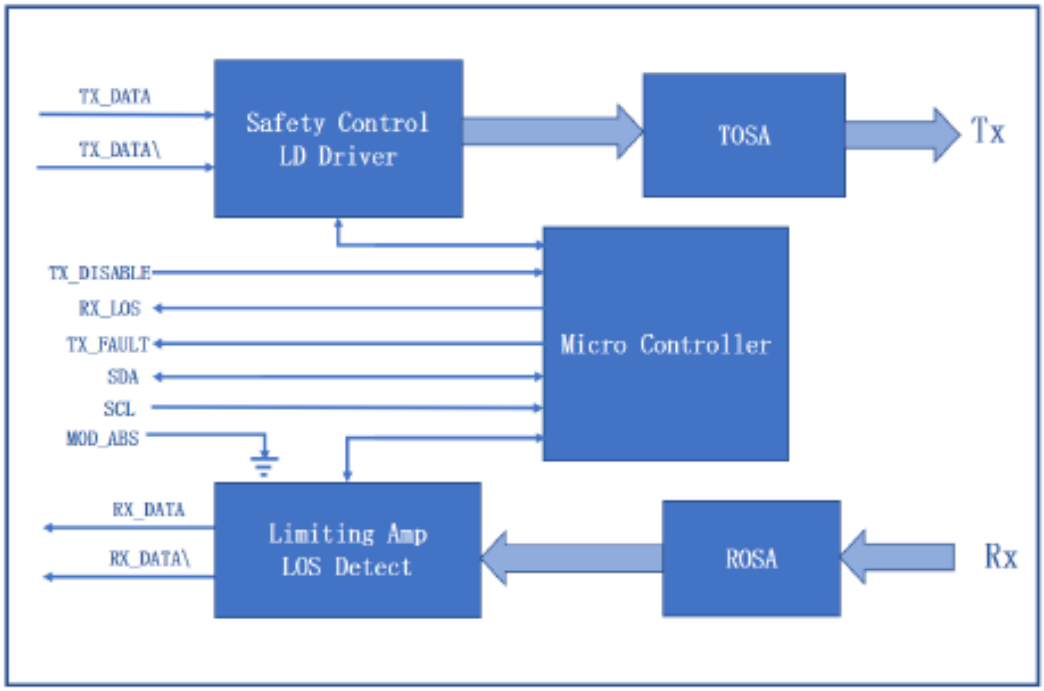

Electrical Pad Layout

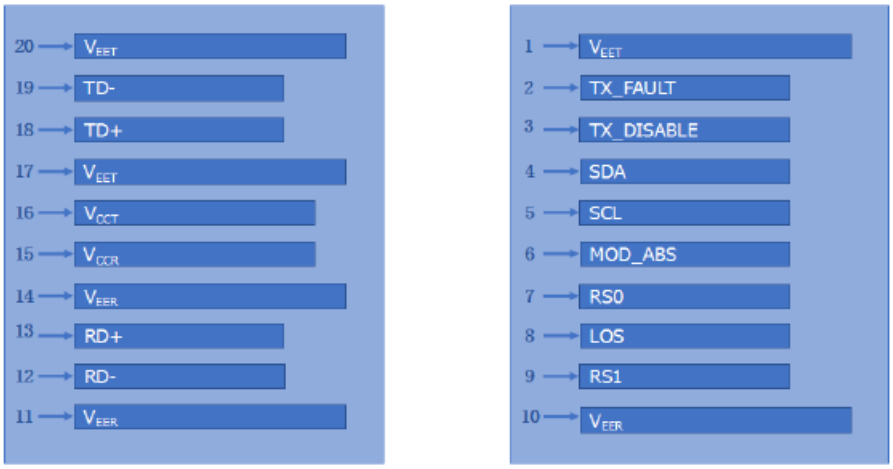

Top of Board

Bottom of Board

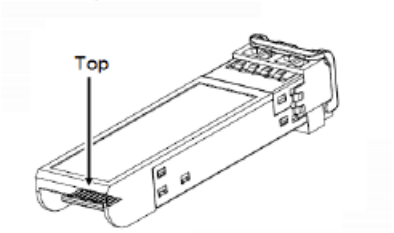

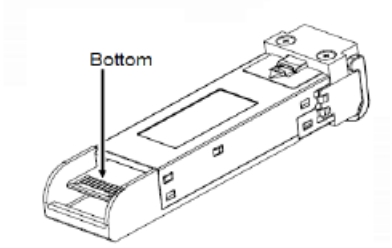

Mechanical Specifications

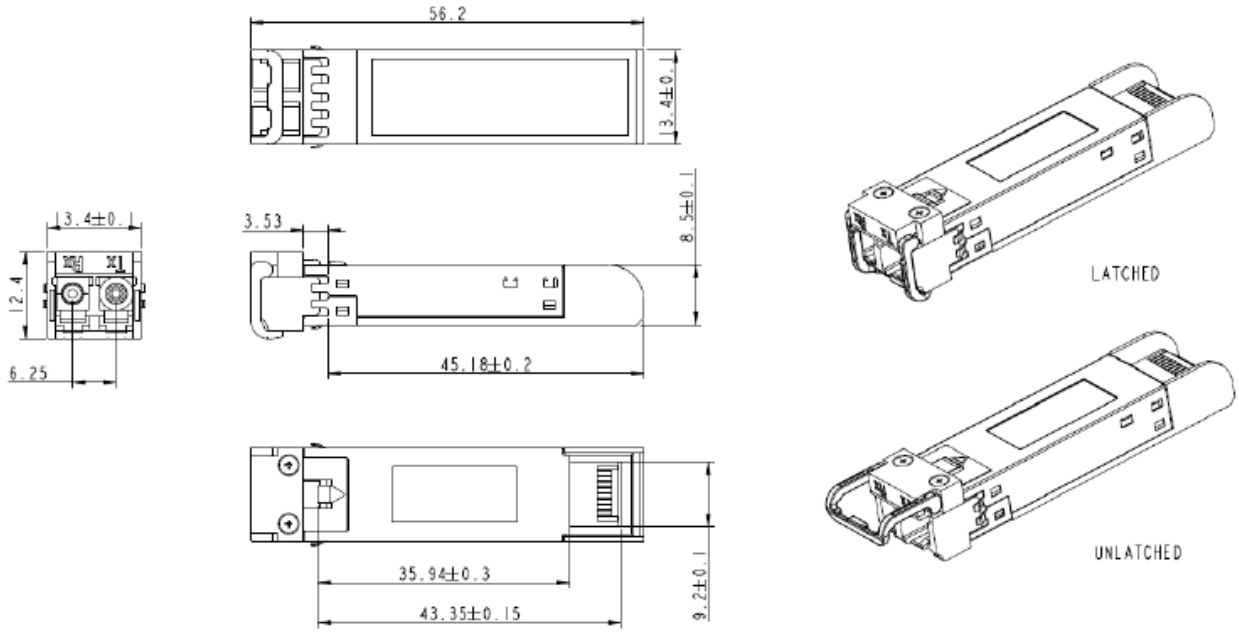

About ProLabs

Our extensive experience comes as standard. For over 20 years ProLabs has delivered optical connectivity solutions that give our customers freedom and choice through our ability to provide seamless interoperability. At the heart of our company is the ability to provide state-of-the-art optical transport and connectivity solutions that are compatible with more than 100 optical switching and transport platforms.

A Complete Portfolio of Network Solutions

ProLabs is focused on innovations in optical transport and connectivity. The combination of our knowledge of optics and networking equipment enables ProLabs to be your single source for optical transport and connectivity solutions from 100Mb to 1.6T while providing innovative solutions that increase network efficiency. We provide the optical connectivity expertise that is compatible with and enhances your switching and transport equipment.

The Trusted Partner

Customer service is our number one value. ProLabs has invested in people, labs and manufacturing capacity to ensure compatible products, and immediate answers to your questions. With Engineering and Manufacturing offices in the U.K. and U.S. augmented by field offices throughout the U.S., U.K. and Asia, ProLabs is able to be our customers best advocate 24 hours a day.

Contact Information

ProLabs US

Email: sales@prolabs.com
Telephone: 952-852-0252

ProLabs UK

Email: salessupport@prolabs.com
Telephone: +44 1285 719 600