SFP-10GBASE-T-80M-AR-C

Arista Networks® Compatible TAA 10GBase-TX SFP+ Transceiver (Copper, 80m, RJ-45)

Features:

- SFF-8432 and SFF-8431 MSA Compliant
- RJ-45 Connector
- Copper Media Type
- Commercial Temperature 0 to 70 Celsius
- Support Hot Pluggable
- Metal with lower EMI
- Excellent ESD protection
- RoHS compliant and Lead Free

Applications:

- 10GBase Copper

Product Description

This Arista Networks® compatible SFP+ transceiver provides 10GBase-TX throughput up to 80m over a copper connection via a RJ-45 connector. This TX module supports 10GBase and can be configured to fit your needs. It is guaranteed to be 100% compatible with the equivalent Arista Networks® transceiver. This easy to install, hot swappable transceiver has been programmed, uniquely serialized and data-traffic and application tested to ensure that it will initialize and perform identically. It is built to meet or exceed the specifications of Alcatel-Lucent Nokia®, as well as to comply with MSA (Multi-Source Agreement) standards to ensure seamless network integration. This transceiver is Trade Agreements Act (TAA) compliant. We stand behind the quality of our products and proudly offer a limited lifetime warranty.

ProLabs' transceivers are RoHS compliant and lead-free.

TAA refers to the Trade Agreements Act (19 U.S.C. & 2501-2581), which is intended to foster fair and open international trade. TAA requires that the U.S. Government may acquire only "U.S.-made or designated country end products.")

Rev. 012026

Absolute Maximum Ratings

Parameter	Symbol	Min.	Typ.	Max.	Unit	Notes
Data Rate	BR		10		GB/s	1
Bit Error Rate	BER			10^{-12}		
Storage Temperature	Tstg	-40		85	°C	2
Operating Case Temperature	Tc	0		70	°C	
Maximum Voltage	Vcc	-0.5		4	V	

Notes:

1. IEEE 802.3ae.
2. Ambient temperature.

Electrical Characteristics

Parameter	Symbol	Min.	Typ.	Max.	Unit	Notes
Input Voltage	V_{CC}	3.14	3.3	3.46	V	
Supply Current	Icc		590		mA	1
Surge Current	Isurge			30	mA	

Notes:

1. Test at 10Gbps rate using 80m CAT 6A cable.

Pin Descriptions

Pin	Symbol	Description	Ref.
1	VeeT	Transmitter Ground (Common with Receiver Ground).	1
2	TX_Fault	Transmitter Fault. Not supported.	
3	TX_Disable	Transmitter Disable, PHY disabled on high or open.	2
4	SDA	2-Wire Serial Interface Data.	3
5	SCL	2-Wire Serial Interface Clock.	3
6	MOD_ABS	Module Absent. Grounded within the module.	3
7	RS0	No Connection Required.	
8	LOS	Loss of Signal Indication, Logic 0 indicated normal operation.	
9	RS1	No Connection Required.	
10	VeeR	Receiver Ground (Common with Transmitter Ground).	1
11	VeeR	Receiver Ground (Common with Transmitter Ground).	1
12	RD-	Receiver Inverted DATA out. AC coupled.	
13	RD+	Receiver Non-Inverted Data Out. AC coupled.	
14	VeeR	Receiver Ground (Common with Receiver Ground).	1
15	VccR	Receiver Power Supply.	
16	VccT	Transmitter Power Supply.	
17	Veet	Transmitter ground (Common with Receiver Ground).	1
18	TD+	Transmitter Non-Inverted Data In. AC coupled.	
19	TD-	Transmitter Inverted Data In. AC Coupled.	
20	Veet	Transmitter Ground (Common with Receiver Ground).	1

Notes:

1. Circuit ground is connected to chassis ground.
2. Disabled T_{DIS}>2Vor open, Enabled T_{DIS}<0.8V
3. Should be pulled up with 4.7KΩ-10KΩ on host board to a voltage between 2V and 3.6V

Electrical Pad Layout

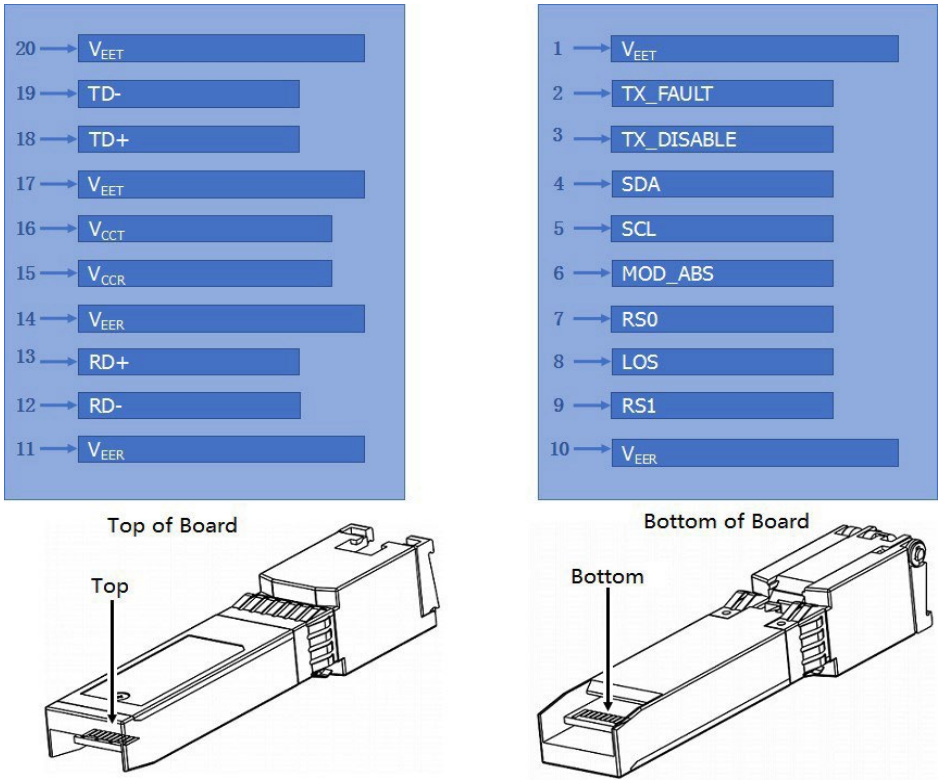

Mechanical Specifications

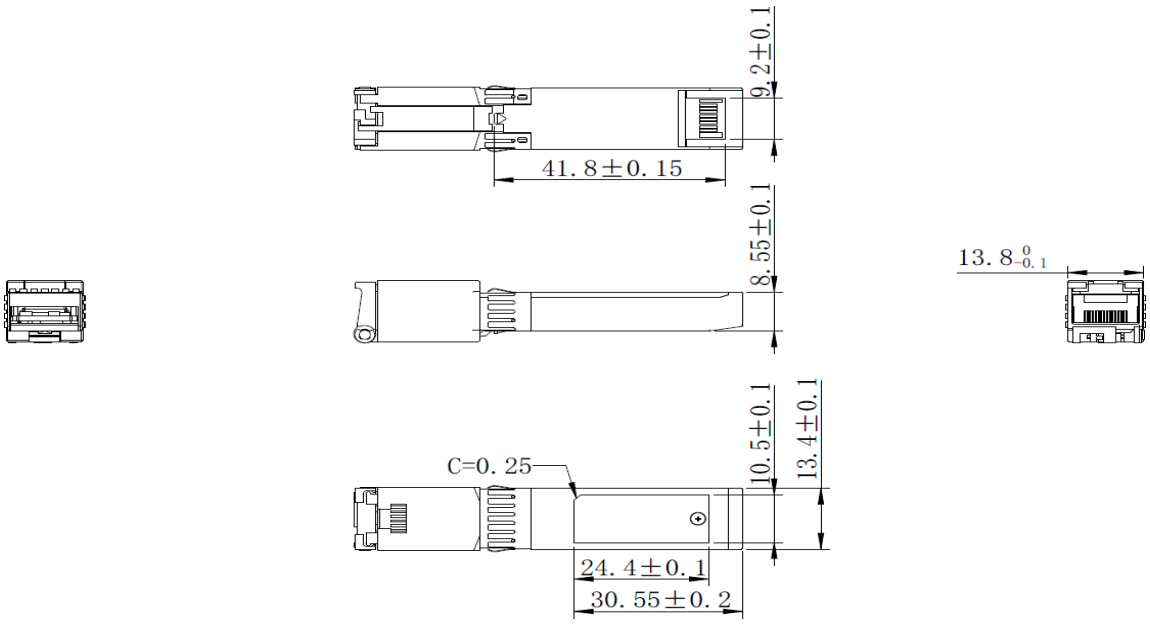

About ProLabs

Our extensive experience comes as standard. For over 20 years ProLabs has delivered optical connectivity solutions that give our customers freedom and choice through our ability to provide seamless interoperability. At the heart of our company is the ability to provide state-of-the-art optical transport and connectivity solutions that are compatible with more than 100 optical switching and transport platforms.

A Complete Portfolio of Network Solutions

ProLabs is focused on innovations in optical transport and connectivity. The combination of our knowledge of optics and networking equipment enables ProLabs to be your single source for optical transport and connectivity solutions from 100Mb to 1.6T while providing innovative solutions that increase network efficiency. We provide the optical connectivity expertise that is compatible with and enhances your switching and transport equipment.

The Trusted Partner

Customer service is our number one value. ProLabs has invested in people, labs and manufacturing capacity to ensure compatible products, and immediate answers to your questions. With Engineering and Manufacturing offices in the U.K. and U.S. augmented by field offices throughout the U.S., U.K. and Asia, ProLabs is able to be our customers best advocate 24 hours a day.

Contact Information

ProLabs US

Email: sales@prolabs.com
Telephone: 952-852-0252

ProLabs UK

Email: salessupport@prolabs.com
Telephone: +44 1285 719 600