A-Q200-Q200-25M-AO

Arista Networks® A-Q200-Q200-25M Compatible TAA Compliant 200GBase-AOC QSFP56 Active Optical Cable (850nm, MMF, 25m)

Features:

- 4 independent parallel optical channels
- Hot Pluggable
- Each channel data rate up to 26.56GBaud
- CML Compatible electrical I/O
- Operating Temperature Range: 0 to 70 Celsius
- OM3 Multi-mode
- RoHS Compliant and lead-free
- Color: Aqua

Applications:

- 200GBase Ethernet

Product Description

This is a Arista Networks® MFS1S00-H025V compatible 200GBase-AOC QSFP56 to QSFP56 DSP active optical cable that operates over active fiber with a maximum reach of 25.0m (82.0ft). At a wavelength of 850nm, it has been programmed, uniquely serialized, and data-traffic and application tested to ensure it is 100% compliant and functional. This active optical cable is TAA (Trade Agreements Act) compliant, and is built to comply with MSA (Multi-Source Agreement) standards. We stand behind the quality of our products and proudly offer a limited lifetime warranty.

AddOn's transceivers are RoHS compliant and lead-free.

TAA refers to the Trade Agreements Act (19 U.S.C. & 2501-2581), which is intended to foster fair and open international trade. TAA requires that the U.S. Government may acquire only "U.S.-made or designated country end products."

Rev. 081126

General Specifications

Parameter	Symbol	Min.	Typ.	Max.	Unit
Storage Temperature	Tstg	-40		85	°C
Operating Case Temperature	Tc	0	25	70	°C
Supply Voltage	Vcc	0		3.6	V
Relative Operating Humidity	RH	5		85	%
Relative Storage Humidity	RH	0		95	%

Notes:

1. Exceeding the Absolute Maximum Ratings may cause irreversible damage to the device. The device is not intended to be operated under the condition of simultaneous Absolute Maximum Ratings, a condition which may cause irreversible damage to the device. RH is a non-condensing condition.

Electrical Characteristics

Parameter	Symbol	Min.	Typ.	Max.	Unit	Notes
Power Supply Voltage	Vcc	3.14	3.3	3.46	V	
Single Module Supply Current	IIN		1150	1350	mA	
Signaling Speed Per Channel	S		26.56		GBaud	
Transmitter						
Tx_Data Differential Input Voltage	VIN	300		900	mV	
Tx_Data Differential Input Impedance	ZIN		100		Ω	
Receiver						
Rx_Data Differential Output Voltage	VOUT			900	mV	
Rx_Data Differential Output Impedance	ZOUT	90	100	110	Ω	
Link BER	BER			$5E^{-5}$		1

Notes:

1. @26.56GBaud PRBS31Q.

Cable Specifications

Parameter	Value
Minimum Bend Radius (mm)	30
Cable Diameter (mm)	3.0 ± 0.15
Cable Tolerance	+0.2/-0

Pin Descriptions

Pin	Symbol	Name/Description	Notes
1	GND	Module Ground.	
2	Tx2-	Transmitter Inverted Data Input.	
3	Tx2+	Transmitter Non-Inverted Data Input.	
4	GND	Module Ground.	
5	Tx4-	Transmitter Inverted Data Input.	
6	Tx4+	Transmitter Non-Inverted Data Input.	
7	GND	Module Ground.	
8	ModselL	Module Select.	
9	ResetL	Module Reset.	
10	VccRx	Receiver +3.3V DC Power Supply.	
11	SCL	I2C Serial Clock.	
12	SDA	I2C Serial Data.	
13	GND	Module Ground.	
14	Rx3+	Receiver Non-Inverted Differential Output.	
15	Rx3-	Receiver Inverted Differential Output.	
16	GND	Module Ground.	
17	Rx1+	Receiver Non-Inverted Differential Output	
18	Rx1-	Receiver Inverted Differential Output	
19	GND	Module Ground.	
20	GND	Module Ground.	
21	Rx2-	Receiver Inverted Differential Output.	
22	Rx2+	Receiver Non-Inverted Differential Output.	
23	GND	Module Ground.	
24	Rx4-	Receiver Inverted Differential Output.	
25	Rx4+	Receiver Non-Inverted Differential Output.	
26	GND	Module Ground.	
27	ModPrsL	Module Present.	
28	IntL	Interrupt.	
29	VccTx	Transmitter +3.3V DC Power Supply.	
30	Vcc1	+3.3V DC Power Supply.	
31	LPMode	Low-Power Mode.	
32	GND	Module Ground.	
33	Tx3+	Transmitter Non-Inverted Data Input.	
34	Tx3-	Transmitter Inverted Data Input.	
35	GND	Module Ground.	

36	Tx1+	Transmitter Non-Inverted Data Input.	
37	Tx1-	Transmitter Inverted Data Input.	
38	GND	Module Ground.	

Pin Assignment

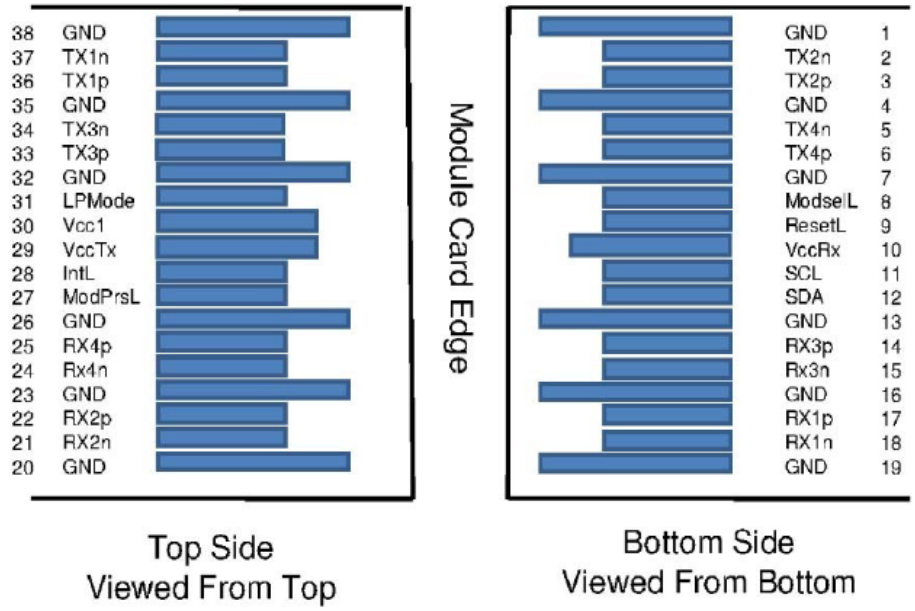

Block Diagram

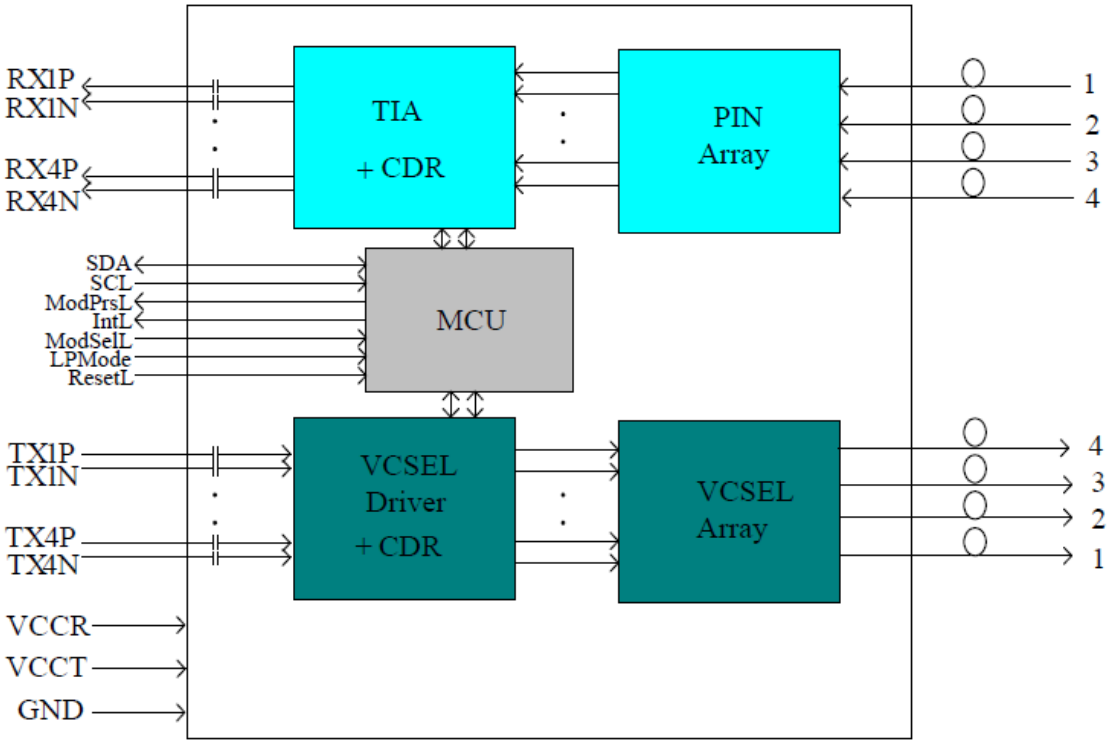

Electrical Interface

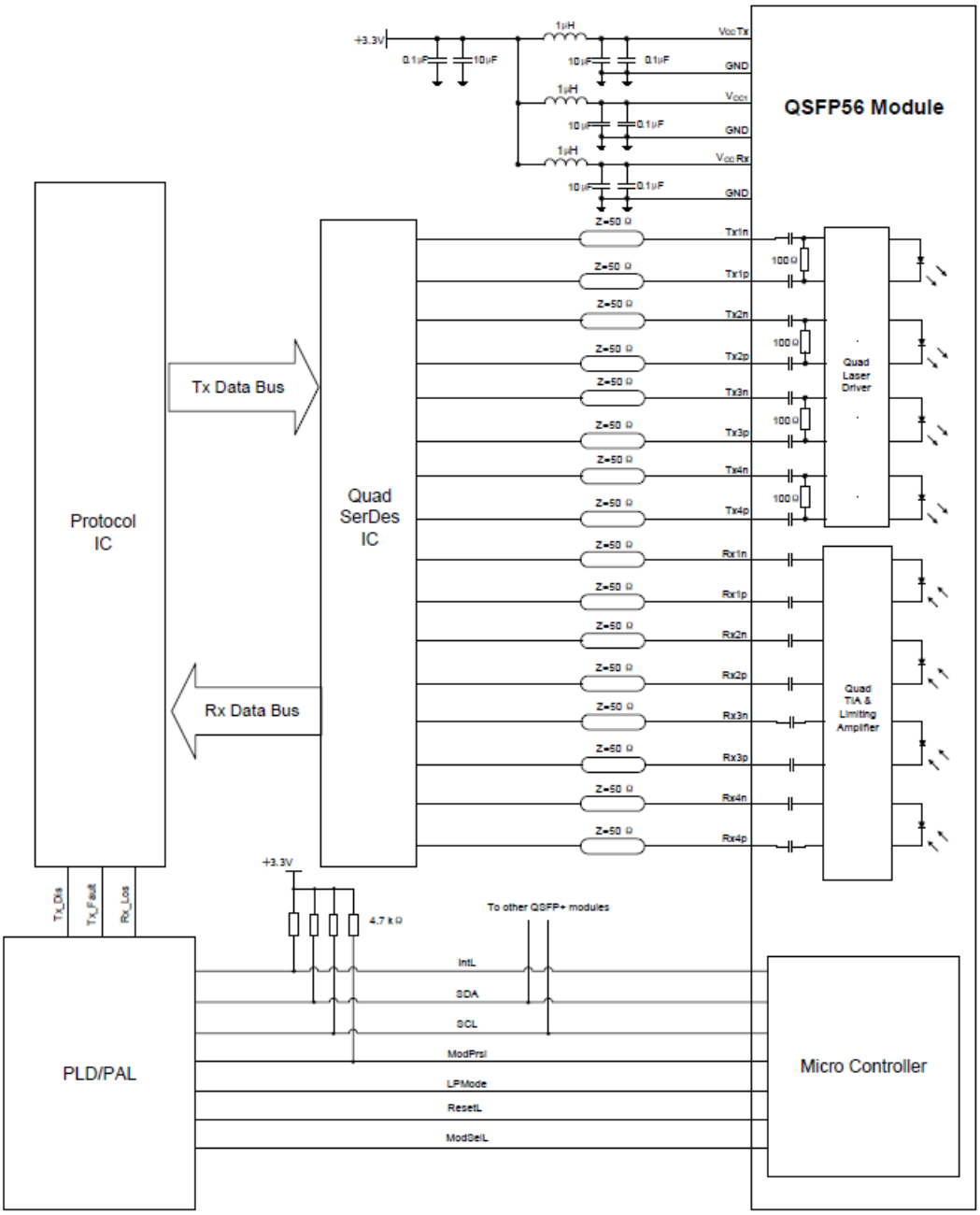

Mechanical Specifications

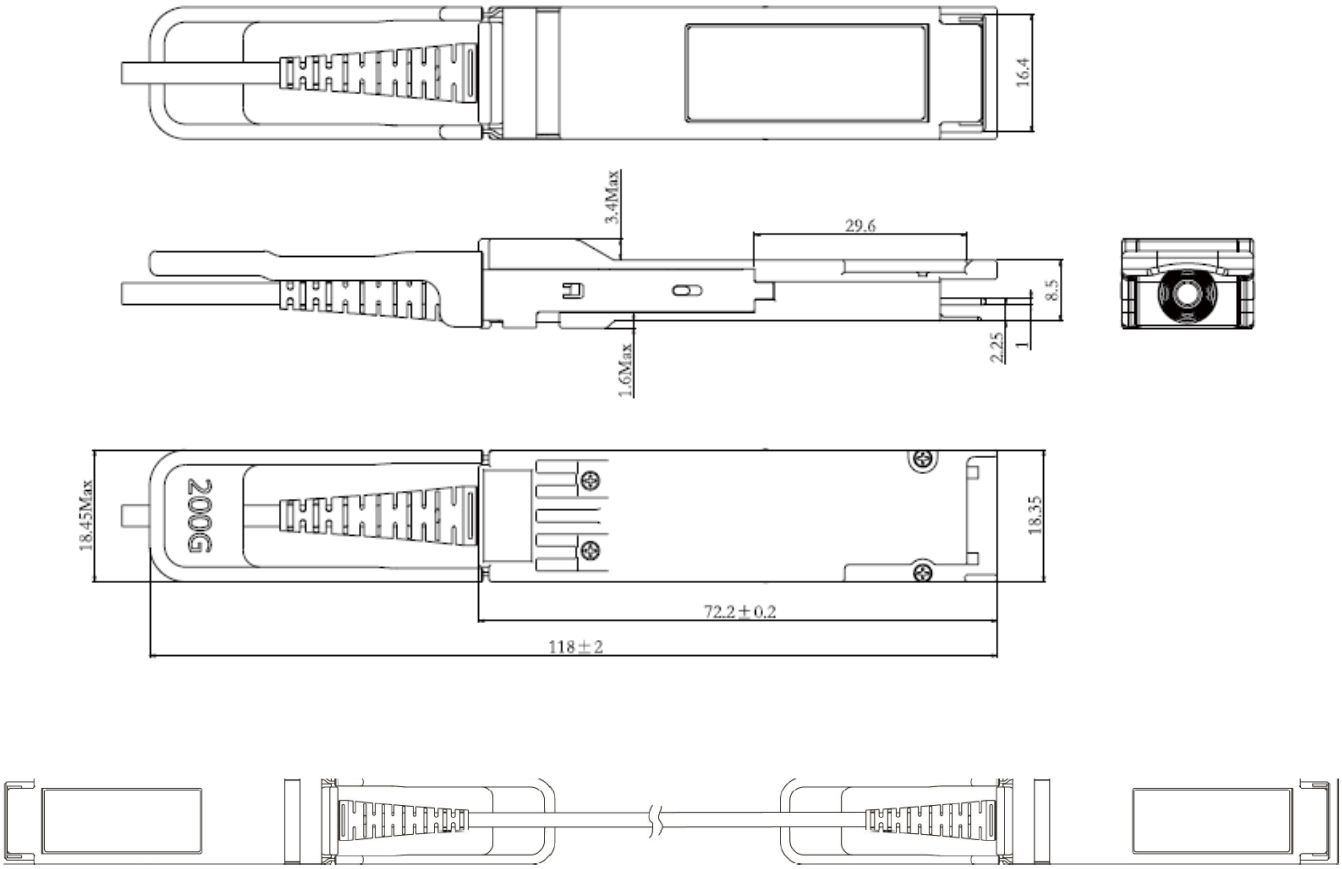

Notes:

1. Tolerance ±0.1mm.
2. Others according with SFF-8661 MSA or Customer Spec.

About AddOn Networks

In 1999, AddOn Networks entered the market with a single product. Our founders fulfilled a severe shortage for compatible, cost-effective optical transceivers that compete at the same performance levels as leading OEM manufacturers. Adhering to the idea of redefining service and product quality not previously had in the fiber optic networking industry, AddOn invested resources in solution design, production, fulfillment, and global support.

Combining one of the most extensive and stringent testing processes in the industry, an exceptional free tech support center, and a consistent roll-out of innovative technologies, AddOn has continually set industry standards of quality and reliability throughout its history.

Reliability is the cornerstone of any optical fiber network and is ingrained in AddOn's DNA. It has played a key role in nurturing the long-term relationships developed over the years with customers. AddOn remains committed to exceeding industry standards with certifications ranging from NEBS Level 3 to ISO 9001:2015 with every new development while maintaining the signature reliability of its products.

U.S. Headquarters

Email: sales@addonnetworks.com

Telephone: +1 877.292.1701

Fax: 949.266.9273

Europe Headquarters

Email: salesemea@addonnetworks.com

Telephone: +44 1285 842070