**SFP-10G-DZ-33.47-C**

Arista Networks® SFP-10G-DZ-33.47 Compatible TAA 10GBase-DWDM SFP+ Transceiver C-Band 100GHz (SMF, 1533.47nm, 80km, LC, DOM)

**Features:**

- SFF-8432 and SFF-8472 Compliance
- Duplex LC Connector
- Temperature-stabilized EML transmitter and APD receiver
- Single-mode Fiber
- Commercial Temperature 0 to 70 Celsius
- Hot Pluggable
- Metal with Lower EMI
- Excellent ESD Protection
- RoHS Compliant and Lead Free

**Applications:**

- 10x Gigabit Ethernet over DWDM
- 8x/10x Fibre Channel
- Access, Metro and Enterprise

**Product Description**

This Arista Networks® SFP-10G-DZ-33.47 compatible SFP+ transceiver provides 10GBase-DWDM throughput up to 80km over single-mode fiber (SMF) using a wavelength of 1533.47nm via an LC connector. It can operate at temperatures between 0 and 70C. Our transceiver is built to meet or exceed OEM specifications and is guaranteed to be 100% compatible with Arista Networks®. It has been programmed, uniquely serialized, and tested for data-traffic and application to ensure that it will initialize and perform identically. All of our transceivers comply with Multi-Source Agreement (MSA) standards to provide seamless network integration. Additional product features include Digital Optical Monitoring (DOM) support which allows access to real-time operating parameters. This transceiver is Trade Agreements Act (TAA) compliant. We stand behind the quality of our products and proudly offer a limited lifetime warranty.

ProLabs' transceivers are RoHS compliant and lead-free.

TAA refers to the Trade Agreements Act (19 U.S.C. & 2501-2581), which is intended to foster fair and open international trade. TAA requires that the U.S. Government may acquire only "U.S.-made or designated country end products.")

**Rev. 012026**

## Wavelength Guide (100GHz ITU-T Channel)

| ITU Channel # | Frequency (THZ) | Center Wavelength (nm) |
|---|---|---|
| **61** | 196.1 | 1528.77 |
| **60** | 196.0 | 1529.55 |
| **59** | 195.9 | 1530.33 |
| **58** | 195.8 | 1531.12 |
| **57** | 195.7 | 1531.90 |
| **56** | 195.6 | 1532.68 |
| **55** | 195.5 | 1533.47 |
| **54** | 195.4 | 1534.25 |
| **53** | 195.3 | 1535.04 |
| **52** | 195.2 | 1535.82 |
| **51** | 195.1 | 1536.61 |
| **50** | 195.0 | 1537.40 |
| **49** | 194.9 | 1538.19 |
| **48** | 194.8 | 1538.98 |
| **47** | 194.7 | 1539.77 |
| **46** | 194.6 | 1540.56 |
| **45** | 194.5 | 1541.35 |
| **44** | 194.4 | 1542.14 |
| **43** | 194.3 | 1542.94 |
| **42** | 194.2 | 1543.73 |
| **41** | 194.1 | 1544.53 |
| **40** | 194.0 | 1545.32 |
| **39** | 193.9 | 1546.12 |
| **38** | 193.8 | 1546.92 |
| **37** | 193.7 | 1547.72 |
| **36** | 193.6 | 1548.51 |
| **35** | 193.5 | 1549.32 |
| **34** | 193.4 | 1550.12 |
| **33** | 193.3 | 1550.92 |
| **32** | 193.2 | 1551.72 |
| **31** | 193.1 | 1552.52 |
| **30** | 193.0 | 1553.33 |
| **29** | 192.9 | 1554.13 |
| **28** | 192.8 | 1554.94 |
| **27** | 192.7 | 1555.75 |
| **26** | 192.6 | 1556.55 |
| **25** | 192.5 | 1557.36 |
| **24** | 192.4 | 1558.17 |
| **23** | 192.3 | 1558.98 |
| **22** | 192.2 | 1559.79 |
| **21** | 192.1 | 1560.61 |
| **20** | 192.0 | 1561.42 |

| | | |
|---|---|---|
| **19** | 191.9 | 1562.23 |
| **18** | 191.8 | 1563.05 |
| **17** | 191.7 | 1563.86 |

### Absolute Maximum Ratings

| Parameter | Symbol | Min. | Typ. | Max. | Unit | Notes |
|---|---|---|---|---|---|---|
| **Maximum Supply Voltage** | Vcc | 0.5 | | 4.0 | V | |
| **Storage Temperature** | Tstg | -40 | | +85 | °C | 1 |
| **Operating Case Temperature** | Tc | 0 | | 70 | °C | |
| **Data Rate** | BR | 1.2 | 10.3125 | 11.3 | Gbps | 2 |
| **Bit Error Rate** | BER | | | $10^{-12}$ | | |
| **Supply Current** | Icc | | 450 | 500 | mA | 3 |

**Notes:**

1. Ambient temperature.
2. IEEE 802.3ae.
3. For electrical power interface.

### Electrical Characteristics Vcc=3.4 to 3.46V, Tc

| Parameter | Symbol | Min. | Typ. | Max. | Unit | Notes |
|---|---|---|---|---|---|---|
| **Input Voltage** | Vcc | 3.14 | 3.3 | 3.46 | V | |
| **Power Consumption** | $P_D$ | | | 1.5 | W | |
| **Transmitter** | | | | | | |
| **Differential Input Impedance** | ZIN | | 100 | | Ω | |
| **Differential Data Input Swing** | VIN,pp | 300 | | 850 | mV | |
| **Transmit Enable voltage** | $V_D$ | 2 | | Vcc | V | |
| **Transmit Enable voltage** | $V_{EN}$ | VeeT | | VeeT + 0.8 | V | |
| **Receiver** | | | | | | |
| **Differential Data Output Swing** | VOUT_pp | 300 | | 850 | mV | |
| **Data Output Rise/Fall Time (20%-80%)** | Tr/Tf | 28 | | | ps | |
| **LOS Asserted** | LOSA | 2 | | Host_Vcc | V | |
| **LOS De-Asserted** | LOSD | VeeR | | VeeR+ 0.5 | V | |

**Notes:**

1. For electrical power interface.

## Optical Characteristics

| Parameter | Symbol | Min | Typ. | Max | Unit | Notes |
|---|---|---|---|---|---|---|
| **Transmitter** | | | | | | |
| **Optical Power** | PTX | 0 | | 4 | dBm | 1 |
| **Optical Wavelength** | λ | λ-0.1 | λ | λ+0.1 | nm | 2 |
| **Extinction Ratio** | ER | 9 | | | dB | |
| **Spectral Width (-20dB)** | Δλ | | | 0.6 | nm | |
| **Side Mode Suppression Ratio** | SMSR | 30 | | | dB | |
| **Relative Intensity Noise** | RIN | | | -128 | dB/Hz | |
| **Transmitter Dispersion Penalty** | TDP | | | 3.2 | dB | |
| **Launch Power of OFF Transmitter** | Poff | | | -30 | dBm | 1 |
| **Receiver** | | | | | | |
| **Optical Center Wavelength** | λc | 1260 | | 1620 | nm | |
| **Average Receive Power** | $P_{RX}$ | -24 | | -7 | dBm | |
| **Receiver Sensitivity @ 10.3 GBps** | PX_SEN | | | -24 | dBm | 3 |
| **Receiver Reflectance** | $TR_{RX}$ | | | -27 | dB | |
| **LOS Assert** | LOSA | -35 | | | dB | |
| **LOS De-assert** | LOSD | | | -27 | dB | |
| **LOS Hysteresis** | LOSH | 0.5 | | | dB | |

**Notes:**

1. Average.
2. λ = specified ITU Grid wavelength.
3. Measured with PRBS $2^{31}$-1 test mode, BER<$10^{-12}$.

**Pin Descriptions**

| Pin | Symbol | Name/Descriptions | Ref. |
|---|---|---|---|
| **1** | VeeT | Transmitter Ground (Common with Receiver Ground). | 1 |
| **2** | TX_Fault | Transmitter Fault. | |
| **3** | TX_Disable | Transmitter Disable. Laser output disabled on “high” or “open.” | 2 |
| **4** | SDA | 2-Wire Serial Interface Data. | 3 |
| **5** | SCL | 2-Wire Serial Interface Clock. | 3 |
| **6** | MOD_ABS | Module Absent. Grounded within the module. | 3 |
| **7** | RS0 | Rate Select 0. Not used. | |
| **8** | LOS | Loss of Signal indication. “Logic 0” indicates normal operation. | 4 |
| **9** | RS1 | Rate Select 1. Not used. | 1 |
| **10** | VeeR | Receiver Ground (Common with Transmitter Ground). | 1 |
| **11** | VeeR | Receiver Ground (Common with Transmitter Ground). | 1 |
| **12** | RD- | Receiver Inverted Data out. AC Coupled. | |
| **13** | RD+ | Receiver Non-inverted DATA out. AC Coupled. | |
| **14** | VeeR | Receiver Ground (Common with Transmitter Ground). | 1 |
| **15** | VccR | Receiver Power Supply. | |
| **16** | VccT | Transmitter Power Supply. | |
| **17** | VeeT | Transmitter Ground (Common with Receiver Ground). | 1 |
| **18** | TD+ | Transmitter Non-Inverted Data In. AC Coupled. | |
| **19** | TD- | Transmitter Inverted Data In. AC Coupled. | |
| **20** | VeeT | Transmitter Ground (Common with Receiver Ground). | 1 |

**Notes:**

1. Circuit ground is isolated form chassis ground.
2. Disable TDIS>2Vor open. Enable TDIS<0.8V.
3. Should be pulled up with 4.7kΩ-10KΩ on host board to a voltage between 2V and 3.46V.
4. LOS is open collector output.

**Typical eye Diagram**

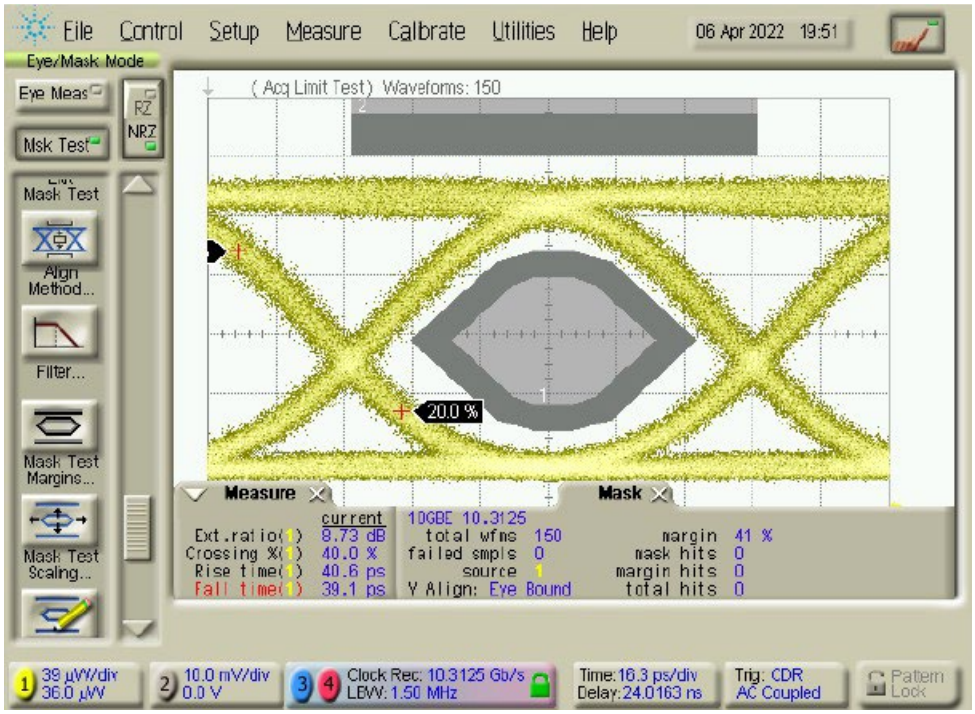


**Block Diagram**

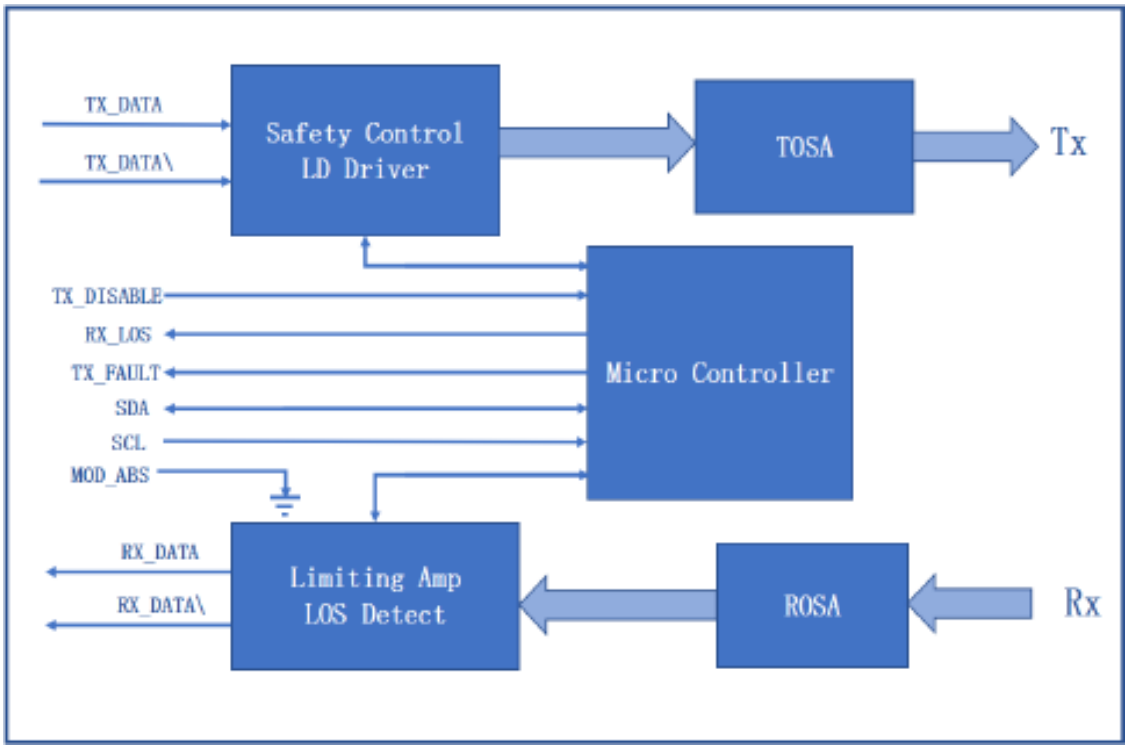

**Electrical Pad Layout**

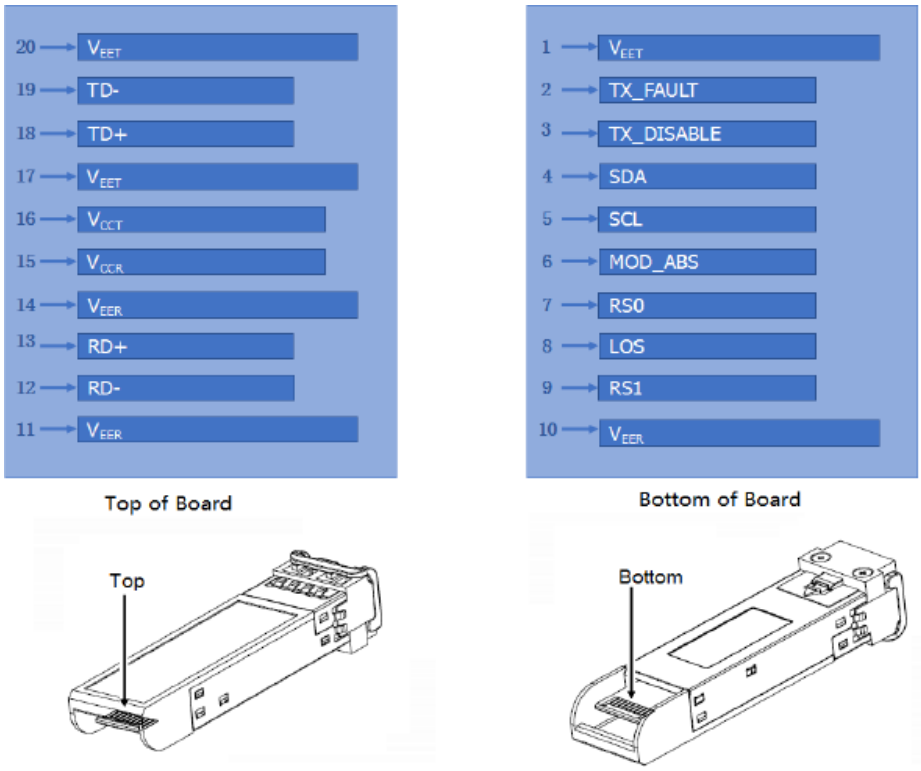


**Mechanical Specifications**

Module Weight: 16.5g

Dust Cap Weight: 0.95g

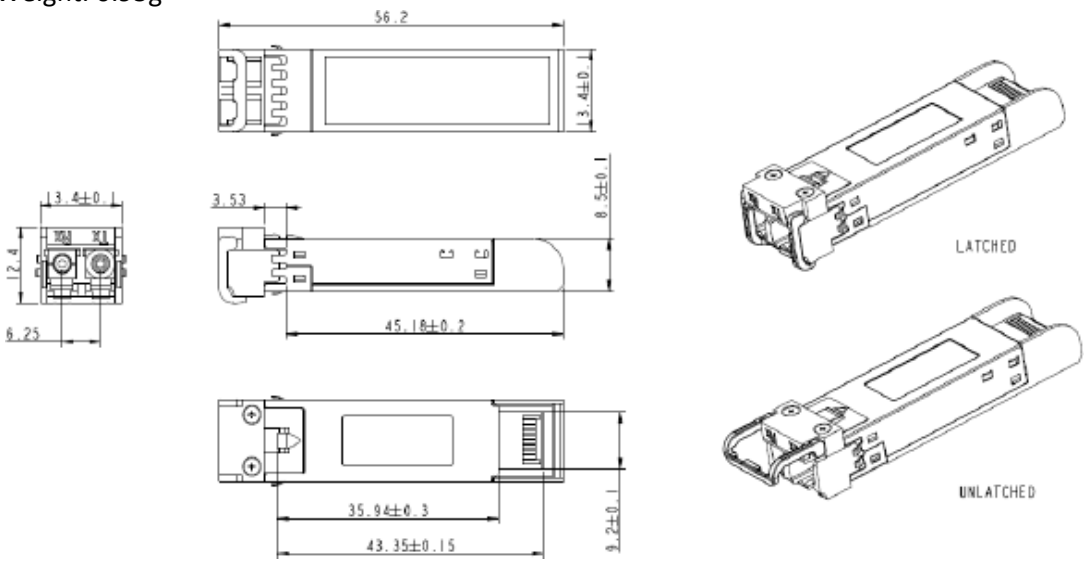


All Dimensions are ±0.2mm unless otherwise specified

**About ProLabs**

Our extensive experience comes as standard. For over 20 years ProLabs has delivered optical connectivity solutions that give our customers freedom and choice through our ability to provide seamless interoperability. At the heart of our company is the ability to provide state-of-the-art optical transport and connectivity solutions that are compatible with more than 100 optical switching and transport platforms.

**A Complete Portfolio of Network Solutions**

ProLabs is focused on innovations in optical transport and connectivity. The combination of our knowledge of optics and networking equipment enables ProLabs to be your single source for optical transport and connectivity solutions from 100Mb to 1.6T while providing innovative solutions that increase network efficiency. We provide the optical connectivity expertise that is compatible with and enhances your switching and transport equipment.

**The Trusted Partner**

Customer service is our number one value. ProLabs has invested in people, labs and manufacturing capacity to ensure compatible products, and immediate answers to your questions. With Engineering and Manufacturing offices in the U.K. and U.S. augmented by field offices throughout the U.S., U.K. and Asia, ProLabs is able to be our customers best advocate 24 hours a day.

**Contact Information**

ProLabs US

Email: sales@prolabs.com
Telephone: 952-852-0252

ProLabs UK

Email: salessupport@prolabs.com
Telephone: +44 1285 719 600