**SFP-10G-DZ-37.00-C**

Arista Networks® SFP-10G-DZ-37.00 Compatible TAA 10GBase-DWDM SFP+ Transceiver C-Band 50GHz (SMF, 1537.00nm, 80km, LC, DOM)

**Features:**

- SFF-8432 and SFF-8472 Compliance
- Duplex LC Connector
- Temperature-stabilized EML transmitter and APD receiver
- Single-mode Fiber
- Commercial Temperature 0 to 70 Celsius
- Hot Pluggable
- Metal with Lower EMI
- Excellent ESD Protection
- RoHS Compliant and Lead Free

**Applications:**

- 10x Gigabit Ethernet over DWDM
- 8x/10x Fibre Channel
- Access, Metro and Enterprise

**Product Description**

This Arista Networks® SFP-10G-DZ-37.00 compatible SFP+ transceiver provides 10GBase-DWDM throughput up to 80km over single-mode fiber (SMF) using a wavelength of 1537.00nm via an LC connector. It can operate at temperatures between 0 and 70C. Our transceiver is built to meet or exceed OEM specifications and is guaranteed to be 100% compatible with Arista Networks®. It has been programmed, uniquely serialized, and tested for data-traffic and application to ensure that it will initialize and perform identically. All of our transceivers comply with Multi-Source Agreement (MSA) standards to provide seamless network integration. Additional product features include Digital Optical Monitoring (DOM) support which allows access to real-time operating parameters. This transceiver is Trade Agreements Act (TAA) compliant. We stand behind the quality of our products and proudly offer a limited lifetime warranty.

ProLabs' transceivers are RoHS compliant and lead-free.

TAA refers to the Trade Agreements Act (19 U.S.C. & 2501-2581), which is intended to foster fair and open international trade. TAA requires that the U.S. Government may acquire only "U.S.-made or designated country end products.")

**Rev. 012026**

**Regulatory Compliance**

- ESD to the Electrical PINs: compatible with MIL-STD-883E Method 3015.7.
- ESD to the Duplex LC Receptacle: compatible with IEC 61000-4-2
- Immunity compatible with IEC 61000-4-3.
- EMI compatible with FCC Part 15 Class B EN55022 Class B (CISPR 22B) VCCI Class B.
- Laser Eye Safety compatible with FDA 21CFR 1040.10 and 1040.11 EN60950, EN (IEC) 60825-1,2.
- RoHs compliant with 2002/95/EC 4.1&4.2 2005/747/EC.

**Tunable SFP+ Channel Number and Wavelength**

| ITU Channel | Frequency (THz) | Center Wavelength (nm) | ITU Channel | Frequency (THz) | Center Wavelength (nm) |
|---|---|---|---|---|---|
| **1** | 191.10 | 1568.77 | 52 | 193.65 | 1548.11 |
| **2** | 191.15 | 1568.36 | 53 | 193.70 | 1547.72 |
| **3** | 191.20 | 1567.95 | 54 | 193.75 | 1547.32 |
| **4** | 191.25 | 1567.54 | 55 | 193.80 | 1546.92 |
| **5** | 191.30 | 1567.13 | 56 | 193.85 | 1546.52 |
| **6** | 191.35 | 1566.72 | 57 | 193.90 | 1546.12 |
| **7** | 191.40 | 1566.31 | 58 | 193.95 | 1545.72 |
| **8** | 191.45 | 1565.90 | 59 | 194.00 | 1545.32 |
| **9** | 191.50 | 1565.50 | 60 | 194.05 | 1544.92 |
| **10** | 191.55 | 1565.09 | 61 | 194.10 | 1544.53 |
| **11** | 191.60 | 1564.68 | 62 | 194.15 | 1544.13 |
| **12** | 191.65 | 1564.27 | 63 | 194.20 | 1543.73 |
| **13** | 191.70 | 1563.86 | 64 | 194.25 | 1543.33 |
| **14** | 191.75 | 1563.45 | 65 | 194.30 | 1542.94 |
| **15** | 191.80 | 1563.05 | 66 | 194.35 | 1542.54 |
| **16** | 191.85 | 1562.64 | 67 | 194.40 | 1542.14 |
| **17** | 191.90 | 1562.23 | 68 | 194.45 | 1541.75 |
| **18** | 191.95 | 1561.83 | 69 | 194.50 | 1541.35 |
| **19** | 192.00 | 1561.42 | 70 | 194.55 | 1540.95 |
| **20** | 192.05 | 1561.01 | 71 | 194.60 | 1540.56 |
| **21** | 192.10 | 1560.61 | 72 | 194.65 | 1540.16 |
| **22** | 192.15 | 1560.20 | 73 | 194.70 | 1539.77 |
| **23** | 192.20 | 1559.79 | 74 | 194.75 | 1539.37 |
| **24** | 192.25 | 1559.39 | 75 | 194.80 | 1538.98 |
| **25** | 192.30 | 1558.98 | 76 | 194.85 | 1538.58 |
| **26** | 192.35 | 1558.58 | 77 | 194.90 | 1538.19 |
| **27** | 192.40 | 1558.17 | 78 | 194.95 | 1537.79 |
| **28** | 192.45 | 1557.77 | 79 | 195.00 | 1537.40 |
| **29** | 192.50 | 1557.36 | 80 | 195.05 | 1537.00 |
| **30** | 192.55 | 1556.96 | 81 | 195.10 | 1536.61 |
| **31** | 192.60 | 1556.55 | 82 | 195.15 | 1536.22 |
| **32** | 192.65 | 1556.15 | 83 | 195.20 | 1535.82 |
| **33** | 192.70 | 1555.75 | 84 | 195.25 | 1535.43 |
| **34** | 192.75 | 1555.34 | 85 | 195.30 | 1535.04 |
| **35** | 192.80 | 1554.94 | 86 | 195.35 | 1534.64 |
| **36** | 192.85 | 1554.54 | 87 | 195.40 | 1534.25 |

| | | | | | |
|---|---|---|---|---|---|
| **37** | 192.90 | 1554.13 | 88 | 195.45 | 1533.86 |
| **38** | 192.95 | 1553.73 | 89 | 195.50 | 1533.47 |
| **39** | 193.00 | 1553.33 | 90 | 195.55 | 1533.07 |
| **40** | 193.05 | 1552.93 | 91 | 195.60 | 1532.68 |
| **41** | 193.10 | 1552.52 | 92 | 195.65 | 1532.29 |
| **42** | 193.15 | 1552.12 | 93 | 195.70 | 1531.90 |
| **43** | 193.20 | 1551.72 | 94 | 195.75 | 1531.51 |
| **44** | 193.25 | 1551.32 | 95 | 195.80 | 1531.12 |
| **45** | 193.30 | 1550.92 | 96 | 195.85 | 1530.72 |
| **46** | 193.35 | 1550.52 | 97 | 195.90 | 1530.33 |
| **47** | 193.40 | 1550.12 | 98 | 195.95 | 1529.94 |
| **48** | 193.45 | 1549.72 | 99 | 196.00 | 1529.55 |
| **49** | 193.50 | 1549.32 | 100 | 196.05 | 1529.16 |
| **50** | 193.55 | 1548.91 | 101 | 196.10 | 1528.77 |
| **51** | 193.60 | 1548.51 | 102 | 196.15 | 1528.38 |

## Pin Descriptions

| Pin | Symbol | Name/Descriptions | Ref. |
|---|---|---|---|
| **1** | VeeT | Transmitter Ground (Common with Receiver Ground). | 1 |
| **2** | TX Fault | Transmitter Fault. | 2 |
| **3** | TX Disable | Transmitter Disable. Laser output disabled on high or open. LVTT-I. | 3 |
| **4** | SDA | 2-Wire Serial Interface Data Line (Same as MOD-DEF2 in INF-8074i). LVTTLI/O. | |
| **5** | SCL | 2-Wire Serial Interface Data Line (Same as MOD-DEF2 in INF-8074i). LVTTL-I. | |
| **6** | MOD_ABS | Module Absent, Connect to VeeT or VeeR in Module. | 4 |
| **7** | RS0 | Rate Select 0, optionally controls SFP+ module receiver LVTTL-I. | 5 |
| **8** | LOS | Loss of Signal indication. Logic 0 indicates normal operation. LVTTL-O. | 2 |
| **9** | RS1 | Rate Select 1, optionally controls SFP+ module transmitter. LVTTL-I. | 5 |
| **10** | VeeR | Receiver Ground (Common with Transmitter Ground). | 1 |
| **11** | VeeR | Receiver Ground (Common with Transmitter Ground). | 1 |
| **12** | RD- | Receiver Inverted DATA out. AC Coupled. CML-O. | |
| **13** | RD+ | Receiver Non-inverted DATA out. AC Coupled. CML-O. | |
| **14** | VeeR | Receiver Ground (Common with Transmitter Ground). | 1 |
| **15** | VccR | Receiver Power Supply. | |
| **16** | VccT | Transmitter Power Supply. | |
| **17** | VeeT | Transmitter Ground (Common with Receiver Ground). | 1 |
| **18** | TD+ | Transmitter Non-Inverted DATA in. AC Coupled. CML-I. | |
| **19** | TD- | Transmitter Inverted DATA in. AC Coupled. CML-O. | |
| **20** | VeeT | Transmitter Ground (Common with Receiver Ground). | 1 |

**Notes:**

1. The module signal ground contacts, VeeR and VeeT, should be isolated from the module case.
2. This contact is an open collector/drain output and should be pulled up to the Vcc_Host with resister in the range 4.7KΩ to 10KΩ. Pull ups can be connected to one or several power supplies, however the host board design shall ensure that no module contract has voltage exceeding module VccT/R +0.5.V.
3. Tx_Disable is an input contact with a 4.7KΩ to 10KΩ pull-up resistor to VccT inside module.
4. Mod_ABS is connected to VeeT or VeeR in the SFP+ module. The host may pull the contract up to Vcc_Host with a resistor in the range from 4.7KΩ to 10KΩ. Mod_ABS is asserted "High" when the SFP+ module is physically absent from a host slot.
5. RS0 and RS1 are module inputs and are pulled low to VeeT with >30K resistors in the module. RS0 optionally selects the optical receive signaling rate coverage. RS1 optionally selects the optical transmit signaling rate coverage.
6. These contacts can also be used for RS0 and RS1 if implementing SFF8079. See SFF8079 for details. RS1 is commonly connected to VeeT or VeeR in the classic SFP modules. The host needs to ensure that it will not be damaged if this contact is connected to VeeT or VeeR in the module.
7. The SFP+ module provides two inputs RS0 and RS1 that can optionally be used for rate selection. RS0 controls the receive path signaling rate compatibility, and RS1 controls the transmit path signaling rate compatibility. The host and module may choose to use either, both, or none of these functions. Because contact 9 in the classic SFP INF-8074i is connected to VeeR, and SFP+ host utilizing RS1 must provide short circuit protection.
8. This rate select functionality can also be controlled by software as defined by SFF-8472. Optionally the rate selects methods of Part 2 SFF-8079 may be used instead of the method described here by setting the management declaration bit (A0h byte 93 bit 2) to 1, see SFF-8472.

| Parameter | State | Conditions |
|---|---|---|
| **RS0** | Low | Rx signally rate less than or equal to 4.25GBd. |
| | High | Rx signally rate great than 4.25GBd. |
| **RS1** | Low | Tx signally rate less than or equal to 4.25GBd. |
| | High | Tx signally rate great than 4.25GBd. |

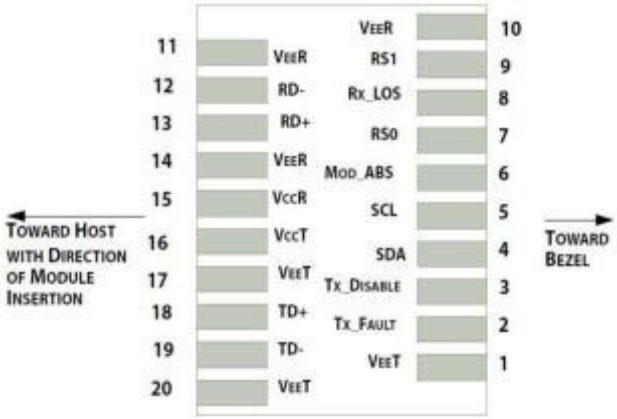


Pin-out of connector Block on Host board

**Recommended Circuit Schematic**

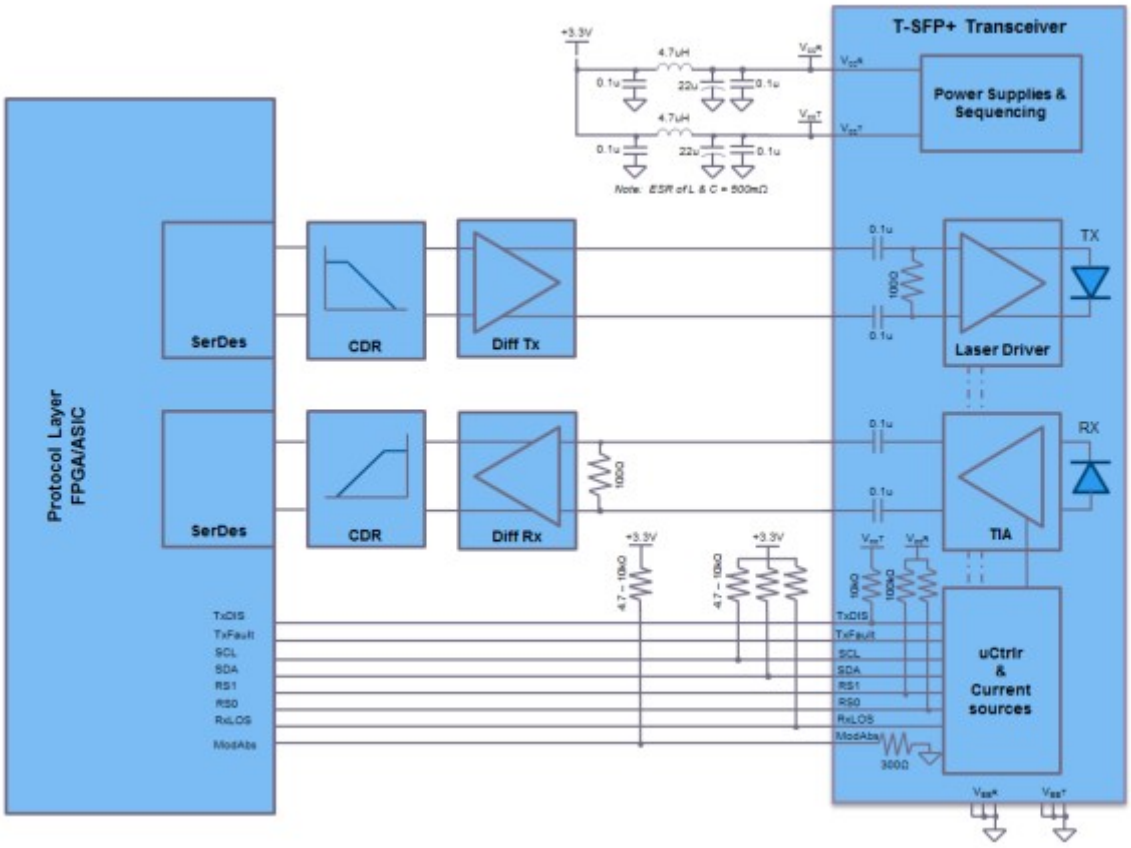

## Absolute Maximum Ratings

| Parameter | Symbol | Min. | Max. | Unit |
|---|---|---|---|---|
| **Storage Temperature** | TS | -40 | 85 | ºC |
| **Supply Voltage** | Vcc | -0.3 | 4.0 | V |
| **Operating Humidity** | RH | 5 | 85 | % |
| **Receive input optical power (damage threshold)** | Pdth | | +4 | dBm |

## Recommended Operating Conditions

| Parameter | Symbol | Min. | Typ. | Max. | Unit |
|---|---|---|---|---|---|
| **Power Supply Voltage** | Vcc | 3.13 | 3.30 | 3.47 | V |
| **Case Operating Temperature – Commercial** | Tc | -5 | | 70 | °C |
| **9/125 µm SMF** | Lmax | | | 80 | km |

## Electrical Characteristics

| Parameter | Symbol | Min. | Typ. | Max. | Unit | Notes |
|---|---|---|---|---|---|---|
| **Transmitter** | | | | | | |
| **Differential data input swing** | Vin, pp | 120 | 600 | 850 | mV | |
| **Input differential impedance** | Rin | 85 | 100 | 115 | Ω | 1 |
| **TX Disable-High** | | 2.0 | | Vcc+0.3 | V | |
| **TX Disable-Low** | | Vee | | Vee+0.8 | V | |
| **TX Fault-High** | | 2.0 | | Vcc+0.3 | V | |
| **TX Fault-Low** | | Vee | | Vee+0.8 | V | |
| **Receiver** | | | | | | |
| **Single ended data output swing** | Vout, pp | 350 | 400 | 700 | mV | |
| **LOS-High** | | 2.0 | | Vcc+0.3 | V | |
| **LOS-Low** | | Vee | | Vee+0.8 | V | |

**Notes:**

1. AC coupled.

## Optical Characteristics

| Parameter | | Symbol | Min. | Typ. | Max. | Unit | Notes |
|---|---|---|---|---|---|---|---|
| **Transmitter** | | | | | | | |
| **Output Opt. Power** | | PO | 0 | | 5 | dBm | |
| **Optical Extinction Ratio** | | ER | 9 | | | dB | |
| **Side Mode Suppression Ratio** | | SMSR | 35 | | | dB | |
| **Center Wavelength Spacing** | | | | 50 | | GHZ | |
| **Optical Wavelength** | | λ | 1528.38 | | 1568.77 | nm | |
| **Frequency stability (BOL)** | | | ƒc –1.5 | | ƒc +1.5 | GHz | |
| **Frequency stability (EOL)** | | | ƒc –2.5 | | ƒc +2.5 | GHz | |
| **Channel tuning time** | | | | | 50 | ms | |
| **Jitter Generation** | 4MHz to 80MHz | | | | 0.1 | | |
| | 20kHz to 80MHz | | | | 0.3 | | |
| **Spectral Width** | | | | | 200 | pm | |
| **Relative Intensity Noise** | | RIN | | | -130 | dB/Hz | |
| **Return Loss** | | | 24 | | | dB | |
| **Receiver** | | | | | | | |
| **Overload** | | PO | -8 | | | dBm | |
| **Receiver Reflectance** | | Rrx | | | -23 | dB | |
| **LOS De-Assert** | | LOSD | | | -26 | dBm | |
| **LOS Assert** | | LOSA | -33.5 | | | dBm | |
| **LOS Hysteresis** | | | 0.5 | | 5 | dB | |

**Notes:**

2. Measured at 9.9532GBs, PRBS^31-1, NRZ.
3. Measured at 10.3125Gbs, Non-framed PRBS2^31-1, NRZ.
4. Non-FEC rate refers 9.9/10.3/10.5 Gbs, and FEC rate refers 10.7/11.1/11.3 Gbs, BER of 1E-12 for non-FEC rate, and 1E-4 for FEC rate.

**Mechanical Specifications**

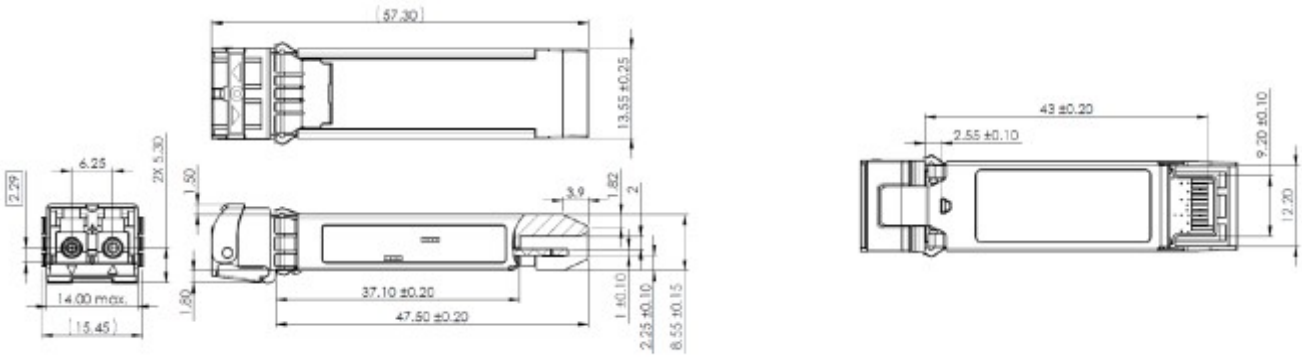


**EEPROM Information**

EEPROM memory map specific data field description is as below:

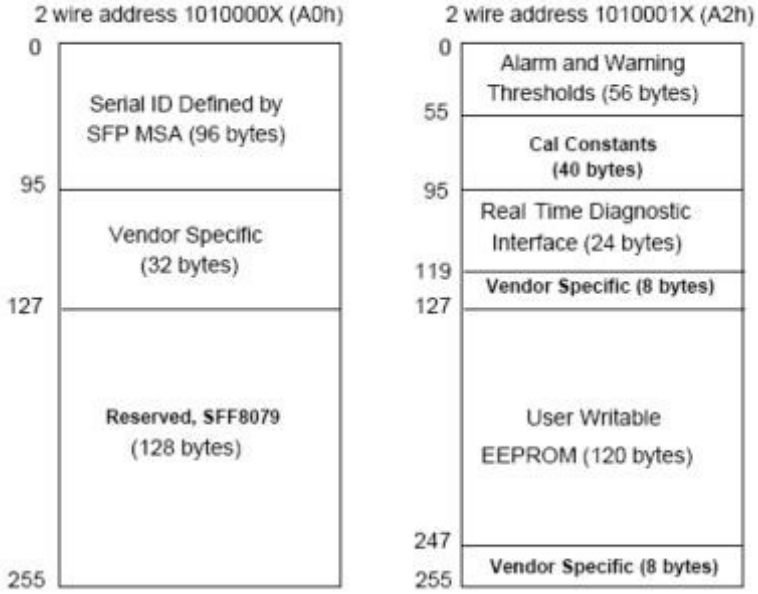

**Digital Diagnostic Monitoring Interface**

The digital diagnostic monitoring interface also defines another 256-byte memory map in EEPROM, which makes use of the 8-bit address 1010001X (A2h). The monitoring specification of this product is described in this table.

| Parameter | Range | Accuracy | Calibration |
|---|---|---|---|
| **Temperature** | 0°C to 70°C (C) | ±3°C | Internal |
| **Voltage** | 2.97V to 3.63V | ±3% | Internal |
| **Bias Current** | 0mA to 100mA | ±10% | Internal |
| **TX Power** | 0dBm to 4dBm | ±2dB | Internal |
| **RX Power** | -24dBm to -8dBm | ±2dB | Internal |

**About ProLabs**

Our extensive experience comes as standard. For over 20 years ProLabs has delivered optical connectivity solutions that give our customers freedom and choice through our ability to provide seamless interoperability. At the heart of our company is the ability to provide state-of-the-art optical transport and connectivity solutions that are compatible with more than 100 optical switching and transport platforms.

**A Complete Portfolio of Network Solutions**

ProLabs is focused on innovations in optical transport and connectivity. The combination of our knowledge of optics and networking equipment enables ProLabs to be your single source for optical transport and connectivity solutions from 100Mb to 1.6T while providing innovative solutions that increase network efficiency. We provide the optical connectivity expertise that is compatible with and enhances your switching and transport equipment.

**The Trusted Partner**

Customer service is our number one value. ProLabs has invested in people, labs and manufacturing capacity to ensure compatible products, and immediate answers to your questions. With Engineering and Manufacturing offices in the U.K. and U.S. augmented by field offices throughout the U.S., U.K. and Asia, ProLabs is able to be our customers best advocate 24 hours a day.

**Contact Information**

ProLabs US

Email: sales@prolabs.com
Telephone: 952-852-0252

ProLabs UK

Email: salessupport@prolabs.com
Telephone: +44 1285 719 600