SFP-10G-DZ-57.77-C

Arista Networks® SFP-10G-DZ-57.77 Compatible TAA 10GBase-DWDM SFP+ Transceiver C-Band 50GHz (SMF, 1557.77nm, 80km, LC, DOM)

Features:

- SFF-8432 and SFF-8472 Compliance
- Duplex LC Connector
- Temperature-stabilized EML transmitter and APD receiver
- Single-mode Fiber
- Commercial Temperature 0 to 70 Celsius
- Hot Pluggable
- Metal with Lower EMI
- Excellent ESD Protection
- RoHS Compliant and Lead Free

Applications:

- 10x Gigabit Ethernet over DWDM
- 8x/10x Fibre Channel
- Access, Metro and Enterprise

Product Description

This Arista Networks® SFP-10G-DZ-57.77 compatible SFP+ transceiver provides 10GBase-DWDM throughput up to 80km over single-mode fiber (SMF) using a wavelength of 1557.77nm via an LC connector. It can operate at temperatures between 0 and 70C. Our transceiver is built to meet or exceed OEM specifications and is guaranteed to be 100% compatible with Arista Networks®. It has been programmed, uniquely serialized, and tested for data-traffic and application to ensure that it will initialize and perform identically. All of our transceivers comply with Multi-Source Agreement (MSA) standards to provide seamless network integration. Additional product features include Digital Optical Monitoring (DOM) support which allows access to real-time operating parameters. This transceiver is Trade Agreements Act (TAA) compliant. We stand behind the quality of our products and proudly offer a limited lifetime warranty.

ProLabs' transceivers are RoHS compliant and lead-free.

TAA refers to the Trade Agreements Act (19 U.S.C. & 2501-2581), which is intended to foster fair and open international trade. TAA requires that the U.S. Government may acquire only "U.S.-made or designated country end products.")

Rev. 012026

Regulatory Compliance

- ESD to the Electrical PINs: compatible with MIL-STD-883E Method 3015.7.
- ESD to the Duplex LC Receptacle: compatible with IEC 61000-4-2
- Immunity compatible with IEC 61000-4-3.
- EMI compatible with FCC Part 15 Class B EN55022 Class B (CISPR 22B) VCCI Class B.
- Laser Eye Safety compatible with FDA 21CFR 1040.10 and 1040.11 EN60950, EN (IEC) 60825-1,2.
- RoHs compliant with 2002/95/EC 4.1&4.2 2005/747/EC.

Tunable SFP+ Channel Number and Wavelength

ITU Channel	Frequency (THz)	Center Wavelength (nm)	ITU Channel	Frequency (THz)	Center Wavelength (nm)
1	191.10	1568.77	52	193.65	1548.11
2	191.15	1568.36	53	193.70	1547.72
3	191.20	1567.95	54	193.75	1547.32
4	191.25	1567.54	55	193.80	1546.92
5	191.30	1567.13	56	193.85	1546.52
6	191.35	1566.72	57	193.90	1546.12
7	191.40	1566.31	58	193.95	1545.72
8	191.45	1565.90	59	194.00	1545.32
9	191.50	1565.50	60	194.05	1544.92
10	191.55	1565.09	61	194.10	1544.53
11	191.60	1564.68	62	194.15	1544.13
12	191.65	1564.27	63	194.20	1543.73
13	191.70	1563.86	64	194.25	1543.33
14	191.75	1563.45	65	194.30	1542.94
15	191.80	1563.05	66	194.35	1542.54
16	191.85	1562.64	67	194.40	1542.14
17	191.90	1562.23	68	194.45	1541.75
18	191.95	1561.83	69	194.50	1541.35
19	192.00	1561.42	70	194.55	1540.95
20	192.05	1561.01	71	194.60	1540.56
21	192.10	1560.61	72	194.65	1540.16
22	192.15	1560.20	73	194.70	1539.77
23	192.20	1559.79	74	194.75	1539.37
24	192.25	1559.39	75	194.80	1538.98
25	192.30	1558.98	76	194.85	1538.58
26	192.35	1558.58	77	194.90	1538.19
27	192.40	1558.17	78	194.95	1537.79
28	192.45	1557.77	79	195.00	1537.40
29	192.50	1557.36	80	195.05	1537.00
30	192.55	1556.96	81	195.10	1536.61
31	192.60	1556.55	82	195.15	1536.22
32	192.65	1556.15	83	195.20	1535.82
33	192.70	1555.75	84	195.25	1535.43
34	192.75	1555.34	85	195.30	1535.04
35	192.80	1554.94	86	195.35	1534.64
36	192.85	1554.54	87	195.40	1534.25

37	192.90	1554.13	88	195.45	1533.86
38	192.95	1553.73	89	195.50	1533.47
39	193.00	1553.33	90	195.55	1533.07
40	193.05	1552.93	91	195.60	1532.68
41	193.10	1552.52	92	195.65	1532.29
42	193.15	1552.12	93	195.70	1531.90
43	193.20	1551.72	94	195.75	1531.51
44	193.25	1551.32	95	195.80	1531.12
45	193.30	1550.92	96	195.85	1530.72
46	193.35	1550.52	97	195.90	1530.33
47	193.40	1550.12	98	195.95	1529.94
48	193.45	1549.72	99	196.00	1529.55
49	193.50	1549.32	100	196.05	1529.16
50	193.55	1548.91	101	196.10	1528.77
51	193.60	1548.51	102	196.15	1528.38

Pin Descriptions

Pin	Symbol	Name/Descriptions	Ref.
1	VeeT	Transmitter Ground (Common with Receiver Ground).	1
2	TX Fault	Transmitter Fault.	2
3	TX Disable	Transmitter Disable. Laser output disabled on high or open. LVTT-I.	3
4	SDA	2-Wire Serial Interface Data Line (Same as MOD-DEF2 in INF-8074i). LVTTLI/O.	
5	SCL	2-Wire Serial Interface Data Line (Same as MOD-DEF2 in INF-8074i). LVTTL-I.	
6	MOD_ABS	Module Absent, Connect to VeeT or VeeR in Module.	4
7	RS0	Rate Select 0, optionally controls SFP+ module receiver LVTTL-I.	5
8	LOS	Loss of Signal indication. Logic 0 indicates normal operation. LVTTL-O.	2
9	RS1	Rate Select 1, optionally controls SFP+ module transmitter. LVTTL-I.	5
10	VeeR	Receiver Ground (Common with Transmitter Ground).	1
11	VeeR	Receiver Ground (Common with Transmitter Ground).	1
12	RD-	Receiver Inverted DATA out. AC Coupled. CML-O.	
13	RD+	Receiver Non-inverted DATA out. AC Coupled. CML-O.	
14	VeeR	Receiver Ground (Common with Transmitter Ground).	1
15	VccR	Receiver Power Supply.	
16	VccT	Transmitter Power Supply.	
17	VeeT	Transmitter Ground (Common with Receiver Ground).	1
18	TD+	Transmitter Non-Inverted DATA in. AC Coupled. CML-I.	
19	TD-	Transmitter Inverted DATA in. AC Coupled. CML-O.	
20	VeeT	Transmitter Ground (Common with Receiver Ground).	1

Notes:

1. The module signal ground contacts, VeeR and VeeT, should be isolated from the module case.
2. This contact is an open collector/drain output and should be pulled up to the Vcc_Host with resister in the range 4.7KΩ to 10KΩ. Pull ups can be connected to one or several power supplies, however the host board design shall ensure that no module contract has voltage exceeding module VccT/R +0.5.V.
3. Tx_Disable is an input contact with a 4.7KΩ to 10KΩ pull-up resistor to VccT inside module.
4. Mod_ABS is connected to VeeT or VeeR in the SFP+ module. The host may pull the contract up to Vcc_Host with a resistor in the range from 4.7KΩ to 10KΩ. Mod_ABS is asserted "High" when the SFP+ module is physically absent from a host slot.
5. RS0 and RS1 are module inputs and are pulled low to VeeT with >30K resistors in the module. RS0 optionally selects the optical receive signaling rate coverage. RS1 optionally selects the optical transmit signaling rate coverage.
6. These contacts can also be used for RS0 and RS1 if implementing SFF8079. See SFF8079 for details. RS1 is commonly connected to VeeT or VeeR in the classic SFP modules. The host needs to ensure that it will not be damaged if this contact is connected to VeeT or VeeR in the module.
7. The SFP+ module provides two inputs RS0 and RS1 that can optionally be used for rate selection. RS0 controls the receive path signaling rate compatibility, and RS1 controls the transmit path signaling rate compatibility. The host and module may choose to use either, both, or none of these functions. Because contact 9 in the classic SFP INF-8074i is connected to VeeR, and SFP+ host utilizing RS1 must provide short circuit protection.
8. This rate select functionality can also be controlled by software as defined by SFF-8472. Optionally the rate selects methods of Part 2 SFF-8079 may be used instead of the method described here by setting the management declaration bit (A0h byte 93 bit 2) to 1, see SFF-8472.

Parameter	State	Conditions
RS0	Low	Rx signally rate less than or equal to 4.25GBd.
	High	Rx signally rate great than 4.25GBd.
RS1	Low	Tx signally rate less than or equal to 4.25GBd.
	High	Tx signally rate great than 4.25GBd.

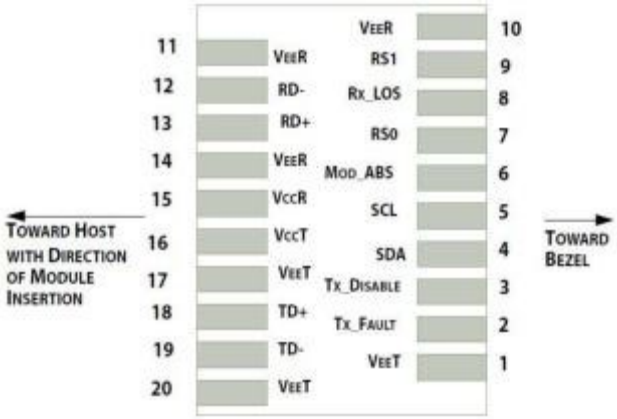

Pin-out of connector Block on Host board

Recommended Circuit Schematic

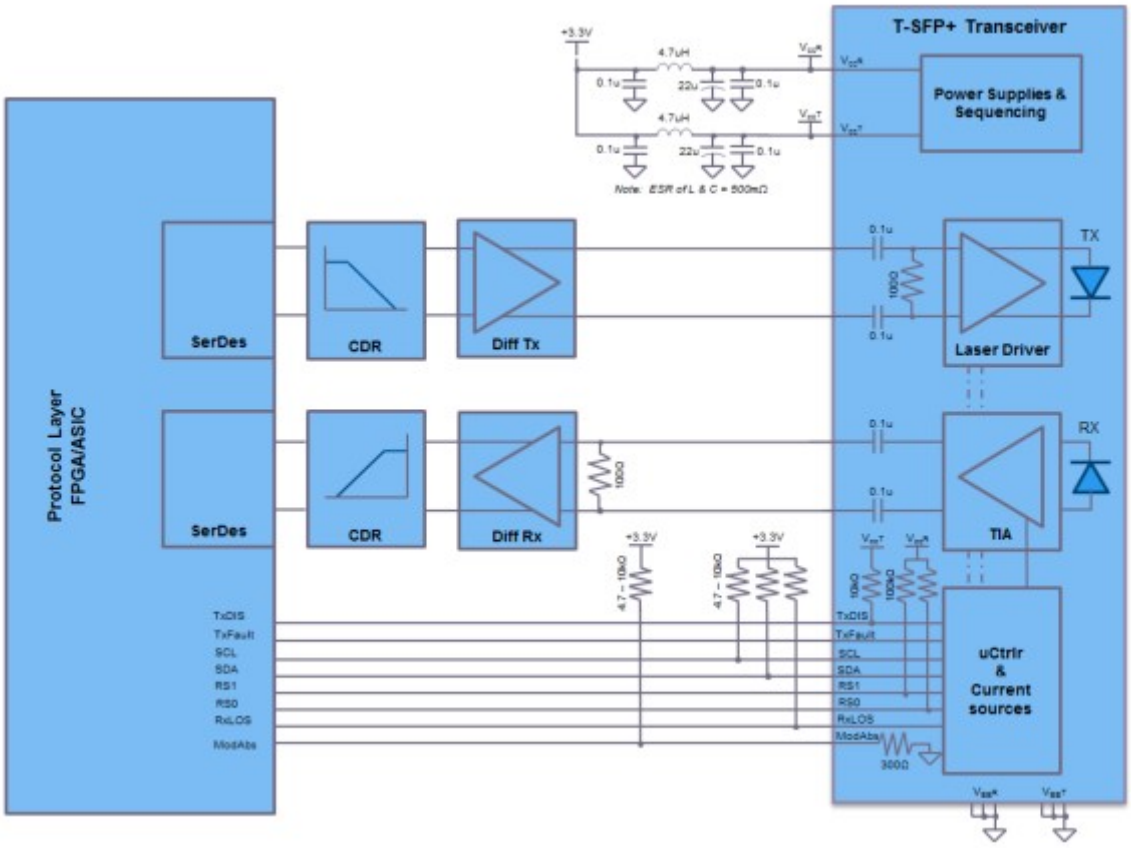

Absolute Maximum Ratings

Parameter	Symbol	Min.	Max.	Unit
Storage Temperature	TS	-40	85	ºC
Supply Voltage	Vcc	-0.3	4.0	V
Operating Humidity	RH	5	85	%
Receive input optical power (damage threshold)	Pdth		+4	dBm

Recommended Operating Conditions

Parameter	Symbol	Min.	Typ.	Max.	Unit
Power Supply Voltage	Vcc	3.13	3.30	3.47	V
Case Operating Temperature – Commercial	Tc	-5		70	°C
9/125 µm SMF	Lmax			80	km

Electrical Characteristics

Parameter	Symbol	Min.	Typ.	Max.	Unit	Notes
Transmitter						
Differential data input swing	Vin, pp	120	600	850	mV	
Input differential impedance	Rin	85	100	115	Ω	1
TX Disable-High		2.0		Vcc+0.3	V	
TX Disable-Low		Vee		Vee+0.8	V	
TX Fault-High		2.0		Vcc+0.3	V	
TX Fault-Low		Vee		Vee+0.8	V	
Receiver						
Single ended data output swing	Vout, pp	350	400	700	mV	
LOS-High		2.0		Vcc+0.3	V	
LOS-Low		Vee		Vee+0.8	V	

Notes:

1. AC coupled.

Optical Characteristics

Parameter		Symbol	Min.	Typ.	Max.	Unit	Notes
Transmitter							
Output Opt. Power		PO	0		5	dBm	
Optical Extinction Ratio		ER	9			dB	
Side Mode Suppression Ratio		SMSR	35			dB	
Center Wavelength Spacing				50		GHZ	
Optical Wavelength		λ	1528.38		1568.77	nm	
Frequency stability (BOL)			ƒc –1.5		ƒc +1.5	GHz	
Frequency stability (EOL)			ƒc –2.5		ƒc +2.5	GHz	
Channel tuning time					50	ms	
Jitter Generation	4MHz to 80MHz				0.1		
	20kHz to 80MHz				0.3		
Spectral Width					200	pm	
Relative Intensity Noise		RIN			-130	dB/Hz	
Return Loss			24			dB	
Receiver							
Overload		PO	-8			dBm	
Receiver Reflectance		Rrx			-23	dB	
LOS De-Assert		LOSD			-26	dBm	
LOS Assert		LOSA	-33.5			dBm	
LOS Hysteresis			0.5		5	dB	

Notes:

2. Measured at 9.9532GBs, PRBS^31-1, NRZ.
3. Measured at 10.3125Gbs, Non-framed PRBS2^31-1, NRZ.
4. Non-FEC rate refers 9.9/10.3/10.5 Gbs, and FEC rate refers 10.7/11.1/11.3 Gbs, BER of 1E-12 for non-FEC rate, and 1E-4 for FEC rate.

Mechanical Specifications

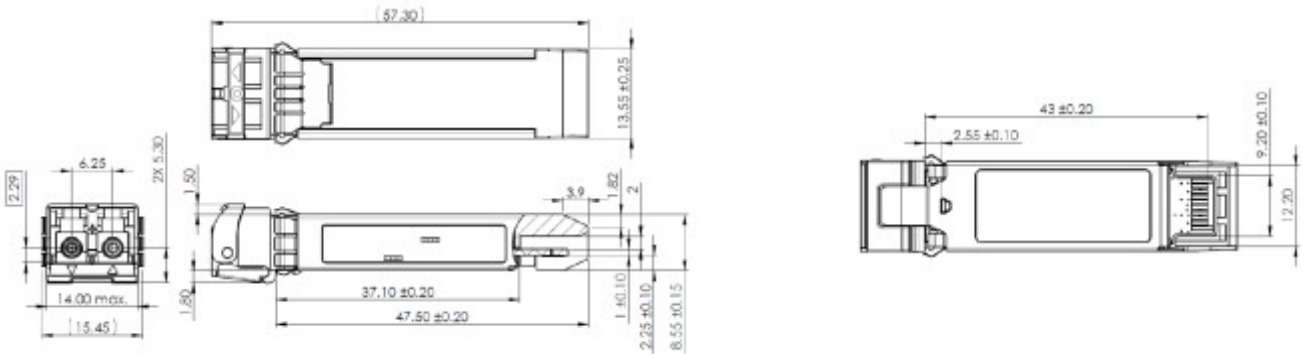

EEPROM Information

EEPROM memory map specific data field description is as below:

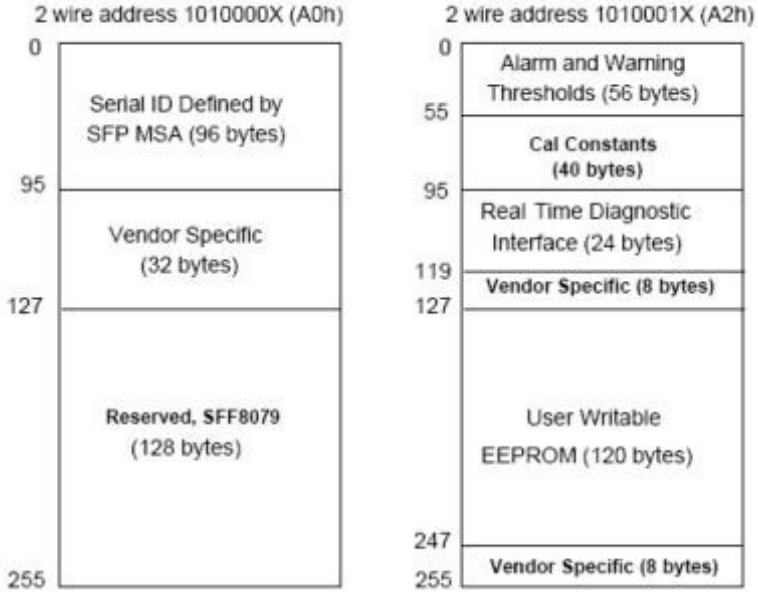

Digital Diagnostic Monitoring Interface

The digital diagnostic monitoring interface also defines another 256-byte memory map in EEPROM, which makes use of the 8-bit address 1010001X (A2h). The monitoring specification of this product is described in this table.

Parameter	Range	Accuracy	Calibration
Temperature	0°C to 70°C (C)	±3°C	Internal
Voltage	2.97V to 3.63V	±3%	Internal
Bias Current	0mA to 100mA	±10%	Internal
TX Power	0dBm to 4dBm	±2dB	Internal
RX Power	-24dBm to -8dBm	±2dB	Internal

About ProLabs

Our extensive experience comes as standard. For over 20 years ProLabs has delivered optical connectivity solutions that give our customers freedom and choice through our ability to provide seamless interoperability. At the heart of our company is the ability to provide state-of-the-art optical transport and connectivity solutions that are compatible with more than 100 optical switching and transport platforms.

A Complete Portfolio of Network Solutions

ProLabs is focused on innovations in optical transport and connectivity. The combination of our knowledge of optics and networking equipment enables ProLabs to be your single source for optical transport and connectivity solutions from 100Mb to 1.6T while providing innovative solutions that increase network efficiency. We provide the optical connectivity expertise that is compatible with and enhances your switching and transport equipment.

The Trusted Partner

Customer service is our number one value. ProLabs has invested in people, labs and manufacturing capacity to ensure compatible products, and immediate answers to your questions. With Engineering and Manufacturing offices in the U.K. and U.S. augmented by field offices throughout the U.S., U.K. and Asia, ProLabs is able to be our customers best advocate 24 hours a day.

Contact Information

ProLabs US

Email: sales@prolabs.com
Telephone: 952-852-0252

ProLabs UK

Email: salessupport@prolabs.com
Telephone: +44 1285 719 600