

Two-Piece Receiver Bulk Cart

1700C Receiver Bulk Cart - Operator's Manual



Part No. 139512 Rev. 1.0

Contains Some Maintenance Information

Orchard-Rite®

Table of Contents

Warranty Reminder 3
Introduction 4
Update Notices & Serial Number Information 5
Machine Characteristics 6
Safety Precautions 7
DO's and DO NOT's of Operation and Maintenance 8
Hazards 9
Hazards (Continued) 10
Primary Hazard Decal Locations 11
Lift Jack Mounts and Tongue Adjustment 12
Maintenance and Service Schedule 13
Service Specifications 14
Grease Locations 15
Conveyor Belt Inspection Cover Locations 16
Jack Placement and Tie Down Locations 17
Hook-Up Directions 18
Hydraulic Hose Connections 19
Offloading Directions 20
Drive and Steering Variants 21
Drive Hub Configurations for Drive or Tow 22
Legal Notices 23

ORCHARD-RITE®, 1700C, and Two-Piece Receiver are trademarks of Orchard-Rite® Ltd., Inc.
All Rights Reserved.

Warranty Reminder

Warranty terms are provided with your purchase documentation. Contact your authorized Orchard-Rite representative if you need a copy.

ORCHARD-RITE®, 1700C, and Two-Piece Receiver are trademarks of Orchard-Rite® Ltd., Inc.
All Rights Reserved.

Part No. 139512 Rev 1.0

Introduction

We would like to welcome you as a new owner of our Orchard-Rite® Ltd., Inc. 1700C Bulk Cart. Your Orchard-Rite cart is backed by years of hands-on experience, research, development, and testing. You will find that your Orchard-Rite cart is engineered and manufactured with the highest quality components available to our industry.

We encourage you to read this owner's manual in its entirety, and to review its contents with all your operators and service personnel **before placing the bulk cart into service**. If an intended operator cannot read this English language version, **DO NOT ALLOW THE INDIVIDUAL TO OPERATE THE MACHINE** until a qualified translator has reviewed the entire contents of this owner's manual with them, including all safety precautions. The safety precautions should be read by all personnel who might encounter the Orchard-Rite 1700C Bulk Cart.

The Orchard-Rite 1700C Bulk Cart is designed solely for receiving and transporting harvested orchard crops within orchard operations, towed by an appropriate agricultural vehicle. Any other use is prohibited and constitutes misuse. Only trained operators who are authorized by the owner, are familiar with the controls, and have read and understood this manual may operate this equipment.

Should questions arise regarding the operation or maintenance of your bulk cart, please be sure to contact your authorized Orchard-Rite® Ltd., Inc. dealer. For a current list of dealers, please visit orchard-rite.com.

Thank you for choosing the Orchard-Rite 1700C Bulk Cart. We sincerely appreciate the trust you have placed in us to aid in your orchard harvest needs. At Orchard-Rite we continue to look to the future to bring new ideas in orchard technologies to our growers, and to continue as the industry leader in harvest innovations.

Manufactured by:

Orchard-Rite® Ltd., Inc.
1619 W. Ahtanum Rd.
Union Gap, WA 98903
United States
(509) 248-8785

ORCHARD-RITE®, 1700C, and Two-Piece Receiver are trademarks of Orchard-Rite® Ltd., Inc.
All Rights Reserved.

Update Notices & Serial Number Information

Bulletin Distribution Notice

Various bulletins are used by Orchard-Rite® Ltd., Inc. to communicate important safety and product information to dealers and machine owners. The information contained in the bulletins is tied to specific machines using the machine model and serial number. Upon receiving your Orchard-Rite machine, be sure to ask your dealer if there are any relevant bulletins pertaining to your machine, and be sure to read and comply with bulletins if applicable.

Contacting your Dealer

Should the need arise to contact your Orchard-Rite® Ltd., Inc. dealer, be ready to supply the model number and serial number of your machine, along with your name and contact information. Your dealer should be contacted for, at minimum, for:

- Accident reporting
- Questions regarding product applications or safety
- Standards and regulatory compliance information
- Current owner updates, such as changes in machine ownership, or changes in owner contact information.

Locating The Model and Serial Number

For the 1700C the nameplate containing the model and serial number is located on the top center of the bulk cart front panel.

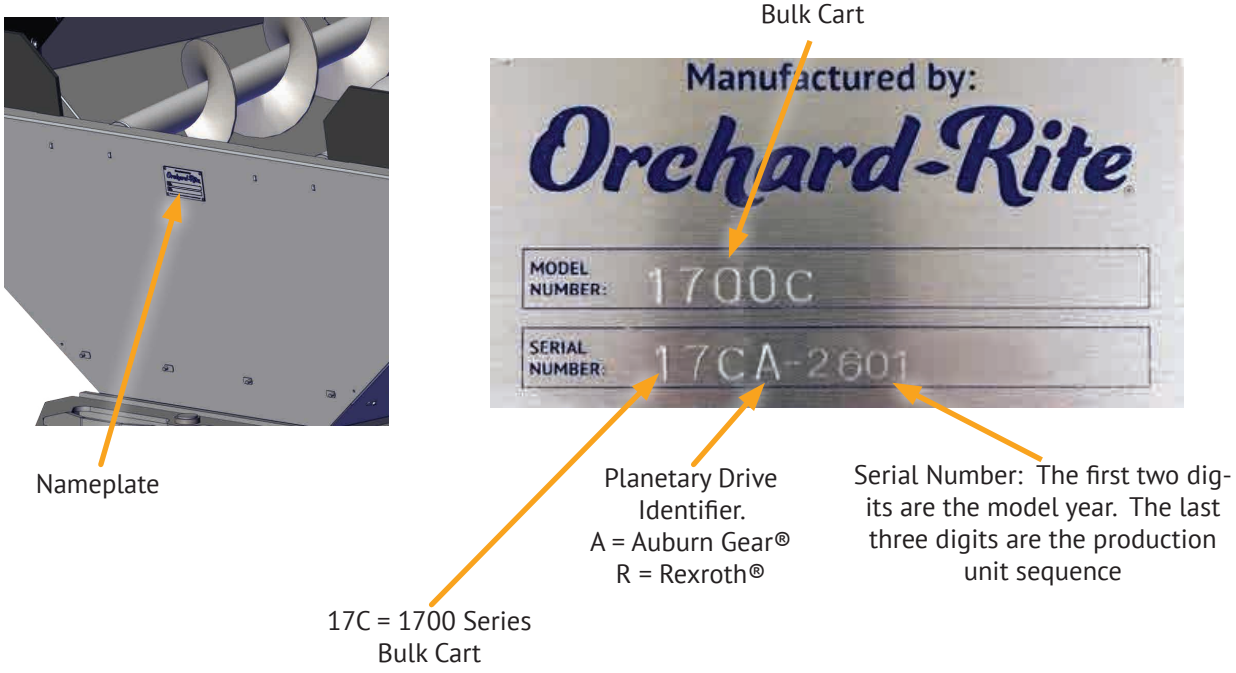

ORCHARD-RITE®, 1700C, and Two-Piece Receiver are trademarks of Orchard-Rite® Ltd., Inc.
All Rights Reserved.

Machine Characteristics

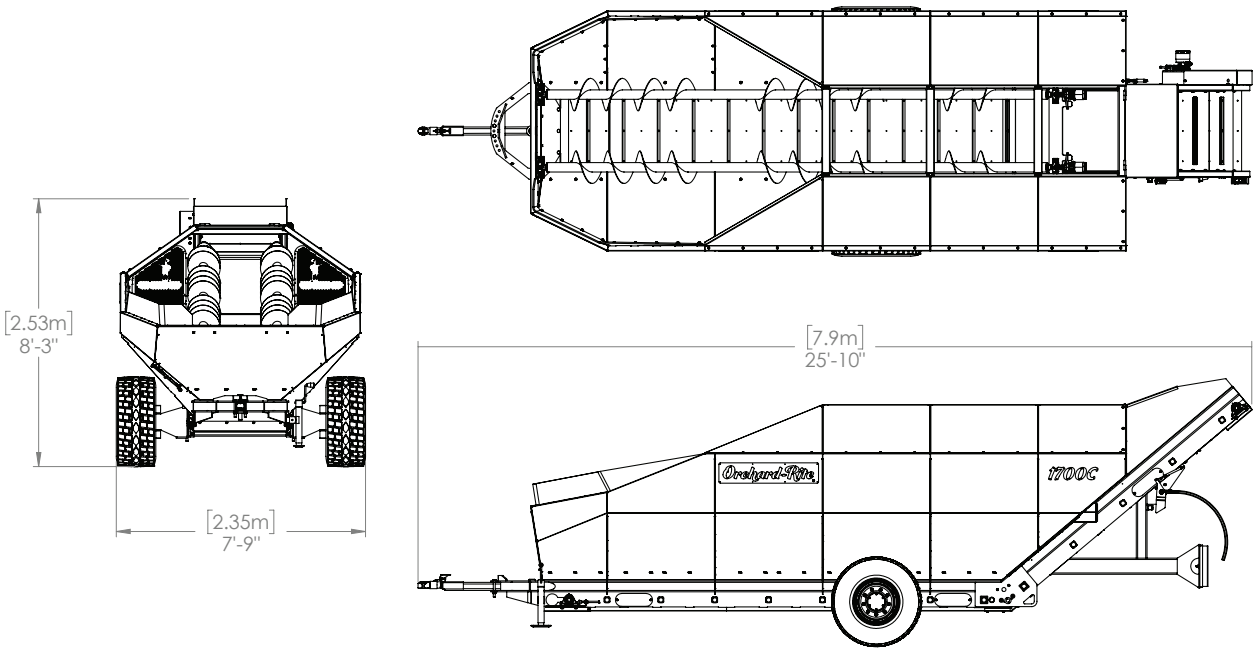

Empty Weight	7,250 lb.
Maximum Loaded Weight	22,000 lb.
Height	2.53m / 8 ft. 3 in. (Approx.)
Width	2.35m / 7 ft. 9 in. (Approx.)
Length	7.90m / 25 ft. 10 in. (Approx.)
Tire Size	33L x 15.5, 14 ply
Storage Capacity	495 cu ft.
Conveyor Belt Width	30 in.
Hydraulic Requirement	18-20 GPM at 2,000 PSI
Drive (if Equipped)	Hydrostatic with 2 separate wheel motors

ORCHARD-RITE®, 1700C, and Two-Piece Receiver are trademarks of Orchard-Rite® Ltd., Inc.
All Rights Reserved.

Safety Precautions

Before operating this equipment, **READ** this entire manual carefully.

- The operator **MUST** be familiar with all of the controls and their functions before attempting to operate, start or run the equipment or the vehicle towing it.
- **NEVER** operate the equipment while under the influence of alcohol or drugs, during times of illness, or while using medication that could impair hearing, vision, or good judgment.
- All personnel except the operator **MUST** stay 75 feet/23 meters away from the equipment and any vehicle connected to it before it is started or operated.
- **NEVER** stand inside the hopper or place any part of your body onto the conveyor, even if the engine of the connected vehicle is not running.
- If you are approaching the equipment while the engine of the connected vehicle is running, **STOP** and be **SURE** that the operator sees you and shuts the engine off before you continue to approach.
- **STOP** operation of the equipment if the operator's vision becomes obscured for any reason. Be sure to resolve the problem before continuing operation.
- This equipment is **NOT** to be driven on public roads.
- **STOP** all movement of the equipment including the conveyor and auger screws, disconnect the cart from its towing vehicle or shut the engine off and remove the ignition key of the connected vehicle **BEFORE** maintenance or repair work is started.
- **NEVER** use the machine to transport additional personnel or equipment.
- **NEVER** work beneath the machine unless the engine of the connected vehicle is shut off with the ignition key removed or the bulk cart is disconnected and the bulk cart is parked on level ground.
- **ALWAYS** relieve hydraulic system pressure before connecting or disconnecting lines.
- **NEVER** use any part of your body to check for leaks in the hydraulic system - use a piece of cardboard or wood.
- **NEVER** operate the cart on slopes exceeding a 10% grade and **NEVER** tow the loaded cart above 10 mph.

BE ALERT. THE INJURY YOU PREVENT OR LIFE YOU SAVE MAY BE YOUR OWN.

ORCHARD-RITE®, 1700C, and Two-Piece Receiver are trademarks of Orchard-Rite® Ltd., Inc.
All Rights Reserved.

DO's and DO NOT's of Operation and Maintenance

Listed below are a few of the "DO'S AND DO NOT'S" which pertain to both the operation and upkeep of your Orchard-Rite Bulk Cart.

DO read and understand this operator's manual before operating the bulk cart.

DO follow the maintenance schedule included in this manual.

DO inspect the conveyor belt frequently for wear or tears and replace if necessary.

DO allow oil in the hydraulics to warm before operating the bulk cart.

DO stop and look before backing up and/or turning.

DO wear appropriate personal protective equipment (PPE) when working on the hydraulic system.

DO keep all persons clear of the conveyor and discharge area when unloading.

DO NOT skip the daily or scheduled maintenance routine.

DO NOT operate the bulk cart without all covers securely in place.

DO NOT weld on the wheel rims.

DO NOT climb on the auger screw assemblies.

DO NOT use any part of your body to check for hydraulic leaks.

DO NOT approach or reach into conveyor while hydraulic lines are connected and pressurized.

ORCHARD-RITE®, 1700C, and Two-Piece Receiver are trademarks of Orchard-Rite® Ltd., Inc.
All Rights Reserved.



Hazards

The Orchard-Rite Bulk Cart is designed to enhance the efficiency of harvesting operations. However, operators must be aware of various hazards associated with its operation. This section outlines key hazard types to ensure safe usage and compliance with safety protocols.

DANGER: Indicates an immediate hazardous situation that, if not avoided, will result in death or serious injury.

WARNING: Indicates a potentially hazardous situation that, if not avoided, could result in death or serious injury.

CAUTION: Indicates a potentially hazardous situation that, if not avoided, may result in minor or moderate injury.

NOTICE: Indicates information considered important but not hazard-related.



Mechanical Hazards

- Crushing Hazard: Risk of being crushed by moving parts, such as the conveyor.
- Shearing Hazard: Potential for body parts to be caught between moving components.
- Entanglement Hazard: Possibility of clothing or body parts being caught in auger screws or conveyor.



Electrical Hazards

- Shock Hazard: Risk of electric shock from worn wiring or exposed electrical components.
- Burn Hazard: Potential for burns from hot electrical components or wires.
- Component Damage: Improper or mis-wired connections can cause damage to electrical components.

ORCHARD-RITE®, 1700C, and Two-Piece Receiver are trademarks of Orchard-Rite® Ltd., Inc.
All Rights Reserved.

Hazards (Continued)



Thermal Hazards

- Burn Hazard: Risk of burns from contact with hot surfaces, such hydraulic components.



Chemical Hazards

- Toxic Exposure: Exposure to hazardous chemicals used in the hydraulic system.
- Spill Hazard: Risk of chemical spills during maintenance or operation, leading to potential environmental contamination and personal injury.



Hydraulic Fluid Injection Hazard

- High-Pressure Fluid: Hydraulic system operates at pressures up to 2,000 PSI. Escaping hydraulic fluid can penetrate the skin and cause severe injury.
- Injection Injury: If ANY fluid penetrates the skin, seek medical attention immediately - injected fluid must be surgically removed within a few hours to prevent gangrene or other permanent disabilities.



Operational Hazards

- Visibility Hazard: Limited visibility from the operator's seat.
- Terrain Hazard: Risk of rollovers or tipping on uneven or sloped terrain exceeding 10% grade.
- Public Road Use Hazard: Driving the equipment on public roads poses a significant danger due to its size and limited maneuverability.
- Loaded Speed Limit: Keep travel speeds under 10 mph when fully loaded.



Maintenance Hazards

- Mechanical Injury: Risk of injury while performing maintenance tasks if the machine is not properly shut down.
- Chemical Exposure: Potential for exposure to hazardous fluids during maintenance procedure.

ORCHARD-RITE®, 1700C, and Two-Piece Receiver are trademarks of Orchard-Rite® Ltd., Inc.
All Rights Reserved.

Primary Hazard Decal Locations



Front Panel Auger Warning

Located on the left and right sides of the front panel of the main compartment.



Conveyor Gear and Chain Warning

Located on the rear right side of the bulk cart next to the tension adjustment bolt and the drive motor for the conveyor belt

ORCHARD-RITE®, 1700C, and Two-Piece Receiver are trademarks of Orchard-Rite® Ltd., Inc.
All Rights Reserved.

Lift Jack Mounts and Tongue Adjustment



Tongue Jack Attachment Locations

The 1700C Bulk Cart is fitted with a hand-cranked lifting jack (A) that can be fitted to one of two mounting locations. The first location is on the left side of the cart near the front and can be used to lift the cart in the event it needs to be detached while loaded. The second location is on the rear left of the chassis and is used to level the back-heavy cart when unloaded.

Adjustable Tongue

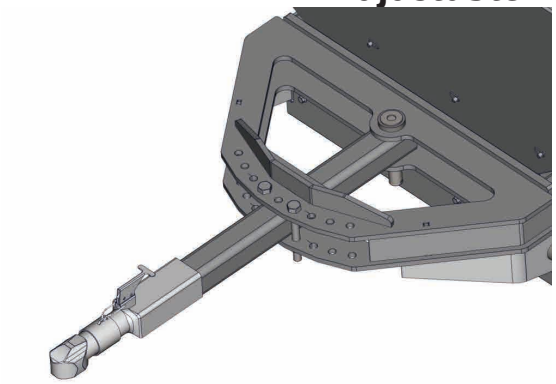

The tongue of the bulk cart is designed so that the cart can be placed close to the center of the harvesting row. It can be adjusted in increments to a maximum of 35-degrees to the left or right. When the desired angle is reached, lock it into place by straddling the tongue between either two nut/bolt pairs or between one nut/bolt set and the frame.

⚠CAUTION: When configured for off-center towing, the turning radius to the side opposite of the adjustment will be increased. Turning or backing up the cart is no longer centered and operators should be aware and make adjustments to avoid collisions and damage to the cart.

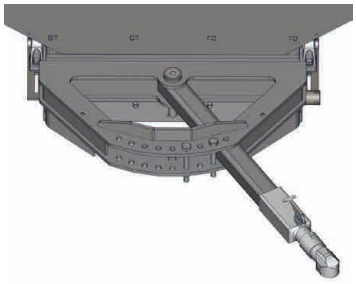

Extreme Left Position Example

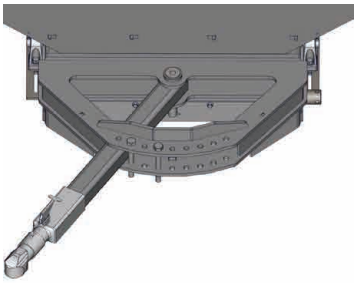

Extreme Right Position Example

ORCHARD-RITE®, 1700C, and Two-Piece Receiver are trademarks of Orchard-Rite® Ltd., Inc.
All Rights Reserved.

Maintenance and Service Schedule

Machine Identification: _____

Record Model and Serial Number Here

	Daily	50 Hours	250 Hours	Yearly
Visual walk around inspection	▬			
Check wheel lug nut torque: 140 ft. lbs. for Auburn Gear hubs 160 ft. lbs. for Rexroth hubs	▬			
Inspect all bolts & fasteners	▬			
Inspect belts	▬			
Inspect hydraulic hoses	▬			
Inspect conveyor belt tension	▬			
Service chassis grease fittings	▬			
Check conveyor switch operation	▬			
Check Oil Level in Power Wheels			▬	
Replace Power Wheel Oil*		▬		▬

▬ = Service Action Required
Blank Space = No Action Required

*Drive Hub manufacturers recommend a 50-hour break-in period after which the oil should be changed. Following that period, yearly replacement is recommended.

ORCHARD-RITE®, 1700C, and Two-Piece Receiver are trademarks of Orchard-Rite® Ltd., Inc.
All Rights Reserved.

Hydraulic System	
Type	AW 68 Hydraulic Oil*
Lubrication Grease Type	Lithium Complex NLGI Approved or Equivalent
Drive Hubs (if Equipped)	
Auburn Gear®	
Oil Type	API-GL-5 80W-90 Gear Oil
Capacity	0.94L / 1 quart
Rexroth®	
Oil Type	ISO 220 Gear Oil
Capacity	1.41L / 1.5 quart

*Hydraulic lines are primed during factory testing and fed from towing vehicles' reservoir. No independent on-board storage capacity.

PARTS

The Orchard-Rite® 1700C Bulk Cart is composed of many parts that have been specially designed and heavily tested. Using parts from an unknown source could lead to machine operation issues and shortened machine life. It is highly recommended that any parts needed for repair or replacement be purchased from your nearest authorized Orchard-Rite® service representative or dealer.

ORCHARD-RITE®, 1700C, and Two-Piece Receiver are trademarks of Orchard-Rite® Ltd., Inc.
All Rights Reserved.

Grease Locations

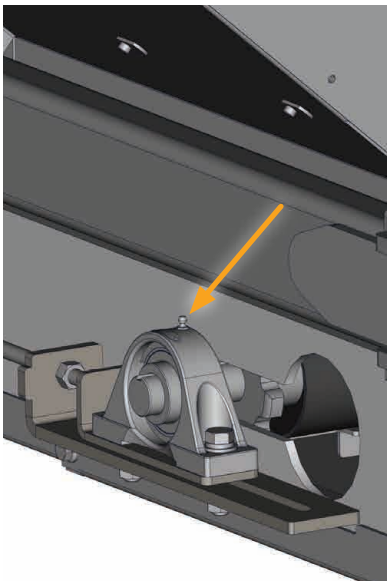

Front right of chassis.

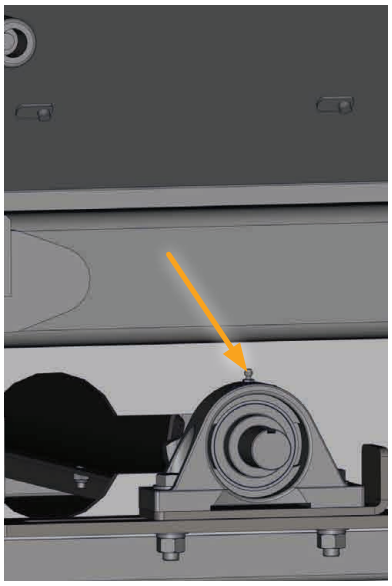

Front left of chassis.

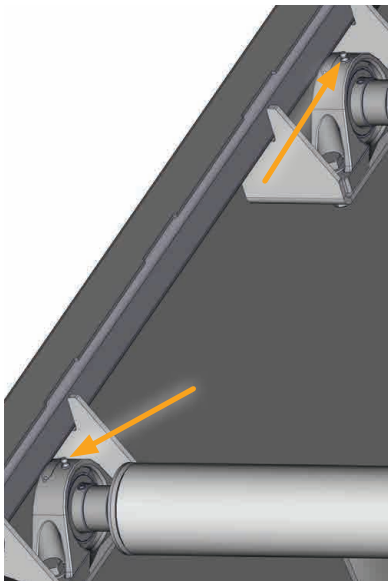

Bearing mounts on front of auger shafts.

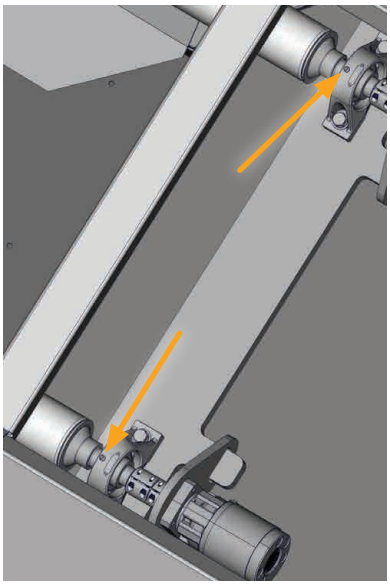

Bearing mounts on rear of auger shafts.

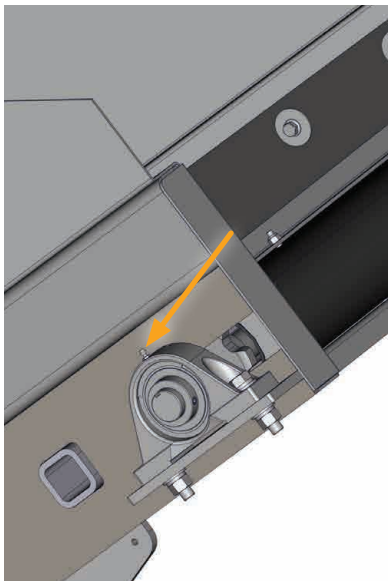

Rear left near end of conveyor.

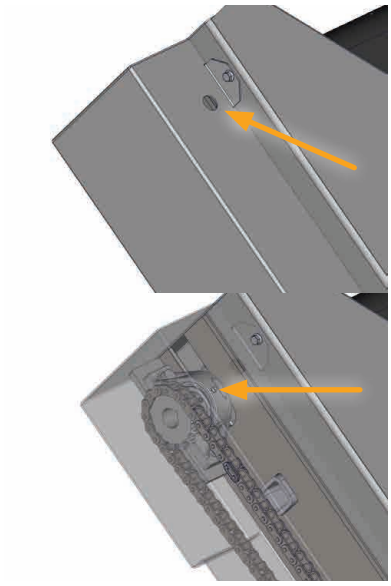

Rear right near end of conveyor, accessed through opening on top. Transparent view shown for exact location.

ORCHARD-RITE®, 1700C, and Two-Piece Receiver are trademarks of Orchard-Rite® Ltd., Inc.
All Rights Reserved.

Part No. 139512 Rev 1.0

Conveyor Belt Inspection Cover Locations

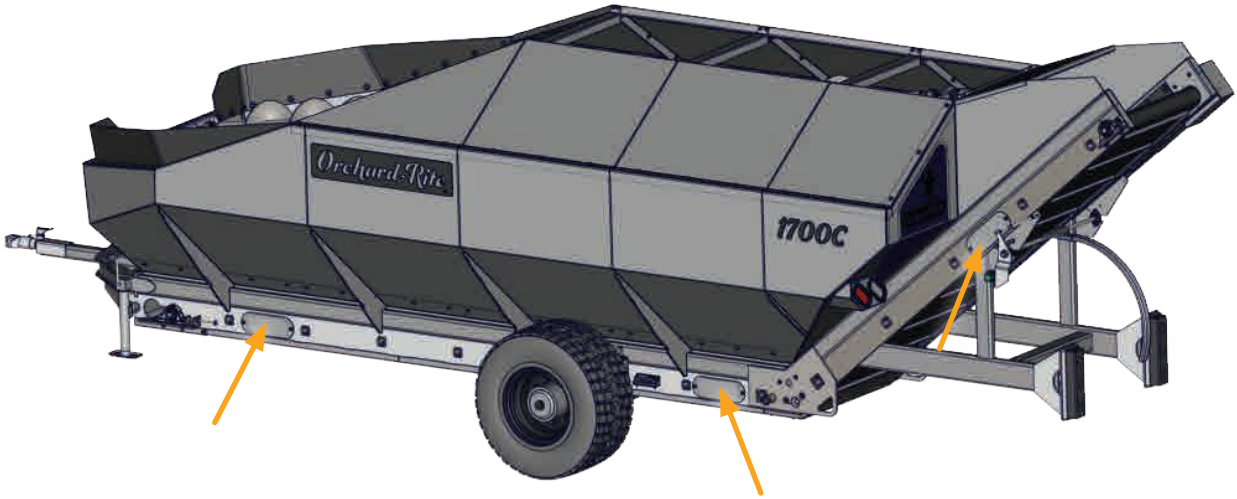

Left side of chassis behind the belt tensioning mechanism.

Left side of chassis to the rear of the wheel mount.

Rear conveyor channel on the left side directly above the proximity switch.

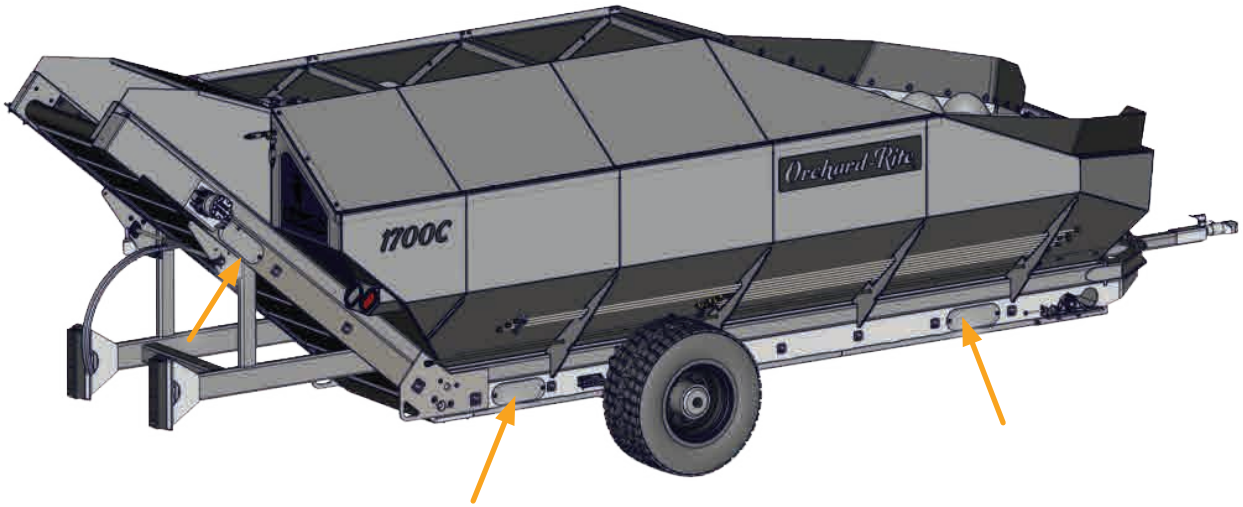

Rear conveyor channel on the right side below the conveyor motor and belt tensioning mechanism.

Right side of chassis to the rear of the wheel mount.

Right side of chassis behind the belt tensioning mechanism.

ORCHARD-RITE®, 1700C, and Two-Piece Receiver are trademarks of Orchard-Rite® Ltd., Inc.
All Rights Reserved.

Part No. 139512 Rev 1.0

Jack Placement and Tie Down Locations

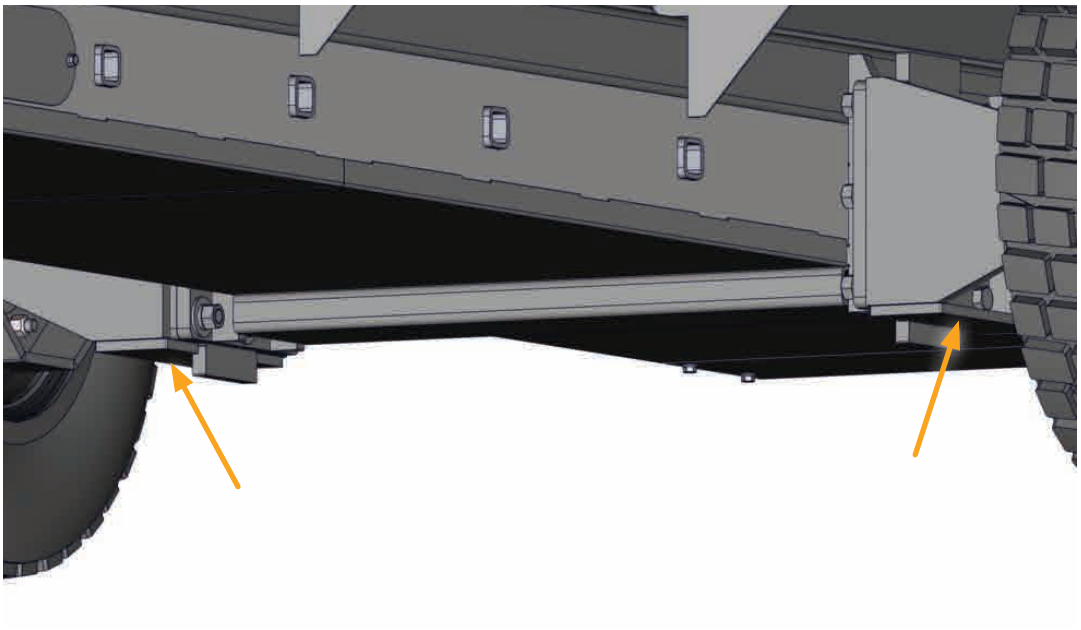

Jack Placement Locations

The jack placement location can be found on the wheel mount bracket as shown.

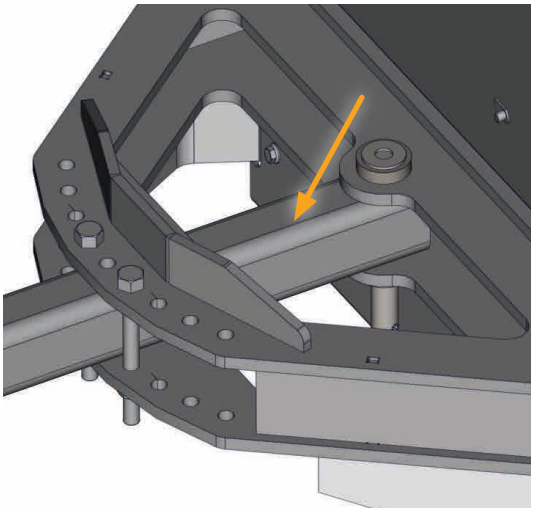

Front Tie Down

To tie down the front of the bulk cart during transport, loop a strap or chain through the holes and over the top of the hitch tongue where shown above.

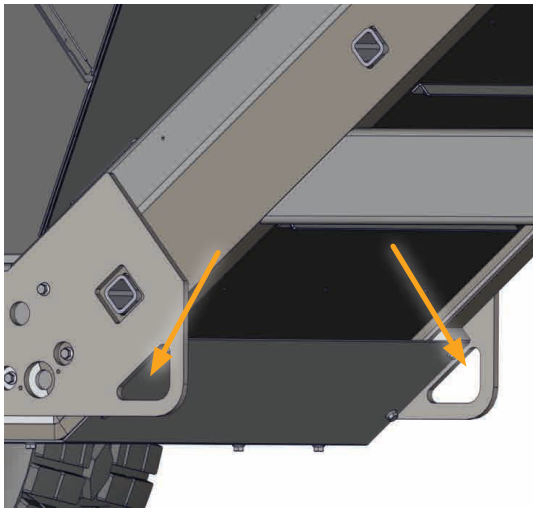

Rear Tie Downs

Cut-outs, as shown above, are provided on the rear of the bulk cart to attach tie downs for transport.

ORCHARD-RITE®, 1700C, and Two-Piece Receiver are trademarks of Orchard-Rite® Ltd., Inc.
All Rights Reserved.

Part No. 139512 Rev 1.0

Hook-Up Directions

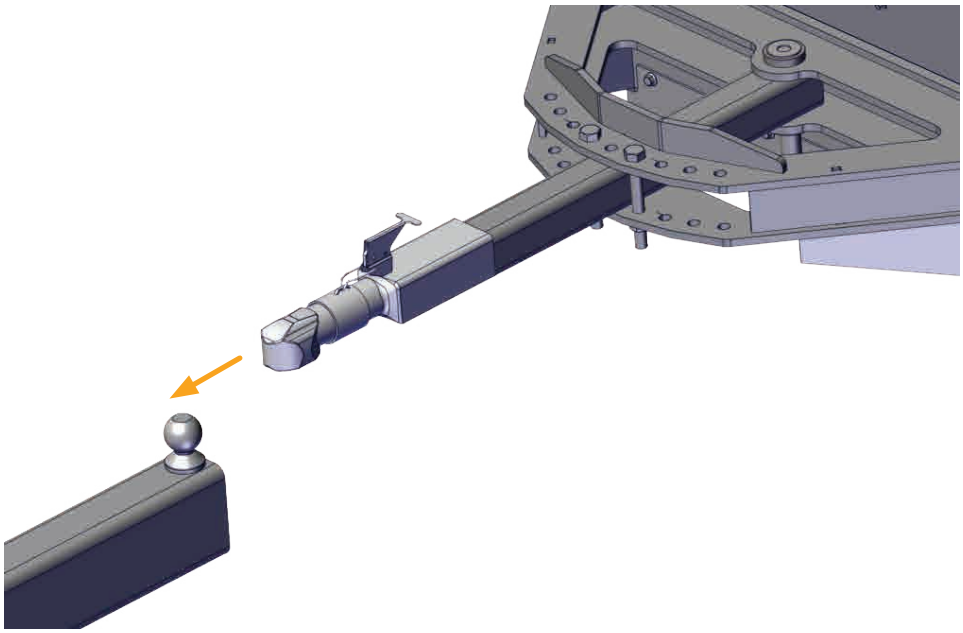

WARNING: Crush Hazard. Never stand or place any part of your body between the bulk cart and a moving towing vehicle or between the hitch and towing ball during any part of the hooking up process.

1. Adjust the tongue angle as necessary to place the bulk cart in line with the towing vehicle's loading conveyor.
2. Connect hydraulic feeder lines as labeled to power the conveyor belt, augur screws, and drive hubs (if equipped).
3. Connect the electrical connector. **NOTICE:** This connector is wired specifically for use with the Orchard-Rite 1700R Side-By-Side Receiver and will require a custom adapter if used with any other machine or pick-up to ensure correct wiring setup.
4. Verify that the coupling is fully engaged and locked before towing.
5. Rotate the jack from vertical to horizontal to prevent it from catching or dragging.

*Chock wheels before unhitching on any angled or non-level surface.

ORCHARD-RITE®, 1700C, and Two-Piece Receiver are trademarks of Orchard-Rite® Ltd., Inc.
All Rights Reserved.

Hydraulic Hose Connections

When connecting hydraulic supply lines from the towing vehicle to the bulk cart, use the diagram and list below. Failure to properly connect hoses will result in malfunctions and possible damage to the bulk cart. Ensure all connections are secure and stand clear of any hydraulic lines before pressurizing the system.

WARNING: HIGH PRESSURE HYDRAULIC FLUID. Relieve Pressure before servicing lines, check for leaks with cardboard (never your hands), and get immediate medical attention if fluid is injected.

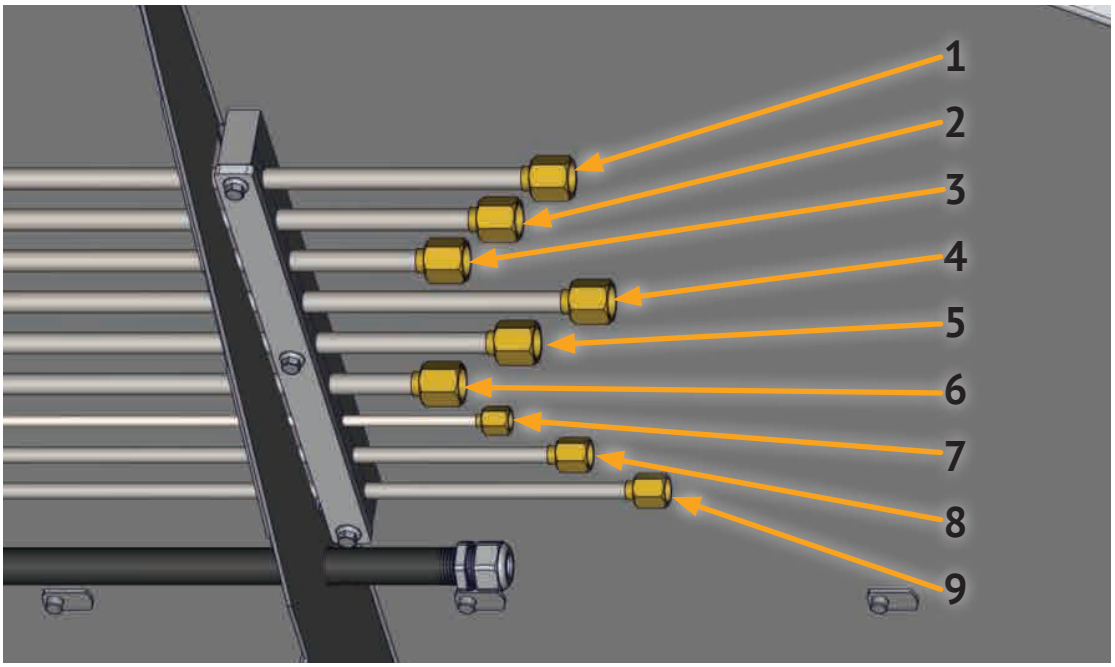

1. Conveyor Pressure
2. Tank (Conveyor / Auger Return)
3. Auger Pressure
4. Propulsion - Reverse
5. Propulsion - Forward
6. Case Drain
7. Two-Speed
8. Steering Cylinder - Extend (Turn Right)
9. Steering Cylinder - Retract (Turn Left)

Depending on the bulk cart's configuration, the number of required hydraulic supply lines will vary from three (3) to nine (9) as shown in the chart below.

Configuration	Hydraulic Connection Number								
	1	2	3	4	5	6	7	8	9
Base Model	✓	✓	✓						
Powered Wheels	✓	✓	✓	✓	✓	✓	✓		
Powered Wheels & Steering	✓	✓	✓	✓	✓	✓	✓	✓	✓

ORCHARD-RITE®, 1700C, and Two-Piece Receiver are trademarks of Orchard-Rite® Ltd., Inc.
All Rights Reserved.

Offloading Directions

The bulk cart is equipped with a contact-activated offloading conveyor for quick and convenient bankout operations. During bankout, keep all persons clear of the conveyor and discharge area until offloading is complete. ⚠**WARNING:** The conveyor will activate and begin unloading AUTOMATICALLY when the bankout contacts the activation lever - before the bankout reaches the bumpers. It is important to continue to approach the cart until contact is made with the bumpers to ensure all cart contents are successfully transferred to the bankout.

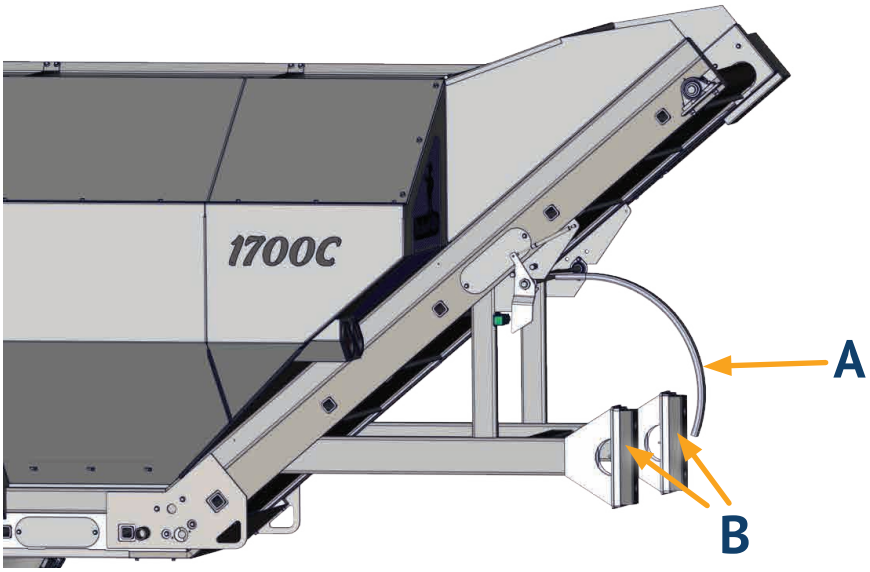

1. Bring the bankout to the back of the machine.
2. Approach the rear of the bulk cart so that the bankout makes contact with the activation lever (marked A in the image above).
3. Continue approaching the bulk cart until contact is made with the rubber bumpers on the back of the cart (B in the image above).
4. When complete, the bankout can be separated from the cart and the conveyor will deactivate automatically once the switch is released.

ORCHARD-RITE®, 1700C, and Two-Piece Receiver are trademarks of Orchard-Rite® Ltd., Inc.
All Rights Reserved.

Drive and Steering Variants

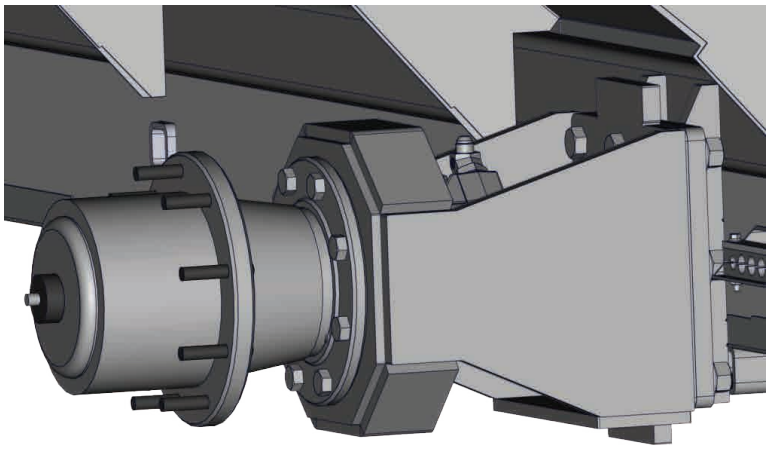

Power Assist Drive Hubs

Bulk Cart can be fitted with drive hubs to provide extra propulsion.

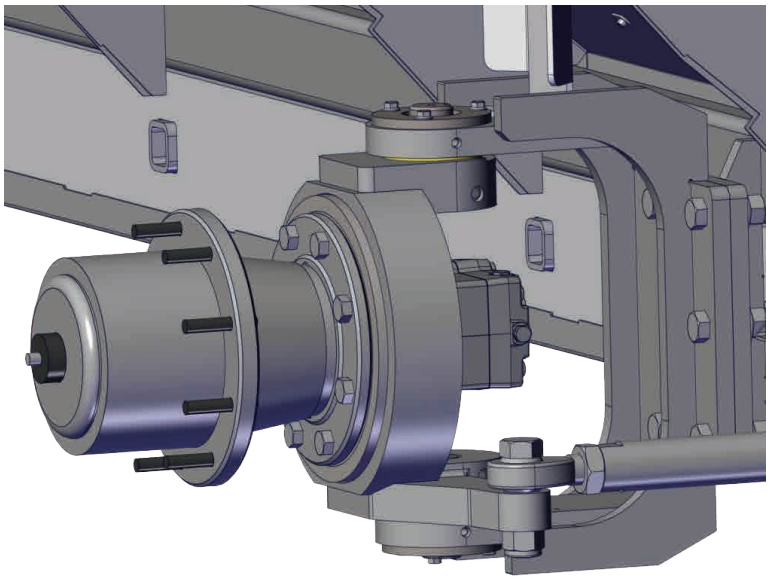

Steerable Drive Hubs

Steerable drive hub variant provides extra control and a tighter turning radius for navigating narrow spaces. For steering controls, consult the joystick controls section of the Orchard-Rite© 1700R Two-Piece Receiver.

Steering Hubs add 4 additional grease locations. One on the top and bottom of each steering mount.

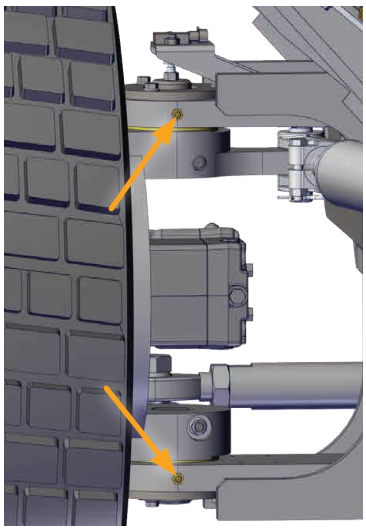

Grease Locations - Right

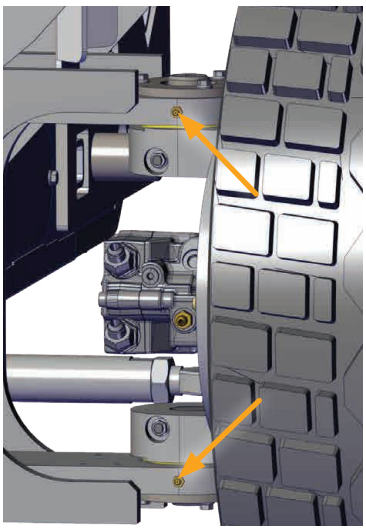

Grease Locations - Left

ORCHARD-RITE®, 1700C, and Two-Piece Receiver are trademarks of Orchard-Rite® Ltd., Inc.
All Rights Reserved.

Part No. 139512 Rev 1.0

Drive Hub Configurations for Drive or Tow



Auburn Gear® Drive Hub
Drive Configuration:
Center post extended.



Auburn Gear® Drive Hub
Tow/Free Wheel Configuration:
Center post pushed in.

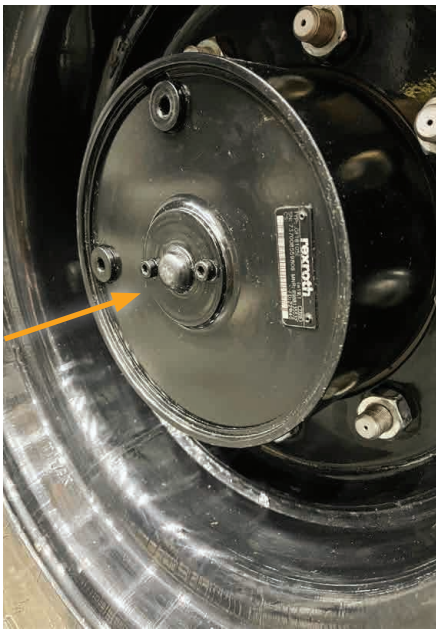

Rexroth® Drive Hub
Drive Configuration:
Indentation facing out.

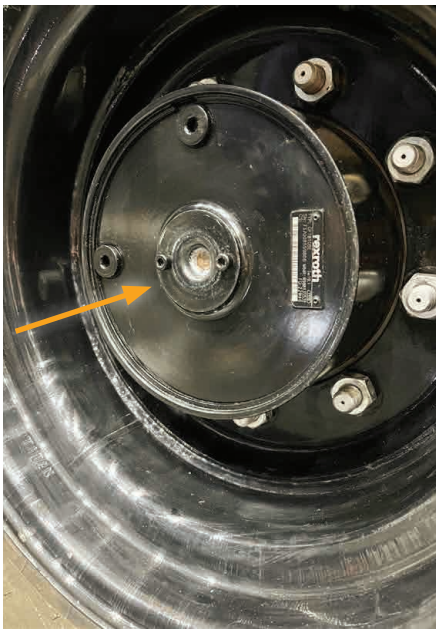

Rexroth® Drive Hub
Tow/Free Wheel Configuration:
Indentation facing in
(remove screws to flip plate,
replace screws).

ORCHARD-RITE®, 1700C, and Two-Piece Receiver are trademarks of Orchard-Rite® Ltd., Inc.
All Rights Reserved.

Part No. 139512 Rev 1.0

California Proposition 65 Warning

⚠ **WARNING:** This product can expose you to chemicals including lead, which is known to the State of California to cause cancer and birth defects or other reproductive harm.

For more information go to: www.p65warnings.ca.gov

Trademark and Copyright Notice

Orchard-Rite Ltd., Inc.'s name or other trademarks, service marks, logos or symbols **MAY NOT BE USED** in any advertisement, publication, online or otherwise, without Orchard-Rite Ltd., Inc.'s prior written approval, unless authorized under applicable law and at the user's own risk of compliance with all aspects of applicable law.

All users of this manual acknowledge that, at its discretion, Orchard-Rite Ltd., Inc. may revise the terms, content and materials in this manual at any time and without any notice to users. Specifications and illustrations in this manual are for identification purposes only and are subject to change without notice.

Caterpillar® is a registered trademark of Caterpillar, Inc.
Rexroth® is a product of Bosch Rexroth Corporation
Auburn Gear® is a product of Auburn Gear, LLC.



ORCHARD-RITE®, 1700C, and Two-Piece Receiver are trademarks of Orchard-Rite® Ltd., Inc.
All Rights Reserved.