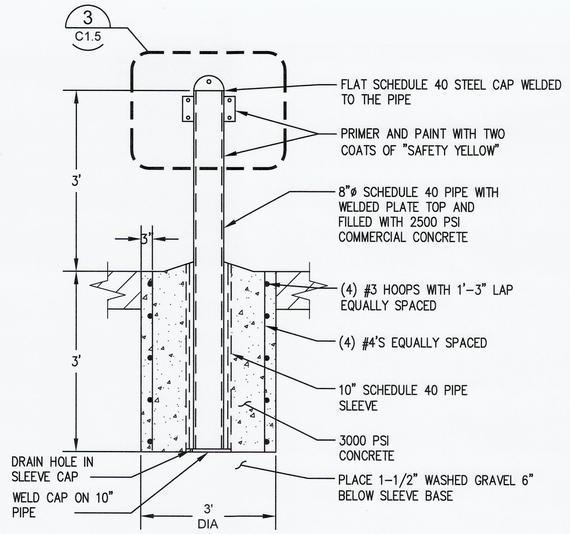

1 C1.3 REMOVABLE TRAFFIC BOLLARD WITH BOLTED GUARD RAIL

NTS

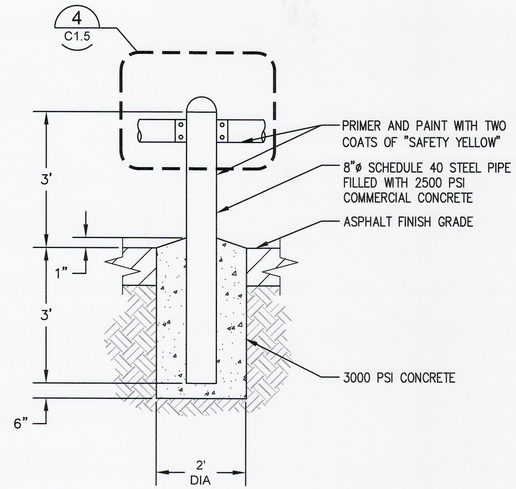

2 C1.3 3' FIXED TRAFFIC BOLLARD WITH BOLTED GUARD RAIL

NTS

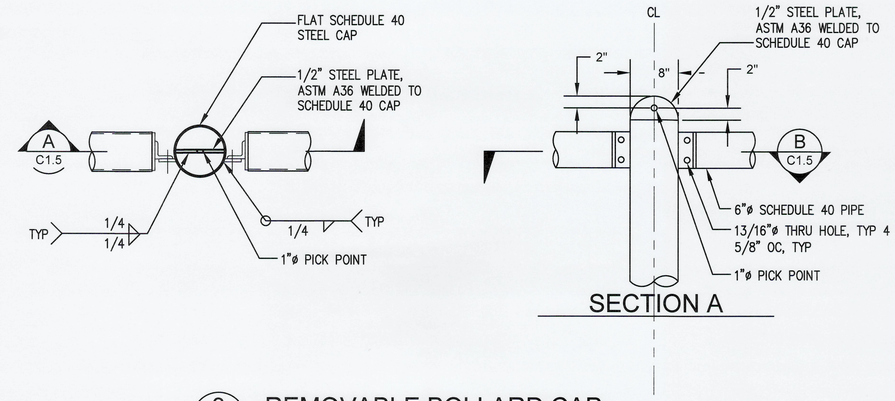

3 C1.3 REMOVABLE BOLLARD CAP

NTS

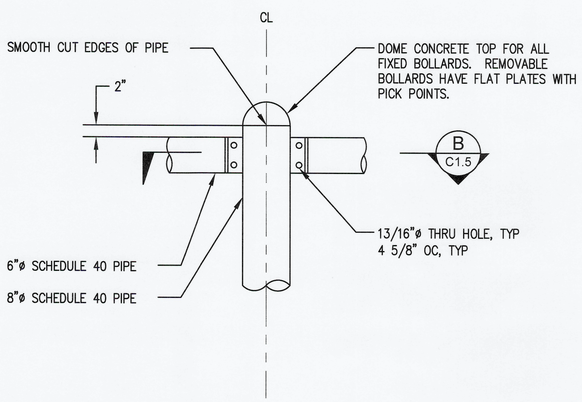

4 C1.5 BOLTED GUARD RAIL

NTS

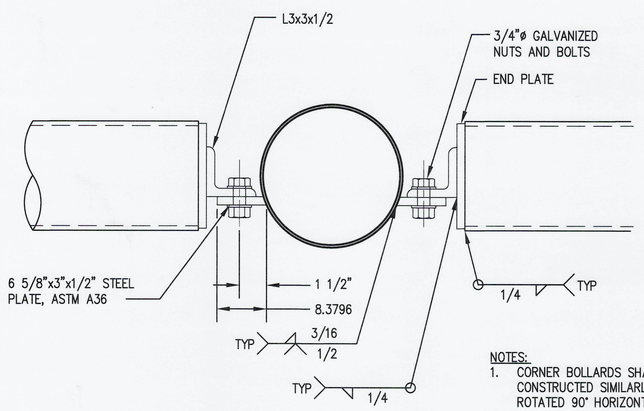

NOTES:

1. CORNER BOLLARDS SHALL HAVE GUARD RAILS CONSTRUCTED SIMILARLY BUT HAVE ONE RAIL ROTATED 90° HORIZONTALLY.

B C1.5 BOLTED GUARD RAIL SECTION

NTS

BINDING EDGE

PORT OF TACOMA FILE: X:\TAC\2020\2000070 POT EB1 Paving & Restroom\KPFF Design\Drawings\C1.3-C1.4

Port of Tacoma
P.O. BOX 1837 TACOMA, WA 98401 (253)383-5841

kpff
2407 North 31st Street, Suite 100
Tacoma, Washington 98407
(253) 396-0150 Fax (253) 396-0162

MARK:	REVISION:	BY:	APPR:	DATE:

12/4/23

	TJH	11/21/2023
	CHECKED BY	DATE
	SEK	11/21/2023
	PROJ. ENGR	DATE

APPROVED: 12/13/23
DIRECTOR ENG. DATE

PRINTED BY: thelbig Nov 21, 2023
PORT ADDRESS: ONE SITCUM PLAZA TACOMA WA, 98401-1837

6695

C1.5

16 OF 26

EB-1 PAVEMENT AND RESTROOM BUILDINGS

SITE FEATURE DETAILS

CONT/CONS: 071907	TOWNSHIP: 21N	RANGE: 3E	SECTION: 36
M. ID: 201105.01	DAT-HRZ: W83-SF	VERT: PORT OF TACOMA BM#	
PHASE: BID SET	PARCEL: 0321354035	DRAWING SCALE: AS SHOWN	

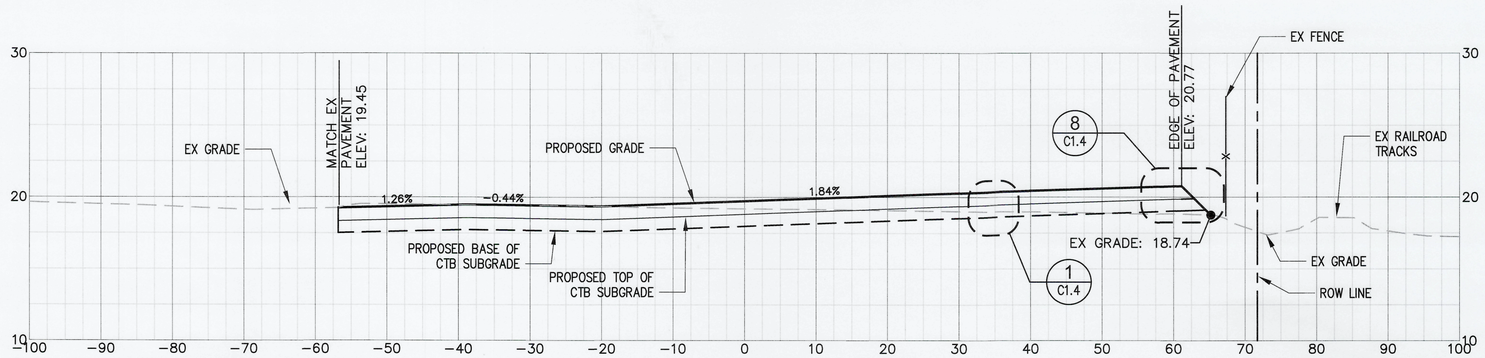

A C1.1 **SITE SECTION**
SCALE: HORZ 1:10, VERT 1:5

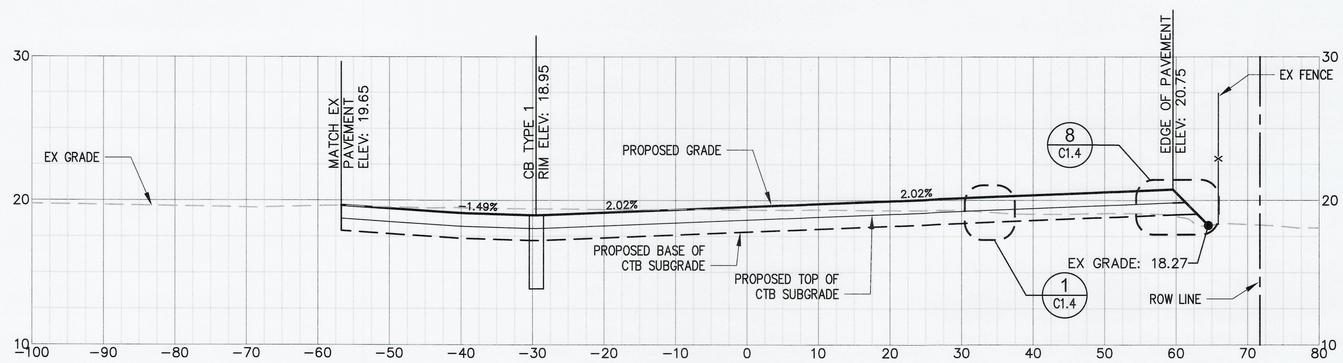

B C1.1 **SITE SECTION**
SCALE: HORZ 1:10, VERT 1:5

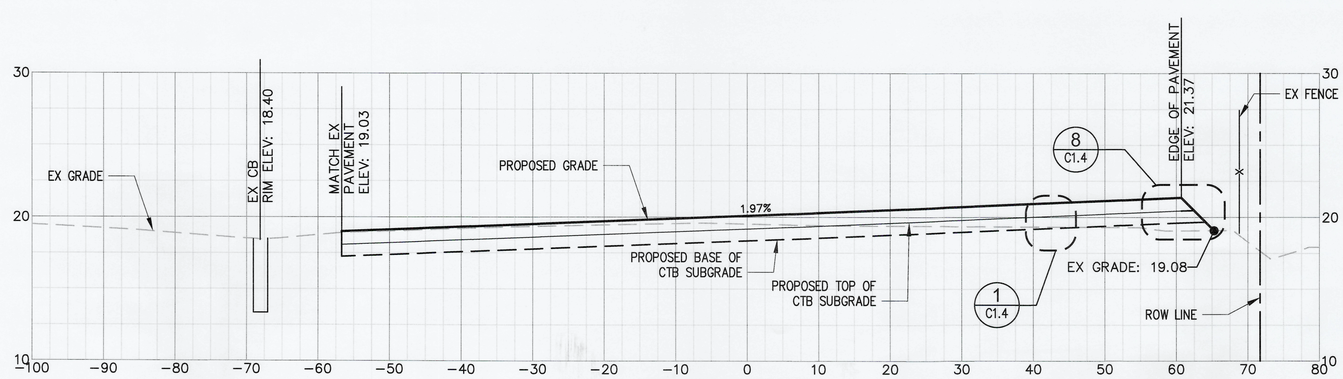

C C1.0 **SITE SECTION**
SCALE: HORZ 1:10, VERT 1:5

BINDING EDGE

PORT OF TACOMA FILE: X:\TAC\2020\2000070 POT EB1 Paving & Restroom\KPFF Design\Drawings\C1.3-C1.4

kpff
2407 North 31st Street, Suite 100
Tacoma, Washington 98403
(253) 396-0150 Fax (253) 396-0152

Port of Tacoma
P.O. BOX 1837 TACOMA, WA 98401 (253)383-5841

MARK:	REVISION:	BY:	APPR:	DATE:
1	COT SDEV REV 1	ECM		

12/4/23

TJH	11/21/2023	
CHECKED BY	DATE	
SEK	11/21/2023	
PROJ. ENGR	DATE	
PRINTED BY: thelbig Nov 21, 2023		
PORT ADDRESS: ONE SITCUM PLAZA		
TACOMA WA, 98401-1837		

APPROVED: 12/13/23
DIRECTOR ENG. DATE

6695

C1.6

17 OF 26

EB-1 PAVEMENT AND RESTROOM BUILDINGS

SITE SECTIONS

CONT/CONS:	071907	TOWNSHIP: 21N	RANGE: 3E
M. ID:	201105.01	DAT-HRZ: W83-SF	VERT: PORT OF TACOMA BM#
PHASE:	BID SET	PARCEL: 0321354035	DRAWING SCALE: AS SHOWN

SECTION: 36

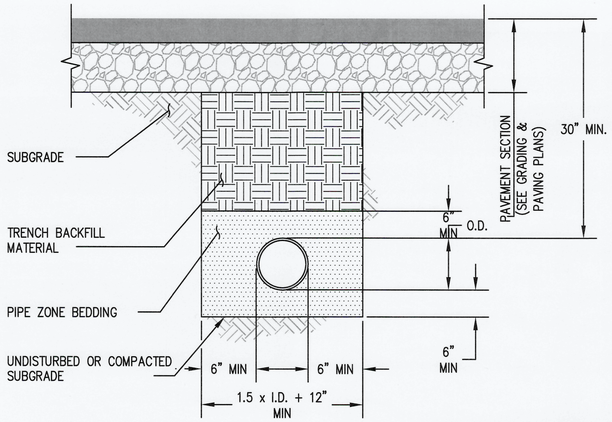

NOTES:

1. CONTRACTOR SHALL PROVIDE DEWATERING SYSTEMS AS REQUIRED DURING PIPE INSTALLATIONS.
2. SEWER PIPE WITHIN THE CITY ROW SHALL BE INSTALLED PER CITY OF TACOMA SU-16. SEE WO DRAWINGS FOR SEWER INSTALLATION WITHIN THE CITY ROW.

1 WATER AND SEWER PIPE BEDDING
C1.7 NTS

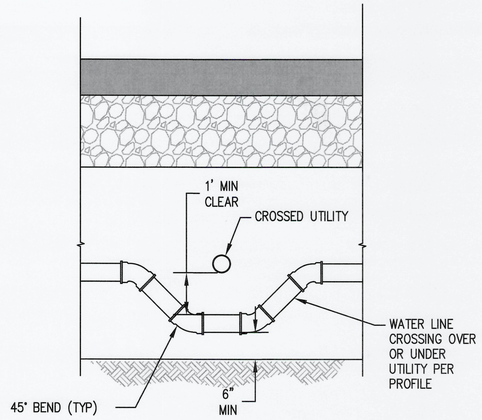

2 UTILITY CROSSING
C1.7 NTS

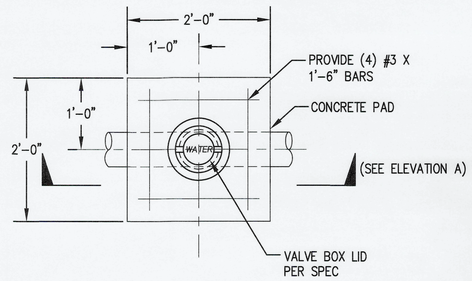

PLAN

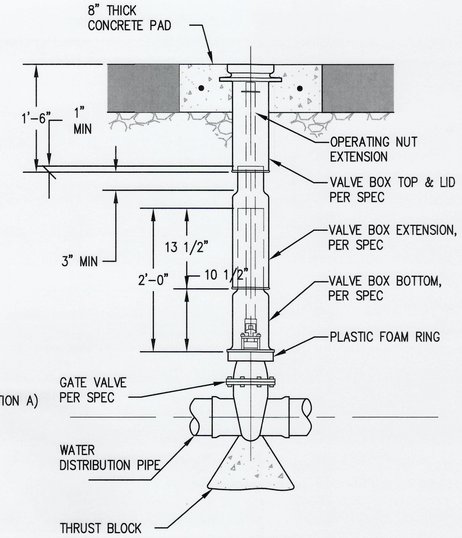

ELEVATION A

3 GATE VALVE/VALVE BOX
C1.7 NTS

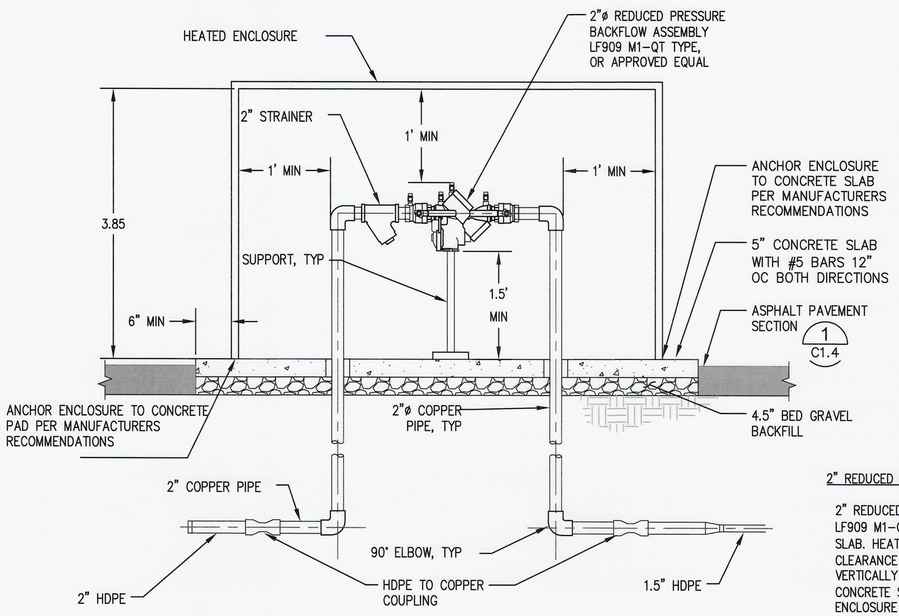

SECTION B

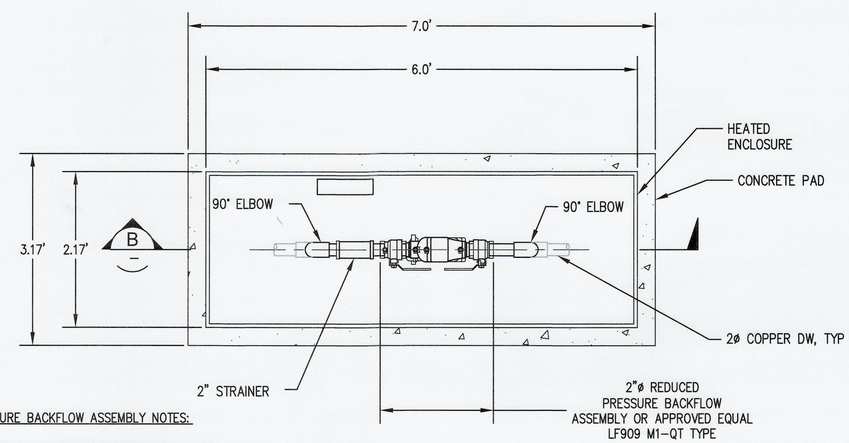

PLAN

2" REDUCED PRESSURE BACKFLOW ASSEMBLY NOTES:

2" REDUCED PRESSURE BACKFLOW ASSEMBLY SHALL BE LF909 M1-QT AND SHALL BE 1.5' MIN ABOVE CONCRETE SLAB. HEATED ENCLOSURE SHALL HAVE 1' MIN CLEARANCE HORIZONTALLY AND 1' MIN CLEARANCE VERTICALLY FROM BACKFLOW ASSEMBLY AND PIPES. CONCRETE SLAB SHALL PROVIDE 6" FROM HEATED ENCLOSURE TO EDGE OF SLAB.

4 2" Ø REDUCED PRESSURE BACKFLOW ASSEMBLY
C1.3 NTS

BINDING EDGE

PORT OF TACOMA FILE: X:\TAC\2020\2000070 POT EB1 Paving & Restroom\KPFF Design\Drawings\C1.9

Port of Tacoma
P.O. BOX 1837 TACOMA, WA 98401 (253)383-5841

kpff
2407 North 31st Street, Suite 100
Tacoma, Washington 98407
(253) 396-0150 Fax (253) 396-0162

MARK:	REVISION:	BY:	APPR:	DATE:

WADE R. NICKLE STATE OF WASHINGTON REGISTERED PROFESSIONAL ENGINEER 12/4/23

TJH	11/21/2023	
CHECKED BY	DATE	
SEK	11/21/2023	
PROJ. ENGR	DATE	

APPROVED: 12/13/23
DIRECTOR ENG. DATE
PRINTED BY: thelbig Nov 21, 2023
PORT ADDRESS: ONE SITCUM PLAZA TACOMA WA, 98401-1837

EB-1 PAVEMENT AND RESTROOM BUILDINGS

UTILITY DETAILS

TOWNSHIP: 21N	RANGE: 3E	SECTION: 36	
DAT-HRZ: W83-SF	VERT: PORT OF TACOMA BM#		
PARCEL: 0321354035	DRAWING SCALE: AS SHOWN		

6695

C1.7

18 OF 26

CONT/CONS:	071907
M. ID:	201105.01
PHASE:	BID SET

MANHOLE DIMENSIONS TABLE				
DIA	MIN WALL THICKNESS	MIN BASE THICKNESS	MAX KNOCKOUT SIZE	MIN DIST BETWEEN KNOCKOUTS
48"	4"	6"	36"	8"
54"	4.5"	8"	42"	8"
60"	5"	8"	48"	8"

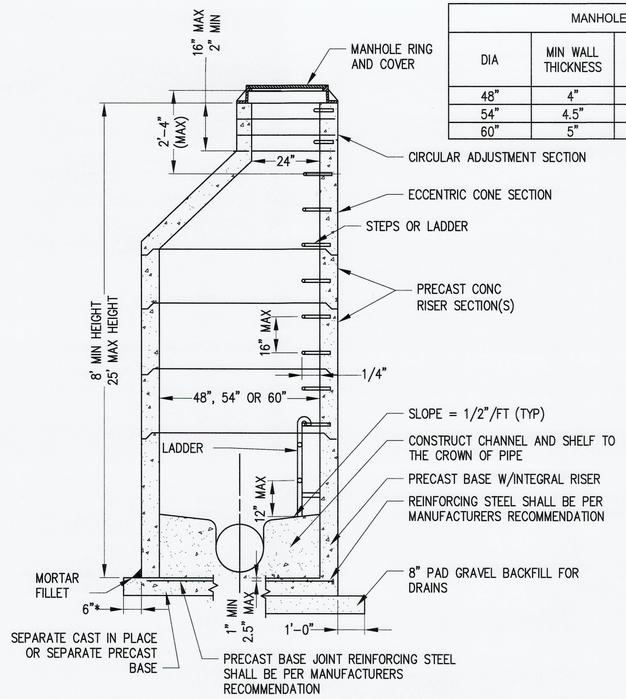

1 C1.2 SANITARY SEWER MANHOLE

NTS

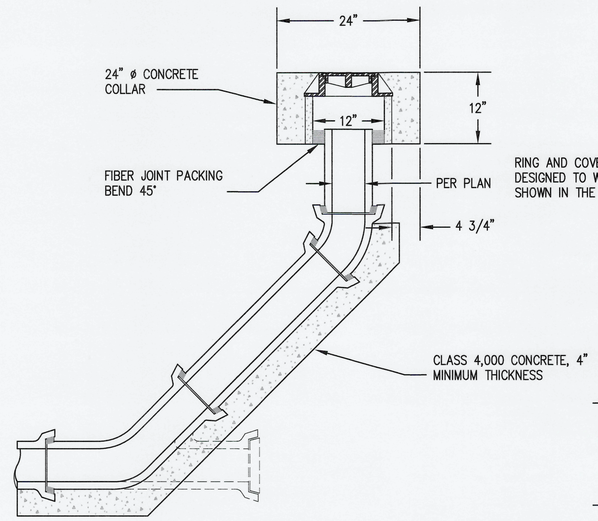

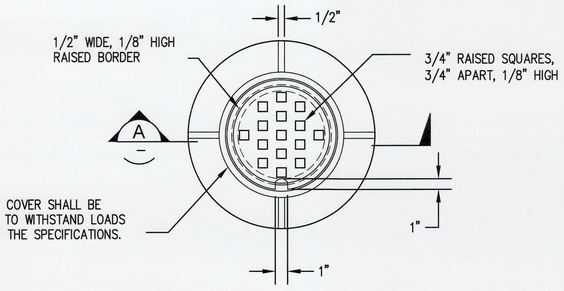

PLAN

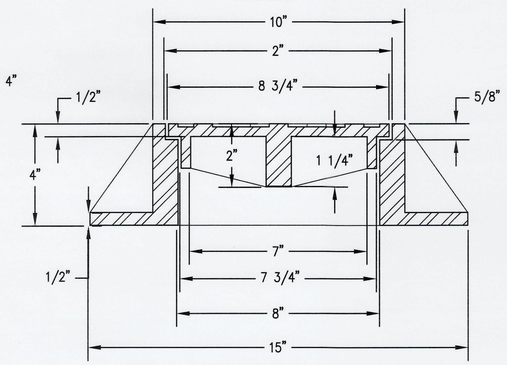

SECTION A

2 C1.3 SANITARY CLEANOUT

NTS

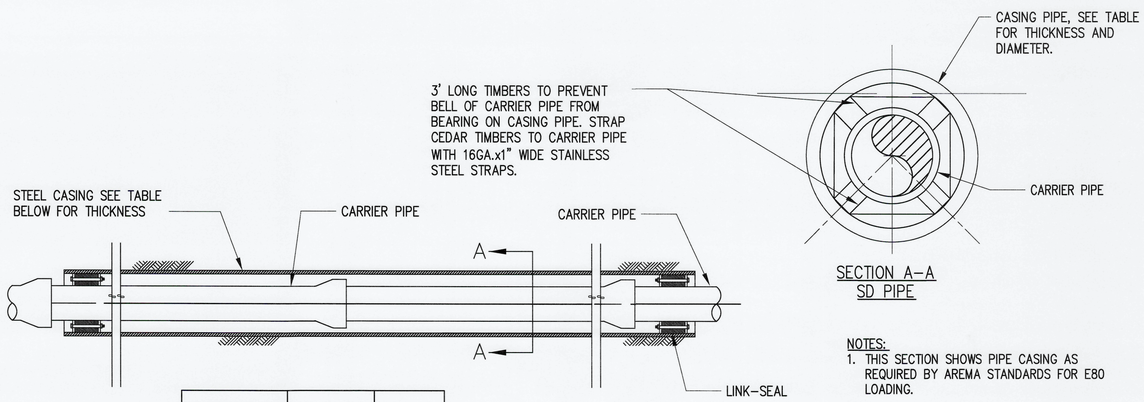

SECTION A–A
SD PIPE

CARRIER PIPE SIZE (NOMINAL)	CASING SIZE (NOMINAL)	LINK-SEAL SIZE NO.
1-1/4"	3-1/4"	LS-275-C
6"	10"	LS-475-C
8"	16"	LS-475-C
10"	18"	LS-400-C
12"	20"	LS-400-C
18"	30"	LS-500-C

MINIMUM THICKNESS FOR CASING PIPE	DIAMETER OF CASING PIPE
1/4" (0.25")	12" OR LESS
5/16" (0.3125")	OVER 12"-18"
11/32" (0.344")	20" & 22"

NOTES:
1. THIS SECTION SHOWS PIPE CASING AS REQUIRED BY AREMA STANDARDS FOR E80 LOADING.
2. CASING SHALL EXTEND 15' BEYOND THE CENTERLINE OF THE TRACKS.

CASING:
SIZE AND MINIMUM THICKNESS OF CASING SHALL BE AS SHOWN ON THE CONTRACT DRAWINGS. HOWEVER, THE CONTRACTOR SHALL BE RESPONSIBLE FOR SELECTING THE THICKNESS CONSISTENT WITH HIS OPERATION.

CASING SEAL:
MINIMUM 3/16" THICK, SHEET TYPE SYNTHETIC RUBBER WITH STAINLESS STEEL BANDS.

3 C1.3, C1.9 PIPE CASING

NTS

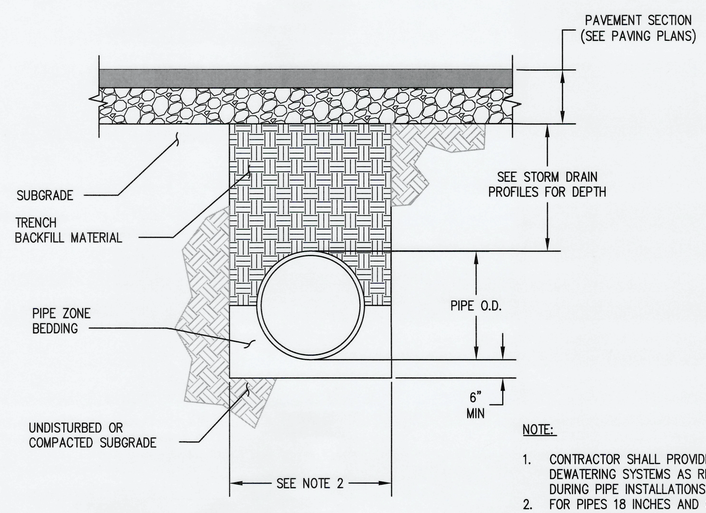

NOTE:
1. CONTRACTOR SHALL PROVIDE DEWATERING SYSTEMS AS REQUIRED DURING PIPE INSTALLATIONS.
2. FOR PIPES 18 INCHES AND OVER, TRENCH WIDTH = (1.5 x I.D.) + 18 INCHES.

4 C1.8 TYPICAL STORM DRAINAGE TRENCH DETAIL

NTS

Port of Tacoma
P.O. BOX 1837 TACOMA, WA 98401 (253)383-5841

kpff
2407 North 31st Street, Suite 100
Tacoma, Washington 98407
(253) 396-0150 Fax (253) 396-0162

MARK:	REVISION:	BY:	APPR:	DATE:

12/4/23

TJH	11/21/2023	
CHECKED BY	DATE	
SEK	11/21/2023	
PROJ. ENGR	DATE	
thelbig Nov 21, 2023		
PRINTED BY:		
PORT ADDRESS: ONE SITCUM PLAZA TACOMA WA, 98401-1837		

APPROVED: 12/8/23
DIRECTOR ENG. DATE

EB-1 PAVEMENT AND RESTROOM BUILDINGS

UTILITY DETAILS

TOWNSHIP: 21N	RANGE: 3E	SECTION: 36	
DAT-HRZ: W83-SF	VERT: PORT OF TACOMA BM#		
PARCEL: 0321354035	DRAWING SCALE: AS SHOWN		

6695

C1.8

19 OF 26

CONT/CONS:	071907
M. ID:	201105.01
PHASE:	BID SET

BINDING EDGE

PORT OF TACOMA FILE: X:\TAC\2020\2000070 POT EB1 Paving & Restroom\KPFF Design\Drawings\C1.9