PORT OF TACOMA

WEST SITCUM MAIN SUBSTATIONS REPLACEMENT

PROJECT NO. 201178.01
CONTRACT NO. PA000000140

PORT COMMISSIONERS:

JOHN McCARTHY
RICHARD MARZANO
DEANNA KELLER
DON MEYER
KRISTIN ANG

PORT STAFF:

ERIC JOHNSON
Executive Director

THAIS HOWARD, PE
Director of Engineering

KYLE SMITH, PE
Project Manager

CONSULTANT:

WSP USA Inc.
1201 PACIFIC AVE
Suite 500
TACOMA, WA 98402
TEL: (206) 431-2300
FAX: (206) 431-2250

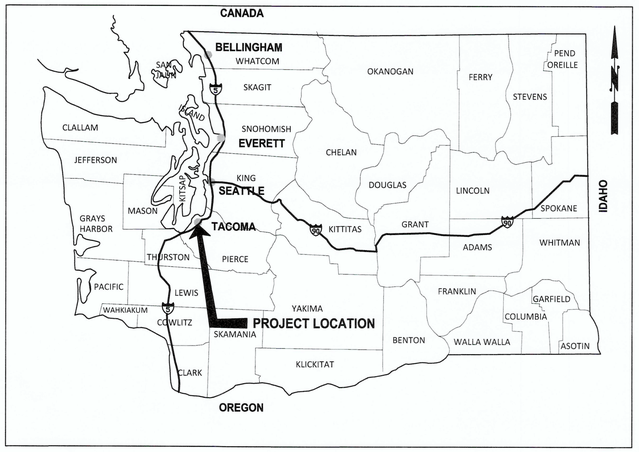

AREA MAP WASHINGTON

NO SCALE

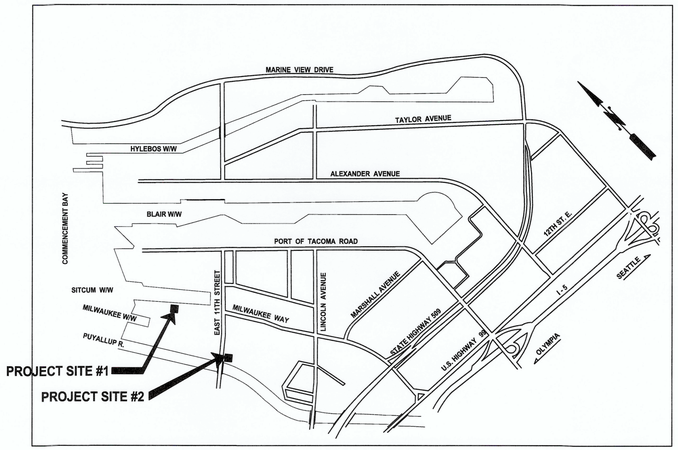

VICINITY MAP PORT OF TACOMA

NO SCALE

SHEET NO.	DRAWING NO.	DRAWING TITLE
		GENERAL
1	G1.0	COVER SHEET, AREA MAP, VICINITY MAP, & DRAWING LIST
2	G2.0	GENERAL NOTES, SYMBOLS, & ABBREVIATIONS
3	G3.0	SITE ACCESS PLAN - SUBSTATION #1
4	G3.1	SITE ACCESS PLAN - SUBSTATION #3
		SURVEY
5	V1.0	TOPOGRAPHIC SURVEY
6	V1.1	TOPOGRAPHIC SURVEY
		CIVIL
7	C2.0	DEMO & TESC PLAN - SUBSTATION #1
8	C2.1	DEMO & TESC PLAN - SUBSTATION #3
9	C3.0	SITE PLAN - SUBSTATION #1
10	C3.1	SITE PLAN - SUBSTATION #3
11	C4.0	TESC DETAILS & NOTES
12	C4.1	CIVIL DETAILS & SECTIONS - SHEET 1
13	C4.2	CIVIL DETAILS - SHEET 2
14	C4.3	CIVIL DETAILS - SHEET 3
15	C4.4	CIVIL DETAILS - SHEET 4
16	C5.0	PHOTOGRAPHS

SHEET NO.	DRAWING NO.	DRAWING TITLE
		ELECTRICAL
17	E1.0	ELECTRICAL SYMBOLS LEGEND
18	E2.0	OVERALL ELECTRICAL SITE PLAN
19	E2.1	PARTIAL ELECTRICAL SITE PLAN - SUBSTATION #1
20	E2.2	PARTIAL ELECTRICAL SITE PLAN - SUBSTATION #3
21	E3.0	SUBSTATION #1 ELECTRICAL LAYOUT
22	E3.1	SUBSTATION #3 ELECTRICAL LAYOUT
23	E4.0	POWER RISER DIAGRAM - SUBSTATION #1
24	E4.1	POWER RISER DIAGRAM - SUBSTATION #3
25	E4.2	PANEL SCHEDULES
26	E5.0	ELECTRICAL DETAILS
27	E5.1	ELECTRICAL DETAILS
28	E6.0	CONDUIT AND CONDUCTOR SCHEDULE

FOR BID

G1.0
1 OF 28

PORT OF TACOMA
WEST SITCUM MAIN SUBSTATIONS REPLACEMENT
COVER SHEET, AREA MAP, VINCINITY MAP & DRAWING LIST

CONT/CONS: PA000000140 | TOWNSHIP: 21 | RANGE: 3 | SECTION: 34
M. ID: 201178.01 | DAT-HRZ: NAD 83-07 | VERT: NOS TIDAL (MLLW=0.0)
PHASE: 100% DESIGN SUBMITTAL | PARCEL: | DRAWING SCALE: AS SHOWN

APPROVED: CE 8/26/25
CHKD/ATE CHECKED BY DATE
DIRECTOR ENG. DATE JV 8/26/25
PROJ. ENGR DATE
PRINTED BY: USSM133814 Oct 30, 2025
PORT ADDRESS: 1675 W LINCOLN AVE.
TACOMA, WA 98421-2300

WSP USA Inc.
1201 Pacific Avenue
Suite 500
Tacoma, WA 98402
TEL: (206) 431-2300
FAX: (206) 431-2250

MARK:	REVISION:	BY:	APPR:	DATE:

Port of Tacoma
P.O. BOX 1837 TACOMA, WA 98401 (253)383-5841

BINDING EDGE

PORT OF TACOMA FILE: C:\Users\USSM133814\WSP O365\NW Maritime Projects - Projects\30902693\004\CADD\Dwgs\01_G01-00

BINDING EDGE

GENERAL NOTES:

1. THESE NOTES CONTAIN GENERAL INFORMATION AND ARE NOT NECESSARILY COMPLETE FOR CONSTRUCTION PURPOSES. THE CONTRACTOR SHALL VERIFY INFORMATION SHOWN ON THE DRAWINGS, IN THE SPECIFICATIONS AND OTHER DOCUMENTS, AND BRING ANY CONFLICTS TO THE ATTENTION OF THE ENGINEER BEFORE BEGINNING THE AFFECTED WORK. THE ENGINEER WILL RESOLVE ANY SUCH CONFLICTS.

2. THE TERMINAL WILL BE OPERATIONAL 24 HOURS, 7 DAYS A WEEK. THE CONTRACTOR SHALL KEEP ITS WORKERS, MATERIAL, AND EQUIPMENT CLEAR OF ALL SHIPPING AND CONTAINER HANDLING OPERATIONS AND SHALL NOT IN ANY WAY HINDER OR DISRUPT TERMINAL OPERATIONS. CONTRACTOR SHALL HAVE CONTINUOUS COORDINATION WITH THE PORT. SEE G3.0 AND G3.1 FOR SITE ACCESS.

3. PROJECT DATUM AND SURVEY CONTROL: REFER TO DWGS V1.0 AND V1.1 FOR PROJECT DATUM AND SURVEY CONTROL. THE CONTRACTOR SHALL PERFORM ALL REQUIRED SURVEYING AND STAKING REQUIRED DURING CONSTRUCTION.

4. LOCATIONS OF EXISTING UTILITIES SHOWN HEREIN HAVE BEEN OBTAINED FROM AVAILABLE RECORDS AND SHOULD BE CONSIDERED APPROXIMATE ONLY AND NOT NECESSARILY COMPLETE. IT IS THE SOLE RESPONSIBILITY OF THE CONTRACTOR TO INDEPENDENTLY VERIFY THE ACCURACY OF ALL UTILITY LOCATIONS SHOWN, INCLUDING PERFORMING A UTILITY LOCATE, AND TO FURTHER DISCOVER AND AVOID ANY OTHER UTILITIES NOT SHOWN HEREON WHICH MAY BE AFFECTED BY THE IMPLEMENTATION OF THESE PLANS. INFORM THE ENGINEER OF ANY POTENTIAL CONFLICTS OR INTERFERENCES FOR RESOLUTION PRIOR TO PERFORMING EXCAVATIONS.

5. THE CONTRACTOR SHALL PROVIDE AND MAINTAIN TEMPORARY SEDIMENTATION AND EROSION CONTROL (TESC) FACILITIES. REFER TO THE APPLICABLE DRAWINGS AND THE SPECIFICATIONS FOR REQUIRED TESC FEATURES. PRIOR TO COMMENCING DEMOLITION OPERATIONS, IMPLEMENT EROSION AND SEDIMENT CONTROL PLAN SUBMITTED BY THE CONTRACTOR AND APPROVED BY THE PORT. THE CONTRACTOR SHALL ALSO SUBMIT A SWPPP TO THE PORT FOR APPROVAL.

6. AS CONSTRUCTION PROGRESSES AND SEASONAL CONDITIONS DICTATE, THE CONTRACTOR SHALL REVISE TESC FACILITIES AND CONFIGURATIONS AS NECESSARY TO ENSURE COMPLETE SILTATION CONTROL AND THAT NO SEDIMENT LADEN WATER ENTERS THE NATURAL OR PIPED DRAINAGE SYSTEM.

7. DURING THE COURSE OF CONSTRUCTION, IT SHALL BE THE OBLIGATION AND RESPONSIBILITY OF THE CONTRACTOR TO ADDRESS ANY NEW CONDITIONS THAT MAY BE CREATED BY ITS ACTIVITIES AND TO PROVIDE ADDITIONAL TESC FACILITIES THAT MAY BE NEEDED TO PROTECT THE SITE, ADJACENT LAND AND EXISTING DRAINAGE FEATURES. REMOVE TESC FACILITIES AT COMPLETION OF THE PROJECT.

8. THE CONTRACTOR SHALL KEEP ALL ON-SITE PROJECT AREAS CLEAN AT ALL TIMES BY SWEEPING. WASHING AND/OR USE OF A WATER TRUCK TO CLEAN PAVED AREAS ARE/IS NOT ALLOWED.

9. ANY DAMAGE INCURRED TO ANY PART OF THE SITE OR BOUNDARY NOT SPECIFICALLY DESIGNATED FOR DEMOLITION SHALL BE REPAIRED, REPLACED, AND/OR RECONSTRUCTED BY THE CONTRACTOR, AT THE CONTRACTOR'S EXPENSE, TO THE PREDISTURBED CONDITION AS DIRECTED BY THE ENGINEER.

10. EXCESS SOIL SHALL BE TEMPORARILY STOCKPILED OUTSIDE OF TERMINAL WORK AREA. EXACT LOCATION TO BE WITHIN TERMINAL BOUNDARY AND AS DIRECTED BY ENGINEER. PORT WILL SAMPLE AND TEST MATERIAL PRIOR TO CONTRACTOR HAULING OFFSITE FOR DISPOSAL AT AN APPROVED FACILITY. CONTRACTOR SHALL DISPOSE OF EXCESS OR GEOTECHNICALLY UNSUITABLE MATERIALS AS INDICATED IN THE SPECIFICATIONS.

11. ALL DEMOLITION MATERIAL, INCLUDING PAVEMENT, AND EXCESS SOIL, EXCEPT AS NOTED AND/OR SPECIFIED, SHALL BECOME THE PROPERTY OF THE CONTRACTOR AND BE COMPLETELY REMOVED AND DISPOSED OF BY THE CONTRACTOR. AS SPECIFIED IN THE CONTRACT DOCUMENTS.

12. CONTRACTOR AREAS FOR STAGING, LAYDOWN, STORAGE OF MATERIALS AND EQUIPMENT SHALL BE COORDINATED WITH THE ENGINEER. SEE G3.0 AND G3.1 FOR SITE ACCESS AND STAGING AREAS.

13. THE CONTRACTOR SHALL BE SOLELY RESPONSIBLE FOR DETERMINING THE ADEQUACY OF EXISTING STRUCTURES AND UTILITIES TO SUPPORT CONSTRUCTION EQUIPMENT AND LOADS.

14. THE CONTRACTOR SHALL BE RESPONSIBLE FOR AND SHALL INSTALL AND MAINTAIN SHORING AND BRACING NECESSARY TO PROTECT WORKERS, UTILITIES ADJACENT TO EXISTING PAVEMENT AND OTHER IMPROVEMENTS AND EXCAVATIONS. SHORING MUST BE IN ACCORDANCE WITH WAC CHAPTER 296-155, INCLUDING CHAPTER N. THE CONTRACTOR SHALL ALSO BE RESPONSIBLE FOR REMOVAL OF TEMPORARY SHORING AND BRACING.

15. ALL DEVIATIONS FROM THESE PLANS SHALL BE RECORDED BY REDLINE MARKUPS ON A SET OF "AS-BUILT" DRAWINGS. THE CONTRACTOR SHALL SUBMIT "AS-BUILT" DRAWINGS TO THE ENGINEER IN ACCORDANCE WITH THE SPECIFICATIONS, SEE SECTION 01 70 00, EXECUTION AND CLOSEOUT REQUIREMENTS.

16. CONTRACTOR IS REQUIRED TO FIELD VERIFY EXISTING CONDITIONS, INCLUDING DIMENSIONS AND ELEVATIONS SHOWN ON DRAWINGS, PRIOR TO PROCUREMENT OF ALL MATERIALS TO ENSURE IMPROVEMENTS ARE SIZED AND CONFIGURED ACCURATELY FOR SITE CONDITIONS.

UTILITY STRUCTURE DESIGN LOADS:

1. FRAMES AND GRATES

1.1. FRAME AND GRATE SHALL BE DESIGNED AND TESTED FOR A FAA AIRPORT WHEEL PROOF LOAD OF 200,000 LB APPLIED OVER 9 INCH SQUARE AREA (2,469 PSI) IN ACCORDANCE WITH AASHTO M 306. PROOF LOAD SHALL BE HELD FOR A MINIMUM DURATION OF ONE MINUTE. AFTER TEST, THE FRAME AND COVER / GRATING ARE INSPECTED. THERE SHALL BE NO SIGNS OF CRACKING OR DETRIMENTAL PERMANENT DEFORMATION. PROOF LOAD INCLUDES AASHTO SAFETY FACTOR OF 2.5, CORRESPONDING TO AN ACTUAL WHEEL LOAD OF 80,000 LBS (VEHICLES AND/OR EQUIPMENT WITH 160,000 LB AXLE LOAD). CASTINGS RATED FOR H-20 AND HS-20 LOADS ARE NOT ACCEPTABLE.

2. MANHOLES / VAULTS

2.1. ALL STRUCTURES MUST MEET THE REQUIREMENTS FROM MANUFACTURER DESIGN BUOYANCY CALCULATIONS AND THE LIVE LOADS SHOWN BELOW

2.1.1. CONCENTRATED LIVE LOAD

2.1.1.1. CONTAINER HANDLERS TAYLOR TETCP 1100I OR EQUIVALENT

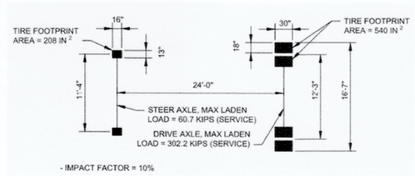

SYMBOLS:

NORTH ARROW

X / XX.X — SECTION, DETAIL, OR ELEVATION CALLOUT

X / XX.X — DRAWING WHERE SECTION, DETAIL OR ELEVATION IS SHOWN OR CALLED FROM

X / XX.X — SECTION OR ELEVATION CUT

X / XX.X — TITLE, SCALE: X' = X'-XX" — PLAN, SECTION, DETAIL, OR ELEVATION

ABBREVIATIONS:

&	AND
±	APPROXIMATELY
@	AT
℄	CENTERLINE
Ø	DIAMETER
°	DEGREES
=	EQUALS
"	INCHES, SECONDS
'	FEET, MINUTES
ACI	AMERICAN CONCRETE INSTITUTE
ACP	ASPHALT CONCRETE PAVEMENT
ADMIN	ADMINISTRATION
APPROX	APPROXIMAT (-E, -LY)
APWA	AMERICAN PUBLIC WORKS ASSOCIATION
ASTM	AMERICAN SOCIETY FOR TESTING AND MATERIALS
BMP	BEST MANAGEMENT PRACTICE
BOT	BOTTOM
CB	CATCH BASIN
CIP	CAST IN PLACE
CLR	CLEAR (-ANCE)
CMP	CORRUGATED METAL PIPE
CONC	CONCRETE
CONT	CONTINUOUS
COMM	COMMUNICATION(S)
DEMO	DEMOLISH OR DEMOLITION
DIA	DIAMETER
DIP	DUCTILE IRON PIPE
DWG(S)	DRAWING (-S)
EA	EACH
EL, ELEV	ELEVATION
EMBED	EMBEDMENT
EQ	EQUAL (-LY)
EW	EACH WAY
EXIST, EX	EXISTING
EXP JT	EXPANSION JOINT
f'c	COMPRESSIVE STRENGTH
FT	FEET, FOOT
GALV	GALVANIZE (-D)
GPS	GLOBAL POSITIONING SYSTEM
HMA	HOT MIX ASPHALT
HORIZ	HORIZONTAL
IE	INVERT ELEVATION
IN.	INCH (-ES)
JT	JOINT
MAX	MAXIMUM
MH	MANHOLE
MHHW	MEAN HIGHER HIGH WATER
MIN	MINIMUM
MJ	MECHANICAL JOINT
MLLW	MEAN LOWER LOW WATER
MSL	MEAN SEA LEVEL
N	NORTH
NAD	NORTH AMERICAN DATUM
NAVD	NORTH AMERICAN VERTICAL DATUM
NE	NORTHEAST
NIC	NOT IN CONTRACT
NIM	NORTH INTERMODAL
NGVD	NATIONAL GEODETIC VERTICAL DATUM
NW	NORTHWEST
OC	ON CENTER
OD	OUTSIDE DIAMETER
OHW	ORDINARY HIGH WATER
PERP	PERPENDICULAR
PSF	POUNDS PER SQUARE FEET
PSI	POUNDS PER SQUARE INCH
PT	POINT
R, RAD	RADIUS
R/C	REINFORCED CONCRETE
REINF	REINFORC (-E,-ED,-ING,-MENT)
REQ'D	REQUIRED
S	SECONDS, SOUTH
SCHED	SCHEDULE
SD	STORM DRAIN
SE	SOUTHEAST
SIM	SIMILAR
SPA	SPACE
SPECS	SPECIFICATIONS
SQ	SQUARE
SS	SANITARY SEWER/STAINLESS STEEL
SW	SOUTHWEST
SWPPP	STORMWATER POLLUTION PREVENTION PLAN
SWMM	STORM WATER MANAGEMENT MANUAL
T&B	TOP & BOTTOM
TEMP	TEMPORARY
TESC	TEMPORARY EROSION AND SEDIMENT CONTROL
THK	THICK
THRU	THROUGH
TMC	TACOMA MUNICIPAL CODE
TOPO	TOPOGRAPHY
TPU	TACOMA PUBLIC UTILITIES
TWIC	TRANSPORTATION WORKER IDENTIFICATION CREDENTIAL
TYP	TYPICAL
UNO	UNLESS NOTED OTHERWISE
V	VOLT
W/	WITH
W/O	WITHOUT
WSDOT	WASHINGTON STATE DEPARTMENT OF TRANSPORTATION

FOR BID

G2.0

2 OF 28

PORT OF TACOMA
WEST SITCUM MAIN SUBSTATIONS REPLACEMENT
GENERAL NOTES, SYMBOLS, & ABBREVIATIONS

CONT/CONS: PA000000140 | TOWNSHIP: 21 | RANGE: 3 | SECTION: 34
M. ID: 201178.01 | DAT-HRZ: NAD 83-07 | VERT: NOS TIDAL (MLLW=0.0)
PHASE: 100% DESIGN SUBMITTAL | PARCEL: | DRAWING SCALE: AS SHOWN

APPROVED:
CHKDATE
DIRECTOR ENG. DATE
PRINTED BY: USJV675558 Aug 26, 2025
PORT ADDRESS: 1675 W LINCOLN AVE. TACOMA, WA 98421-2300

CE 8/26/25 CHECKED BY DATE
JV 8/26/25 PROJ. ENGR DATE

WSP USA Inc.
1700 Dexter Avenue
Suite 550
Tacoma, WA 98402
TEL: (206) 931-3000
FAX: (206) 931-2230

MARK: | REVISION: | BY: | APPR: | DATE:

Port of Tacoma
P.O. BOX 1837 TACOMA, WA 98401 (253)383-5841

PLAN - SITE #1 ACCESS - SUBSTATION #1

SCALE: NTS

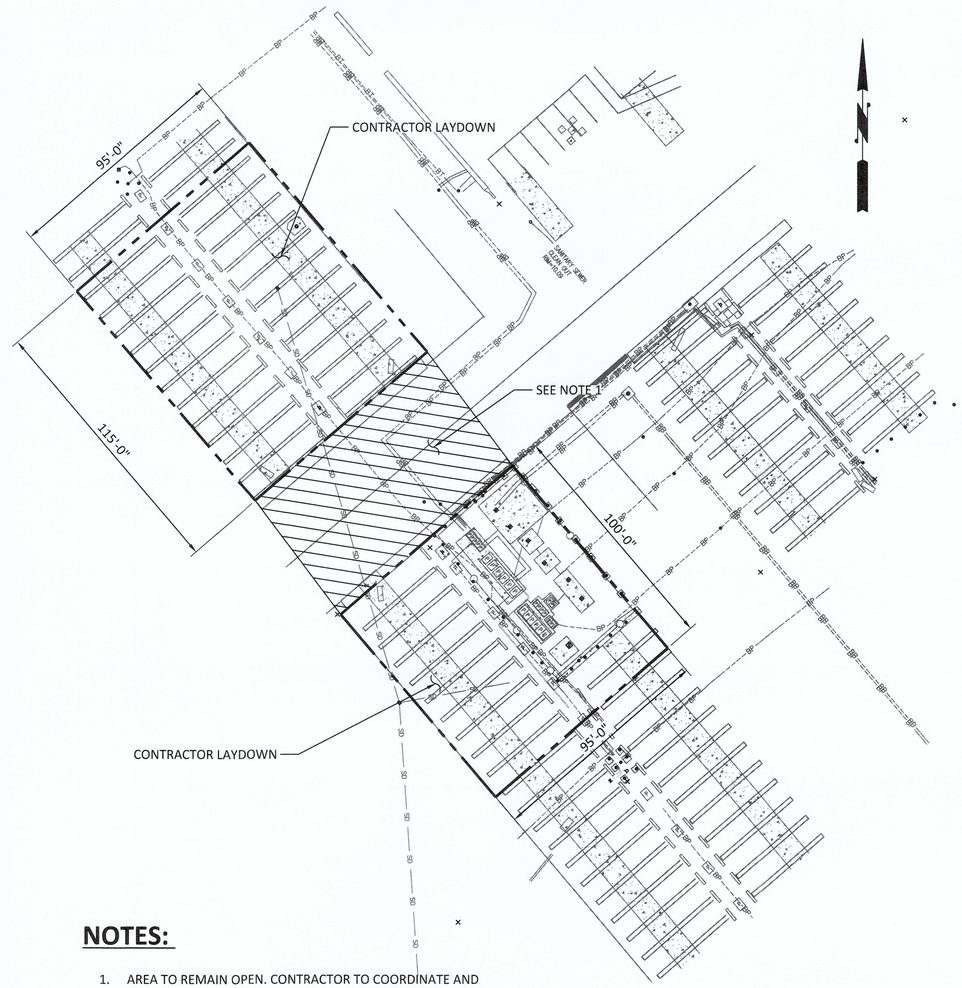

NOTES:

1. AREA TO REMAIN OPEN. CONTRACTOR TO COORDINATE AND PROVIDE 14 DAYS ADVANCE NOTICE TO PORT AND TENANT WHEN WORK IS TO BE PERFORMED OUTSIDE OF LAYDOWN AREAS.
2. WORK AREA LIMITS MUST BE CLEARLY MARKED IN FIELD WITH HIGH VISIBILITY TRAFFIC CONTROL BARRELS WITH FLASHING LIGHTS SPACED ±10' APART OR ALTERNATIVE MEANS APPROVED BY THE ENGINEER.

PLAN - LAYDOWN AREA

SCALE: 1" = 30'

1" = 10' 10 0 10 20 scale feet

FOR BID

G3.0
3 OF 28

PORT OF TACOMA
WEST SITCUM MAIN SUBSTATIONS REPLACEMENT
SITE ACCESS PLAN
SUBSTATION #1

APPROVED:
CHKDATE: 8/26/25
DIRECTOR ENG: DATE

CE 8/26/25
CHECKED BY DATE
JV 8/26/25
DATE PROJ. ENGR DATE
USJV675558 Aug 26, 2025
1675 W LINCOLN AVE.
TACOMA, WA 98421-2300

WSP USA Inc.
1201 Pacific Avenue
Suite 550
Tacoma, WA 98402
TEL: (206) 431-2000
FAX: (206) 431-2230

Port of Tacoma
P.O. BOX 1837 TACOMA, WA 98401 (253)383-5841

MARK:	REVISION:	BY:	APPR:	DATE:

CONT/CONS: PA000000140 | TOWNSHIP: 21 | RANGE: 3 | SECTION: 34
M. ID: 201178.01 | DAT-HRZ: NAD 83-07 | VERT: NOS TIDAL (MLLW=0.0) | PRINTED BY:
PHASE: 100% DESIGN SUBMITTAL | PARCEL: | DRAWING SCALE: AS SHOWN | PORT ADDRESS:

PLAN - SITE #2 ACCESS - SUBSTATION #3

SCALE: NTS

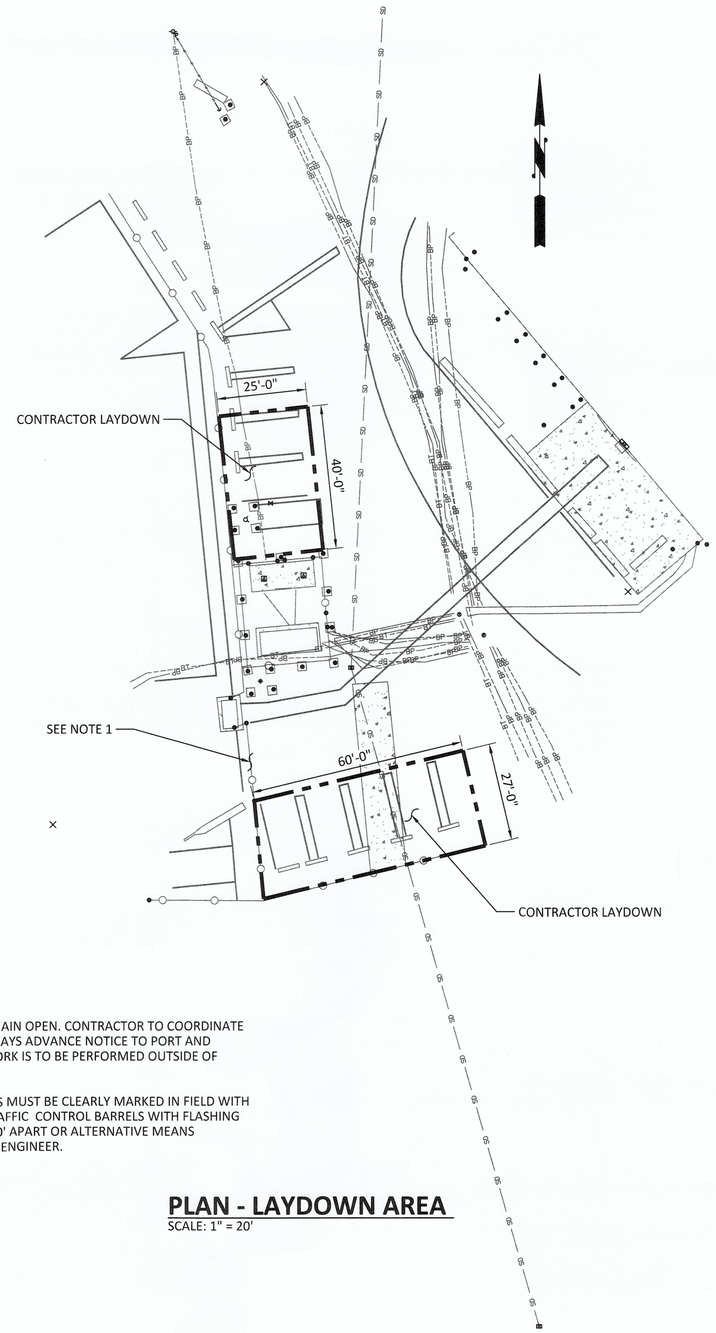

NOTES:

1. ENTRANCE TO REMAIN OPEN. CONTRACTOR TO COORDINATE AND PROVIDE 14 DAYS ADVANCE NOTICE TO PORT AND TENANT WHEN WORK IS TO BE PERFORMED OUTSIDE OF LAYDOWN AREAS.
2. WORK AREA LIMITS MUST BE CLEARLY MARKED IN FIELD WITH HIGH VISIBILITY TRAFFIC CONTROL BARRELS WITH FLASHING LIGHTS SPACED ±10' APART OR ALTERNATIVE MEANS APPROVED BY THE ENGINEER.

PLAN - LAYDOWN AREA

SCALE: 1" = 20'

1" = 10' 10 0 10 20 scale feet

FOR BID

G3.1

4 OF 28

CONT/CONS: PA00000140 | TOWNSHIP: 21 | RANGE: 3 | SECTION: 34

M. ID: 201178.01 | DAT-HRZ: NAD 83-07 | VERT: NOS TIDAL (MLLW=0.0)

PHASE: 100% DESIGN SUBMITTAL | PARCEL: | DRAWING SCALE: AS SHOWN

PORT OF TACOMA

WEST SITCUM MAIN SUBSTATIONS REPLACEMENT

SITE ACCESS PLAN SUBSTATION #3

APPROVED:

CHKDATE: 8/26/25

DIRECTOR ENG. DATE

PRINTED BY: USJV675558 Aug 26, 2025

PORT ADDRESS: 1675 W LINCOLN AVE. TACOMA, WA 98421-2300

CE 8/26/25

CHECKED BY JV 8/26/25

PROJ. ENGR DATE

WSP USA Inc.
1201 Pacific Avenue
Suite 550
Tacoma, WA 98402
TEL: (206) 431-3920
FAX: (206) 431-2250

MARK:	REVISION:	BY:	APPR:	DATE:

Port of Tacoma
P.O. BOX 1837 TACOMA, WA 98401 (253)383-5841

BINDING EDGE

PORT OF TACOMA FILE: C:\Users\USJV675558\WSP O365\NW Maritime Projects - Projects\30902693\004\CADD\Dwgs\01_G03-01

BINDING EDGE

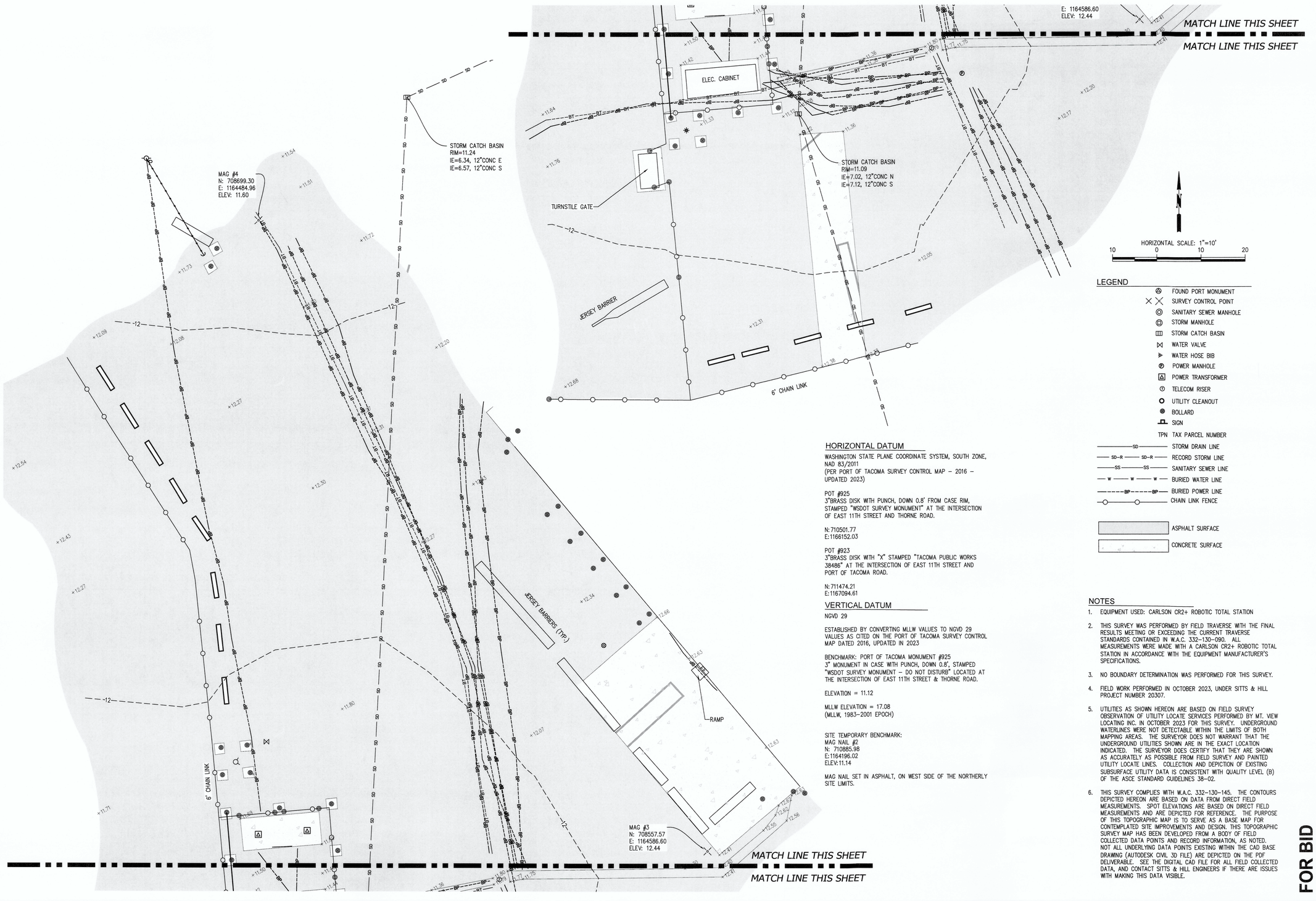

HORIZONTAL DATUM

WASHINGTON STATE PLANE COORDINATE SYSTEM, SOUTH ZONE, NAD 83/2011
(PER PORT OF TACOMA SURVEY CONTROL MAP – 2016 – UPDATED 2023)

POT #925
3"BRASS DISK WITH PUNCH, DOWN 0.8' FROM CASE RIM, STAMPED "WSDOT SURVEY MONUMENT" AT THE INTERSECTION OF EAST 11TH STREET AND THORNE ROAD.

N: 710501.77
E: 1166152.03

POT #923
3"BRASS DISK WITH "X" STAMPED "TACOMA PUBLIC WORKS 38486" AT THE INTERSECTION OF EAST 11TH STREET AND PORT OF TACOMA ROAD.

N: 711474.21
E: 1167094.61

VERTICAL DATUM

NGVD 29

ESTABLISHED BY CONVERTING MLLW VALUES TO NGVD 29 VALUES AS CITED ON THE PORT OF TACOMA SURVEY CONTROL MAP DATED 2016, UPDATED IN 2023

BENCHMARK: PORT OF TACOMA MONUMENT #925
3" MONUMENT IN CASE WITH PUNCH, DOWN 0.8', STAMPED "WSDOT SURVEY MONUMENT – DO NOT DISTURB" LOCATED AT THE INTERSECTION OF EAST 11TH STREET & THORNE ROAD.

ELEVATION = 11.12

MLLW ELEVATION = 17.08
(MLLW, 1983–2001 EPOCH)

SITE TEMPORARY BENCHMARK:
MAG NAIL #2
N: 710885.98
E: 1164196.02
ELEV: 11.14

MAG NAIL SET IN ASPHALT, ON WEST SIDE OF THE NORTHERLY SITE LIMITS.

LEGEND

- FOUND PORT MONUMENT
- SURVEY CONTROL POINT
- SANITARY SEWER MANHOLE
- STORM MANHOLE
- STORM CATCH BASIN
- WATER VALVE
- WATER HOSE BIB
- POWER MANHOLE
- POWER TRANSFORMER
- TELECOM RISER
- UTILITY CLEANOUT
- BOLLARD
- SIGN
- TPN TAX PARCEL NUMBER
- SD — STORM DRAIN LINE
- SD-R — RECORD STORM LINE
- SS — SANITARY SEWER LINE
- W — BURIED WATER LINE
- BP — BURIED POWER LINE
- CHAIN LINK FENCE
- ASPHALT SURFACE
- CONCRETE SURFACE

NOTES

1. EQUIPMENT USED: CARLSON CR2+ ROBOTIC TOTAL STATION
2. THIS SURVEY WAS PERFORMED BY FIELD TRAVERSE WITH THE FINAL RESULTS MEETING OR EXCEEDING THE CURRENT TRAVERSE STANDARDS CONTAINED IN W.A.C. 332-130-090. ALL MEASUREMENTS WERE MADE WITH A CARLSON CR2+ ROBOTIC TOTAL STATION IN ACCORDANCE WITH THE EQUIPMENT MANUFACTURER'S SPECIFICATIONS.
3. NO BOUNDARY DETERMINATION WAS PERFORMED FOR THIS SURVEY.
4. FIELD WORK PERFORMED IN OCTOBER 2023, UNDER SITTS & HILL PROJECT NUMBER 20307.
5. UTILITIES AS SHOWN HEREON ARE BASED ON FIELD SURVEY OBSERVATION OF UTILITY LOCATE SERVICES PERFORMED BY MT. VIEW LOCATING INC. IN OCTOBER 2023 FOR THIS SURVEY. UNDERGROUND WATERLINES WERE NOT DETECTABLE WITHIN THE LIMITS OF BOTH MAPPING AREAS. THE SURVEYOR DOES NOT WARRANT THAT THE UNDERGROUND UTILITIES SHOWN ARE IN THE EXACT LOCATION INDICATED. THE SURVEYOR DOES CERTIFY THAT THEY ARE SHOWN AS ACCURATELY AS POSSIBLE FROM FIELD SURVEY AND PAINTED UTILITY LOCATE LINES. COLLECTION AND DEPICTION OF EXISTING SUBSURFACE UTILITY DATA IS CONSISTENT WITH QUALITY LEVEL (B) OF THE ASCE STANDARD GUIDELINES 38-02.
6. THIS SURVEY COMPLIES WITH W.A.C. 332-130-145. THE CONTOURS DEPICTED HEREON ARE BASED ON DATA FROM DIRECT FIELD MEASUREMENTS. SPOT ELEVATIONS ARE BASED ON DIRECT FIELD MEASUREMENTS AND ARE DEPICTED FOR REFERENCE. THE PURPOSE OF THIS TOPOGRAPHIC MAP IS TO SERVE AS A BASE MAP FOR CONTEMPLATED SITE IMPROVEMENTS AND DESIGN. THIS TOPOGRAPHIC SURVEY MAP HAS BEEN DEVELOPED FROM A BODY OF FIELD COLLECTED DATA POINTS AND RECORD INFORMATION, AS NOTED. NOT ALL UNDERLYING DATA POINTS EXISTING WITHIN THE CAD BASE DRAWING (AUTODESK CIVIL 3D FILE) ARE DEPICTED ON THE PDF DELIVERABLE. SEE THE DIGITAL CAD FILE FOR ALL FIELD COLLECTED DATA, AND CONTACT SITTS & HILL ENGINEERS IF THERE ARE ISSUES WITH MAKING THIS DATA VISIBLE.

FOR BID

V1.0

5 OF 28

Port of Tacoma
P.O. BOX 1837 TACOMA, WA 98401 (253)383-5841

WSP USA Inc.
3700 Pacific Avenue South
Suite 300
Federal Way, WA 98003-2600
TEL: (206) 431-2300
FAX: (206) 431-2250

MARK:	REVISION:	BY:	APPR:	DATE:

STATE OF WASHINGTON
SCHILLING
REGISTERED PROFESSIONAL ENGINEER
08-26-25

APPROVED:
DIRECTOR ENG. DATE

STT 08/26/25
CHECKED BY DATE
DMS 08/26/25
PROJ. ENGR DATE
PRINTED BY: schillingd Aug 26, 2025
PORT ADDRESS: 1675 W LINCOLN AVE.
TACOMA, WA 98421-2300

PORT OF TACOMA
WEST SITCUM MAIN SUBSTATIONS REPLACEMENT
TOPOGRAPHIC SURVEY

CONT/CONS: PA000000140	TOWNSHIP: 21	RANGE: 03	SECTION: 34
M. ID: 201178.01	DAT-HRZ: NAD 83-11	VERT: NOS TIDAL (MLLW=0.0)	
PHASE: FOR BID	PARCEL:	DRAWING SCALE: AS SHOWN	

PORT OF TACOMA FILE: O:\20300\20307\Drawings\20307 - Topographic survey - sheet 1

BINDING EDGE

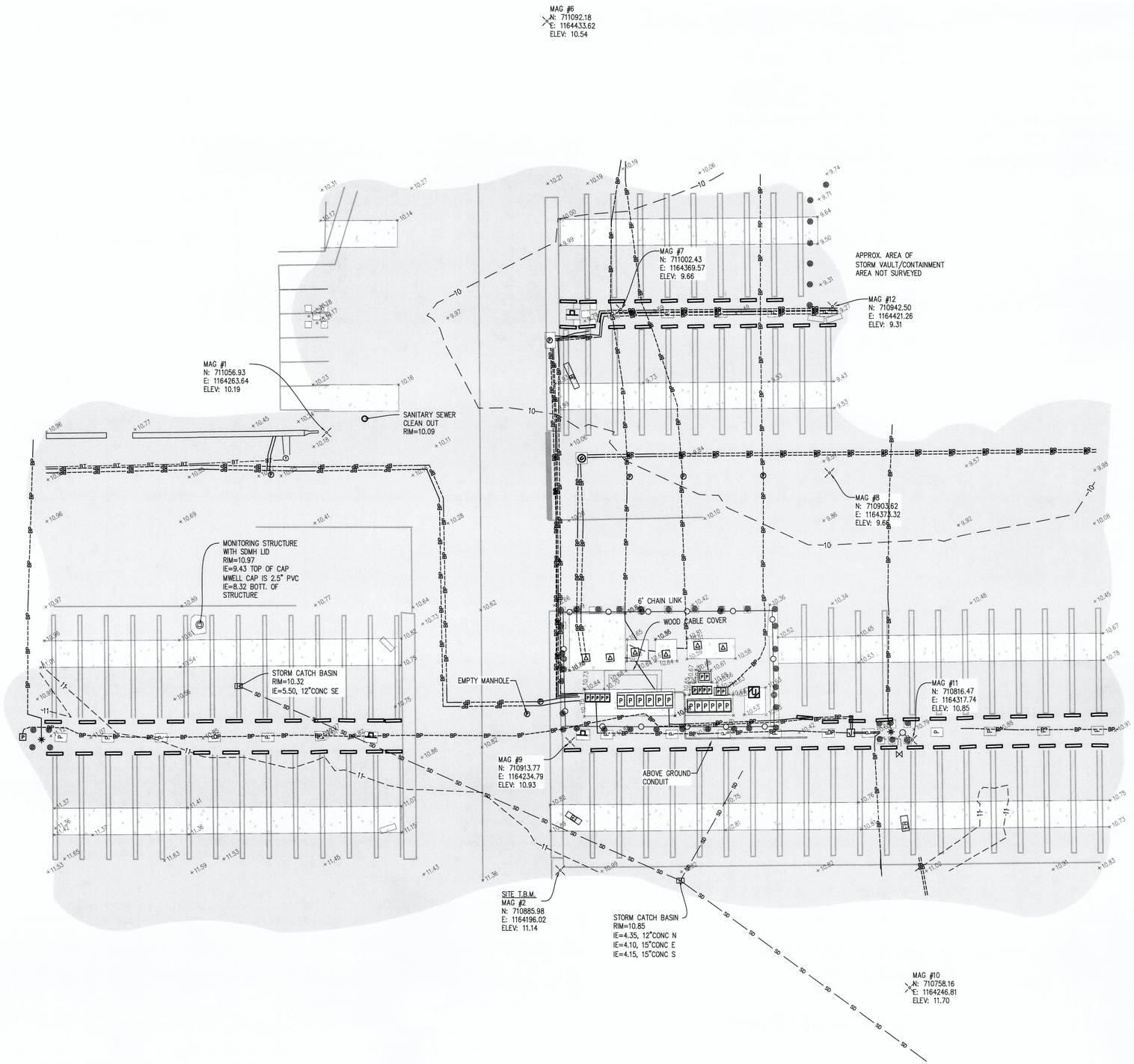

HORIZONTAL SCALE: 1"=20'

20 0 20 40

LEGEND

- FOUND PORT MONUMENT
- SURVEY CONTROL POINT
- SANITARY SEWER MANHOLE
- STORM MANHOLE
- STORM CATCH BASIN
- WATER VALVE
- WATER HOSE BIB
- POWER MANHOLE
- POWER TRANSFORMER
- TELECOM RISER
- UTILITY CLEANOUT
- BOLLARD
- SIGN
- TPN TAX PARCEL NUMBER
- SD STORM DRAIN LINE
- SD-R SD-R RECORD STORM LINE
- SS SS SANITARY SEWER LINE
- W W W BURIED WATER LINE
- BP BP BURIED POWER LINE
- CHAIN LINK FENCE
- ASPHALT SURFACE
- CONCRETE SURFACE

FOR BID

V1.1
6 OF 28

CONT/CONS: PA000000140
M. ID: 201178.01
PHASE: FOR BID

PORT OF TACOMA
WEST SITCUM MAIN SUBSTATIONS REPLACEMENT
TOPOGRAPHIC SURVEY

TOWNSHIP: 21 | RANGE: 03 | SECTION: 34
DAT-HRZ: NAD 83-11 | VERT: NOS TIDAL (MLLW=0.0)
PARCEL: | DRAWING SCALE: AS SHOWN

APPROVED:
DIRECTOR ENG. DATE 11/5/25

STT 08/26/25
CHECKED BY DATE
DMS 08/26/25
PROJ. ENGR DATE
PRINTED BY: schillingd Aug 26, 2025
PORT ADDRESS: 1675 W LINCOLN AVE.
TACOMA, WA 98421-2300

WSP USA Inc.
1201 Pacific Avenue South
Suite 300
Federal Way, WA 98003-2600
TEL: (206) 431-2300
FAX: (206) 431-2350

Port of Tacoma
P.O. BOX 1837 TACOMA, WA 98401 (253)383-5841

MARK:	REVISION:	BY:	APPR:	DATE:

STATE OF WASHINGTON SCHILLING MARTIN MOLZAHNER REGISTERED PROFESSIONAL ENGINEER
08.26.25

PORT OF TACOMA FILE: O:\203001203 07\Drawings\20307 - Topographic survey - sheet 2

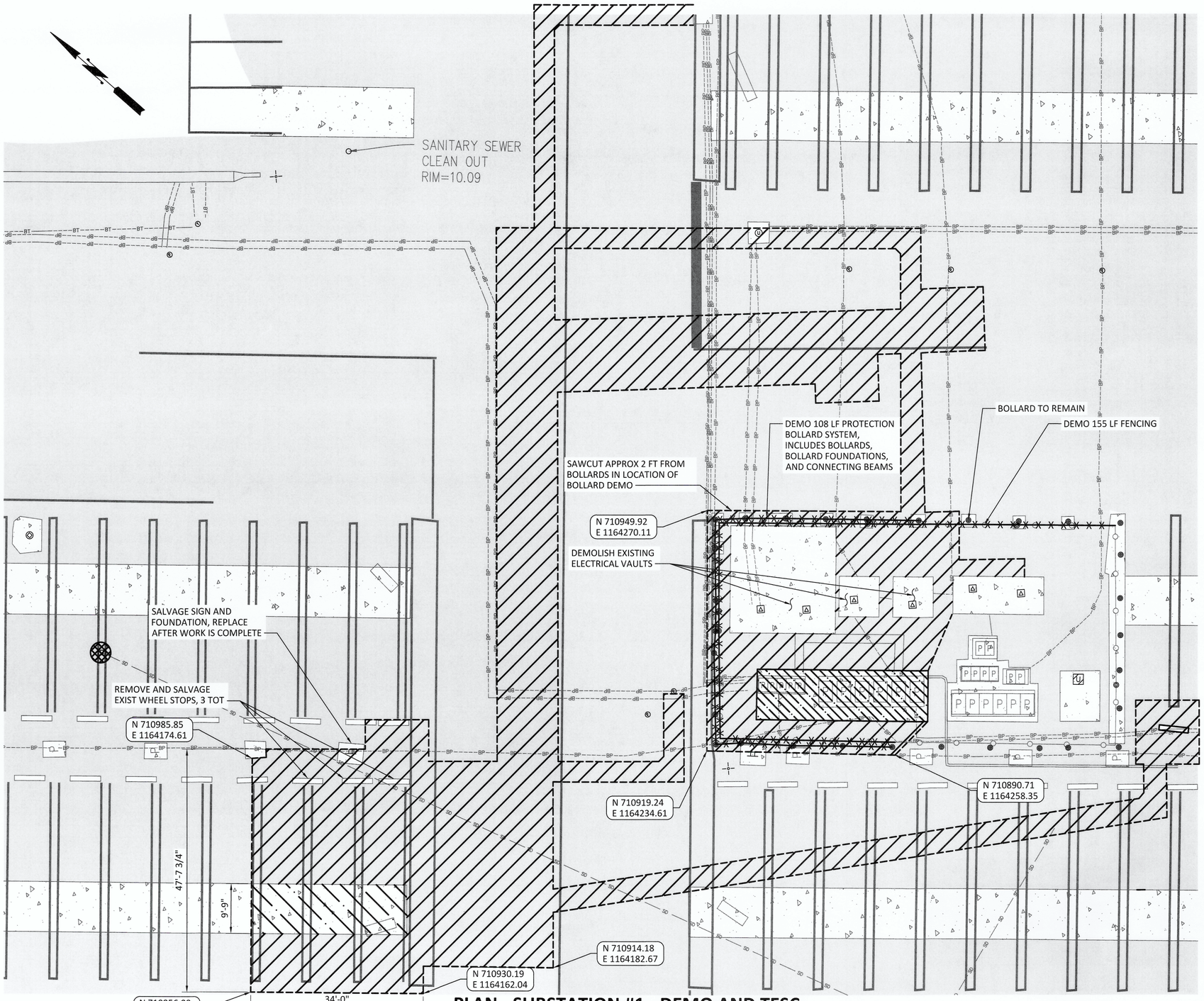

PLAN - SUBSTATION #1 - DEMO AND TESC

SCALE: 1" = 10'

TESC NOTES:

1. SEE C4.0 FOR ADDITIONAL NOTES.
2. INSTALL INLET PROTECTION ON ANY EXISTING CATCH BASINS LOCATED WITHIN 100 FEET OF PROJECT AREA, INCLUDING THOSE THAT MAY NOT BE SHOWN ON THIS DRAWING.
3. TESC BMP'S MUST BE IN ACCORDANCE WITH DETAILS ON C4.0 AND WITH 2021 CITY OF TACOMA SWMM, VOLUME 3, CHAPTER 1, INCLUDING BUT NOT LIMITED TO THE FOLLOWING:
   A. BMP C123-PLASTIC COVERING
   B. BMP C140-DUST CONTROL
   C. BMP C220-STORM DRAIN INLET PROTECTION

DEMO / SITE PREP NOTES:

1. ALL DEMOLISHED MATERIALS MUST DISPOSED OF BY THE CONTRACTOR, EXCEPT FOR EXCAVATED SOIL MATERIALS THAT ARE REUSABLE.
2. REMOVE AND STOCKPILE SOILS FOR REUSE DURING BACKFILL. DISPOSE OF EXCESS OR GEOTECHNICALLY UNSUITABLE MATERIAL OFF-SITE, SEE NOTE 10 ON G2.0. PROTECT STOCKPILES PER TESC DETAIL 2/C4.0

LEGEND

- ASPHALT DEMO
- CONC DEMO (ASSUME 12" THICK)
- ASPHALT SAW-CUT
- CATCH BASIN INLET PROTECTION, SEE SHEET C4.0
- EXISTING CONCRETE
- EXISTING ASPHALT

1" = 10' scale — 10 0 10 20 feet

FOR BID

Port of Tacoma
P.O. BOX 1837 TACOMA, WA 98401 (253)383-5841

WSP USA Inc.
1201 Pacific Avenue
Suite 550
Tacoma, WA 98402
TEL: (206) 431-2300
FAX: (206) 431-2250

MARK:	REVISION:	BY:	APPR:	DATE:

JOSHUA J. VOECKS, STATE OF WASHINGTON, 37030, REGISTERED PROFESSIONAL ENGINEER

APPROVED: CE 8/26/25
CHKDATE: CHECKED BY DATE
DIRECTOR ENG.: JV 8/26/25
DATE PROJ. ENGR DATE
PRINTED BY: USJV675558 Aug 26, 2025
PORT ADDRESS: 1675 W LINCOLN AVE.
TACOMA, WA 98421-2300

PORT OF TACOMA
WEST SITCUM MAIN SUBSTATIONS REPLACEMENT
DEMO, & TESC PLAN
SUBSTATION #1

C2.0

7 OF 28

CONT/CONS: PA000000140 | TOWNSHIP: 21 | RANGE: 3 | SECTION: 34
M. ID: 201178.01 | DAT-HRZ: NAD 83-07 | VERT: NOS TIDAL (MLLW=0.0)
PHASE: 100% DESIGN SUBMITTAL | PARCEL: | DRAWING SCALE: AS SHOWN

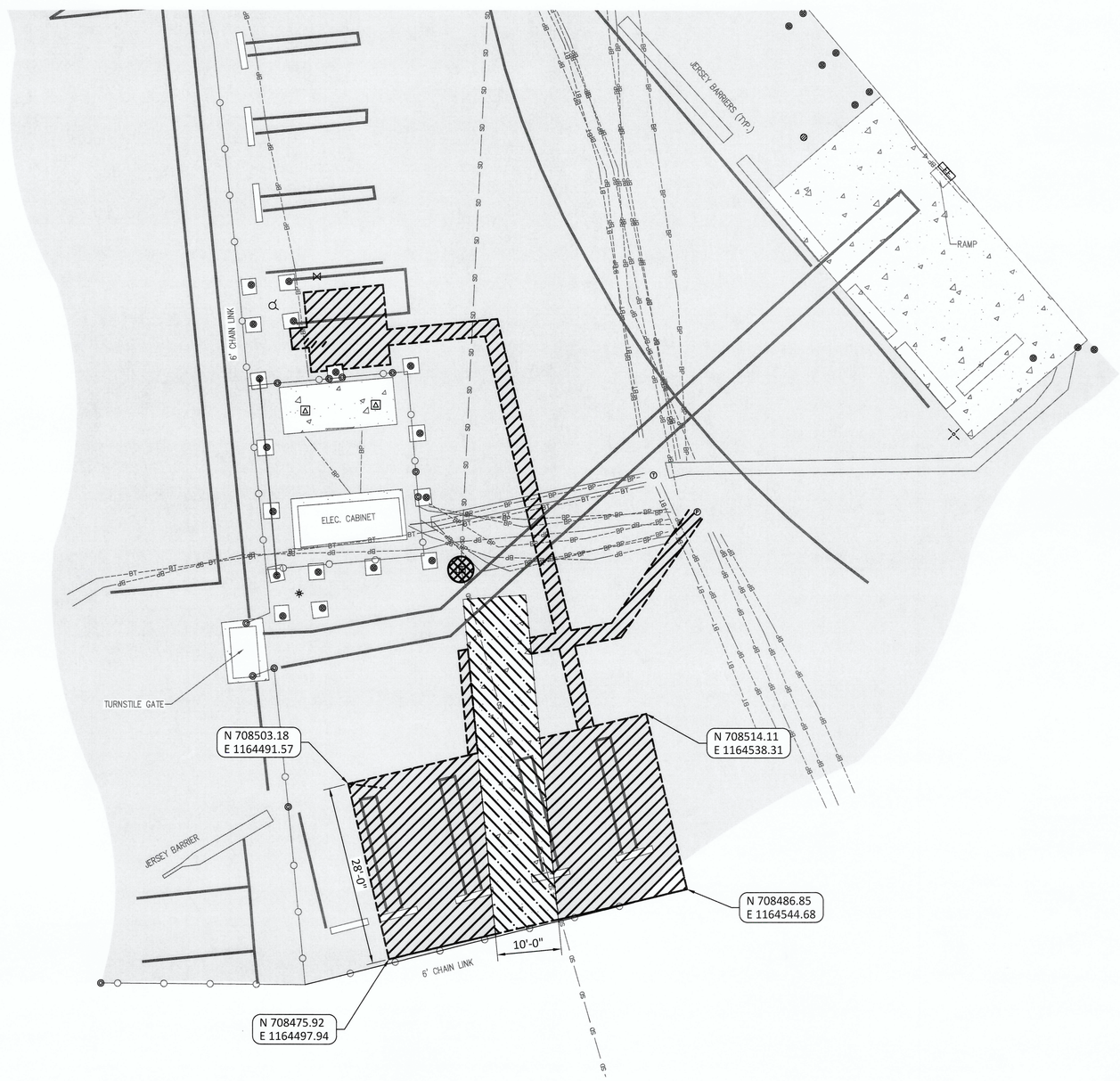

PLAN - SUBSTATION #3 - DEMO AND TESC

SCALE: 1" = 10'

TESC NOTES:

1. SEE C4.0 FOR ADDITIONAL NOTES.
2. INSTALL INLET PROTECTION ON ANY EXISTING CATCH BASINS LOCATED WITHIN 100 FEET OF PROJECT AREA, INCLUDING THOSE THAT MAY NOT BE SHOWN ON THIS DRAWING.
3. TESC BMP'S MUST BE IN ACCORDANCE WITH DETAILS ON C4.0 AND WITH 2021 CITY OF TACOMA SWMM, VOLUME 3, CHAPTER 1, INCLUDING BUT NOT LIMITED TO THE FOLLOWING:
   A. BMP C123-PLASTIC COVERING
   B. BMP C140-DUST CONTROL
   C. BMP C220-STORM DRAIN INLET PROTECTION

DEMO / SITE PREP NOTES:

1. ALL DEMOLISHED MATERIALS MUST DISPOSED OF BY THE CONTRACTOR, EXCEPT FOR EXCAVATED SOIL MATERIALS THAT ARE REUSABLE.
2. REMOVE AND STOCKPILE SOILS FOR REUSE DURING BACKFILL. DISPOSE OF EXCESS OR GEOTECHNICALLY UNSUITABLE MATERIAL OFF-SITE, SEE NOTE 10 ON G2.0. PROTECT STOCKPILES PER TESC DETAIL 2/C4.0

LEGEND

- ASPHALT DEMO
- CONC SLEEPER DEMO (ASSUME 12" THICK)
- ASPHALT SAW-CUT
- CATCH BASIN INLET PROTECTION, SEE SHEET C4.0
- EXISTING CONCRETE
- EXISTING ASPHALT

1" = 10' scale: 10 0 10 20 feet

FOR BID

Port of Tacoma
P.O. BOX 1837 TACOMA, WA 98401 (253)383-5841

WSP USA Inc.
2701 Bond Avenue
Suite 550
Tacoma, WA 98402
TEL: (206) 931-2200
FAX: (206) 931-2230

MARK:	REVISION:	BY:	APPR:	DATE:

JOSHUA J. VOECKS, STATE OF WASHINGTON, REGISTERED PROFESSIONAL ENGINEER, 57908

	CE	8/26/25
	CHECKED BY	DATE
	JV	8/26/25
	PROJ. ENGR	DATE
APPROVED:		
CHKDATE:	DIRECTOR ENG.	DATE
PRINTED BY:	USJV675558 Aug 26, 2025	
PORT ADDRESS:	1675 W LINCOLN AVE. TACOMA, WA 98421-2300	

PORT OF TACOMA
WEST SITCUM MAIN SUBSTATIONS REPLACEMENT
DEMO, & TESC PLAN SUBSTATION #3

C2.1

8 OF 28

CONT/CONS: PA000000140	TOWNSHIP: 21	RANGE: 3	SECTION: 34
M. ID: 2011178.01	DAT-HRZ: NAD 83-07	VERT: NOS TIDAL (MLLW=0.0)	
PHASE: 100% DESIGN SUBMITTAL	PARCEL:	DRAWING SCALE: AS SHOWN	

BINDING EDGE

ELECTRICAL VAULT AND CONDUIT TABLE		
POINT #	NORTHING	EASTING
A	710845.15	1164284.18
B	710931.98	1164189.39
C	710940.57	1164210.64
D	710921.46	1164227.26
E	711014.76	1164284.41
F	711037.85	1164322.32
G	710967.97	1164194.52
H	710965.33	1164191.52
I	710857.21	1164296.34
J	710854.15	1164292.81
K	710990.84	1164268.37
L	710996.86	1164275.28
M	710947.23	1164308.81
N	710937.92	1164329.95
O	710951.46	1164176.07
P	710948.21	1164172.27
Q	710908.12	1164291.47
R	710904.78	1164287.76
S	710916.32	1164182.84

FENCING TABLE		
POINT #	NORTHING	EASTING
AA	710959.28	1164189.78
BB	710935.84	1164162.47
CC	710955.57	1164145.53
DD	710979.01	1164172.85
EE	710892.00	1164260.53
FF	710919.53	1164292.95

CONC PAD TABLE		
POINT #	NORTHING	EASTING
1	710948.52	1164154.22
2	710943.97	1164158.12
3	710955.36	1164148.36
4	710970.17	1164165.63
5	710969.69	1164179.21
6	710963.62	1164184.42

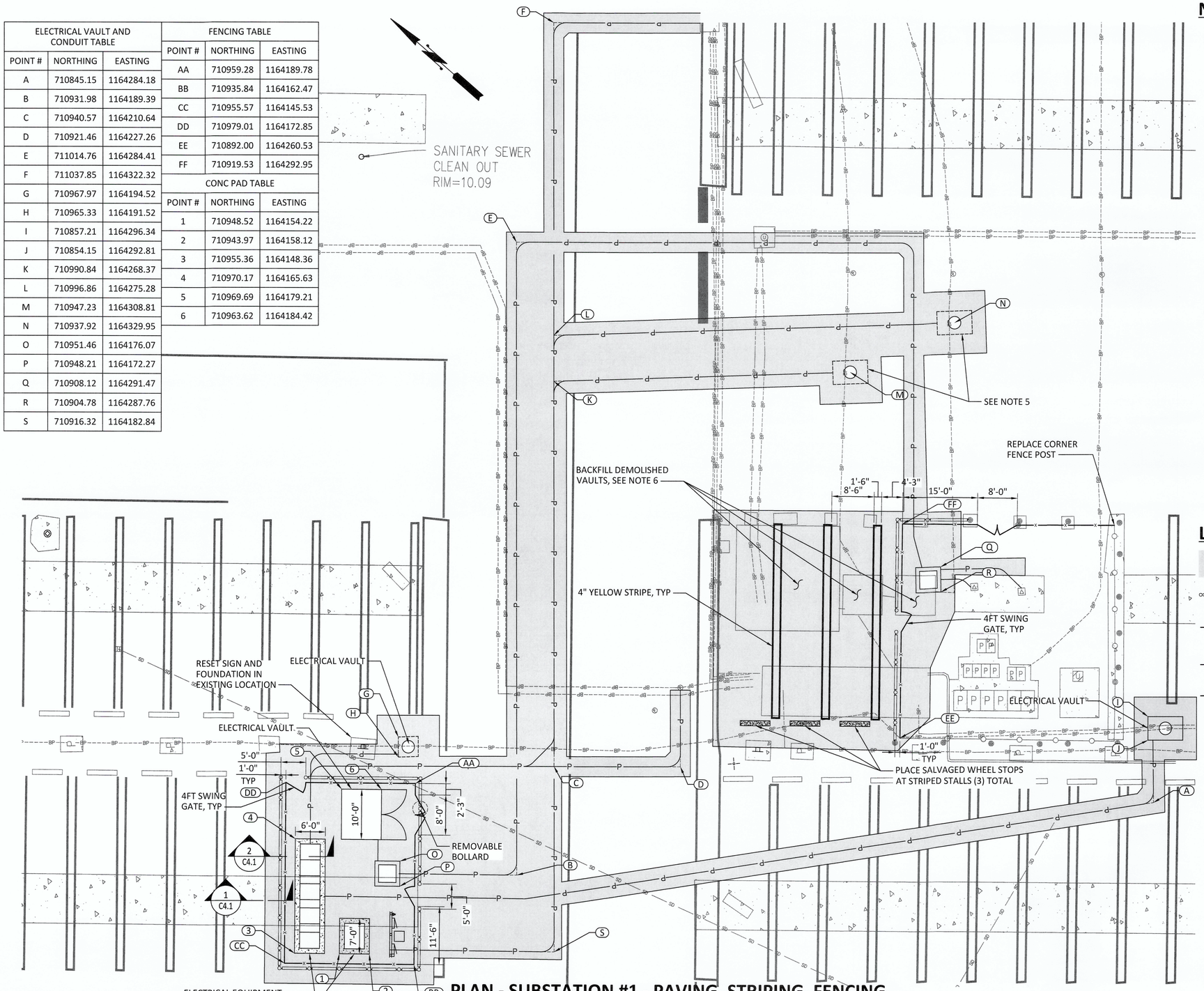

PLAN - SUBSTATION #1 - PAVING, STRIPING, FENCING

SCALE: 1" = 10'

NOTES:

1. FINISH GRADE OF PAVEMENT RESTORATION MUST BE UNIFORMLY SLOPED BETWEEN SAW-CUT EDGES TO MAINTAIN EXISTING DRAINAGE PATTERNS. TOP OF REPLACEMENT PAVEMENT MUST BE FLUSH WITH TOP OF EXISTING PAVEMENT AT INTERFACE. APPLY JOINT SEALANT BETWEEN EXIST AND REPLACEMENT PAVEMENT.
2. THICKNESS OF HMA SURFACE RESTORATION MUST BE 8" MIN HMA OVER 12" MIN BASE COURSE OVER COMPACTED SUBGRADE. BASIS OF BID SHALL BE 8" FOR EXISTING HMA, BUT MATCH EXIST ASPHALT THICKNESS IF GREATER THAN 8". ALL THICKNESSES INDICATED ARE COMPACTED THICKNESS.
3. CONCRETE PADS FOR ELECTRICAL EQUIPMENT MUST BE 1'-0" THICK W/ 1'-6" THICKENED EDGE AND TOP LEVEL 6" ABOVE FINISH GRADE. CONCRETE PAD MUST BE REINFORCED WITH #4 BAR @ 12" OC EW LOCATED 3" FROM SURFACE. PLACE CONDUIT PRIOR TO POURING CONCRETE PAD.
4. CONCRETE PAD SIZE MAY VARY BASED ON EQUIPMENT PROCURED. EXTEND CONCRETE PAD 6" BEYOND PROCURED EQUIPMENT.
5. LOCATION OF VAULTS MAY VARY BASED ON CONTRACTORS UTILITY INVESTIGATION. ADJUST VAULTS AND CONDUIT AS REQUIRED TO CONNECT INTO EXISTING ELECTRICAL IN COORDINATION WITH THE ENGINEER.
6. BACKFILL DEMOLISHED VAULT AREAS WITH EXCESS SUITABLE EXCAVATED MATERIAL AND/OR STRUCTURAL FILL MATERIAL.
7. REPLACE EXISTING STRIPING REMOVED BY CONSTRUCTION ACTIVITIES.
8. PLACE AND COMPACT TO 95% A MINIMUM OF 6-INCH TO 8-INCH THICKNESS OF GRAVEL BACKFILL FOR FOUNDATIONS UNDER ALL ELECTRICAL STRUCTURES. CREATE A LEVEL AND UNIFORM SURFACE FOR PLACEMENT OF PRECAST CONCRETE STRUCTURES.

LEGEND

- HMA PAVING
- BOLLARD WITH INTERMEDIATE RAIL (1, 2 / C4.2)
- CHAINLINK FENCING (1 / C4.2)
- SINGLE SWING GATE (1 / C4.3)
- DOUBLE SWING GATE (4 / C4.3)

FOR BID

Port of Tacoma
P.O. BOX 1837 TACOMA, WA 98401 (253)383-5841

WSP USA Inc.
1111 Pacific Avenue
Suite 300
Tacoma, WA 98402
TEL: (206) 431-2300
FAX: (206) 431-2259

MARK:	REVISION:	BY:	APPR:	DATE:

JOSHUA J. VOECKS, STATE OF WASHINGTON, 27030, REGISTERED PROFESSIONAL ENGINEER

APPROVED:	CE	8/26/25
	CHECKED BY	DATE
CHKDATE	JV	8/26/25
DIRECTOR ENG. DATE	PROJ. ENGR	DATE
PRINTED BY:	USJV675558 Aug 26, 2025	
PORT ADDRESS:	1675 W LINCOLN AVE.	
	TACOMA, WA 98421-2300	

PORT OF TACOMA
WEST SITCUM MAIN SUBSTATIONS REPLACEMENT
SITE PLAN
SUBSTATION #1

TOWNSHIP: 21	RANGE: 3	SECTION: 34	
DAT-HRZ: NAD 83-07	VERT: NOS TIDAL (MLLW=0.0)		
DRAWING SCALE: AS SHOWN			

C3.0

9 OF 28

CONT/CONS: PA00000140	
M. ID: 201178.01	
PHASE: 100% DESIGN SUBMITTAL	PARCEL:

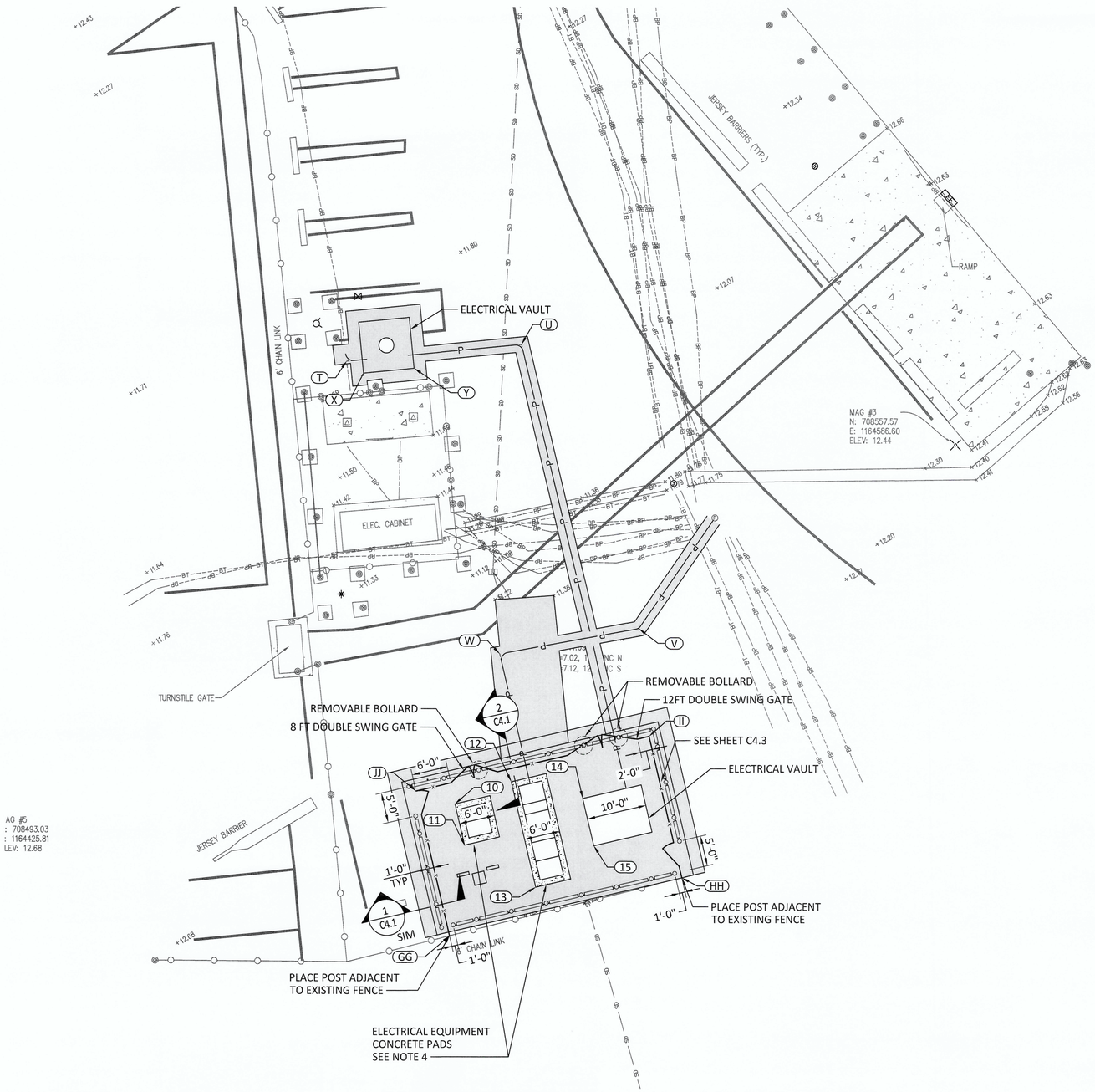

PLAN - SUBSTATION #3 - PAVING, STRIPING, FENCING

SCALE: 1" = 10'

NOTES:

1. FINISH GRADE OF PAVEMENT RESTORATION MUST BE UNIFORMLY SLOPED BETWEEN SAW-CUT EDGES TO MAINTAIN EXISTING DRAINAGE PATTERNS. TOP OF REPLACEMENT PAVEMENT MUST BE FLUSH WITH TOP OF EXISTING PAVEMENT AT INTERFACE. APPLY JOINT SEALANT BETWEEN EXIST AND REPLACEMENT PAVEMENT.
2. THICKNESS OF HMA SURFACE RESTORATION MUST BE 4" MIN HMA OVER 8" MIN BASE COURSE OVER COMPACTED SUBGRADE. BASIS OF BID SHALL BE 4" FOR EXISTING HMA, BUT MATCH EXIST ASPHALT THICKNESS IF GREATER THAN 4". ALL THICKNESSES INDICATED ARE COMPACTED THICKNESS.
3. CONCRETE PADS FOR ELECTRICAL EQUIPMENT MUST BE 1'-0" THICK W/ 1'-6" THICKENED EDGE AND TOP LEVEL 6" ABOVE FINISH GRADE. CONCRETE PAD MUST BE REINFORCED WITH #4 BAR EW LOCATED 3" FROM SURFACE. PLACE CONDUIT PRIOR TO POURING CONCRETE PAD.
4. CONCRETE PAD SIZE MAY VARY BASED ON EQUIPMENT PROCURED. EXTEND CONCRETE PAD 6" BEYOND PROCURED EQUIPMENT.
5. PLACE AND COMPACT TO 95% A MINIMUM OF 6-INCH TO 8-INCH THICKNESS OF GRAVEL BACKFILL FOR FOUNDATIONS UNDER ALL ELECTRICAL STRUCTURES. CREATE A LEVEL AND UNIFORM SURFACE FOR PLACEMENT OF PRECAST CONCRETE STRUCTURES.

LEGEND

	HMA PAVING
	BOLLARD WITH INTERMEDIATE RAIL (1, 2 / C4.2)
	CHAINLINK FENCING (1 / C4.2)
	SINGLE SWING GATE (1 / C4.3)
	DOUBLE SWING GATE (4 / C4.3)

CONC PAD TABLE

POINT #	NORTHING	EASTING
10	708498.09	1164502.90
11	708491.27	1164504.49
12	708501.76	1164512.31
13	708484.30	1164516.39
14	708499.01	1164524.25
15	708491.22	1164526.07

FENCING TABLE

POINT #	NORTHING	EASTING
GG	708476.22	1164501.98
HH	708485.94	1164540.79
II	708509.30	1164535.32
JJ	708500.20	1164496.37

ELECTRICAL VAULT AND CONDUIT TABLE

POINT #	NORTHING	EASTING
T	708571.36	1164484.79
U	708574.15	1164514.05
V	708527.06	1164533.62
W	708522.80	1164510.39
X	708569.37	1164487.61
Y	708570.17	1164496.07

1" = 10' 10 0 10 20 scale feet

FOR BID

C3.1

10 OF 28

CONT/CONS: PA000000140 | TOWNSHIP: 21 | RANGE: 3 | SECTION: 34
M. ID: 201178.01 | DAT-HRZ: NAD 83-07 | VERT: NOS TIDAL (MLLW=0.0)
PHASE: 100% DESIGN SUBMITTAL | PARCEL: | DRAWING SCALE: AS SHOWN

PORT OF TACOMA
WEST SITCUM MAIN SUBSTATIONS REPLACEMENT
SITE PLAN
SUBSTATION #3

APPROVED:
CHKDATE
DIRECTOR ENG.

CE 8/26/25
CHECKED BY DATE
JV 8/26/25
PROJ. ENGR DATE
PRINTED BY: USJV675558 Aug 26, 2025
PORT ADDRESS: 1675 W LINCOLN AVE. TACOMA, WA 98421-2300

Port of Tacoma
P.O. BOX 1837 TACOMA, WA 98401 (253)383-5841

WSP USA Inc.
1201 Pacific Avenue
Suite 550
Tacoma, WA 98402
TEL: (206) 431-2300
FAX: (206) 431-2250

MARK:	REVISION:	BY:	APPR:	DATE:

JOSHUA J. VOECKS
STATE OF WASHINGTON
48184
REGISTERED PROFESSIONAL ENGINEER

BINDING EDGE

PORT OF TACOMA FILE: C:\Users\USJV675558\WSP O365\NW Maritime Projects - Projects\30902693\004\CADD\Dwgs\02_C03-01

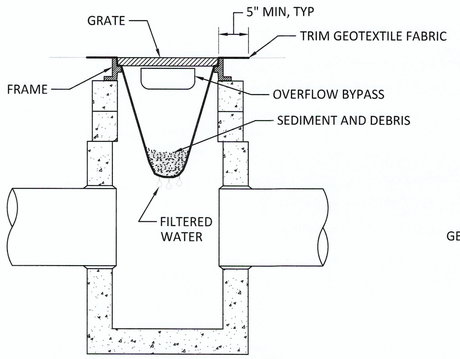

CROSS SECTION

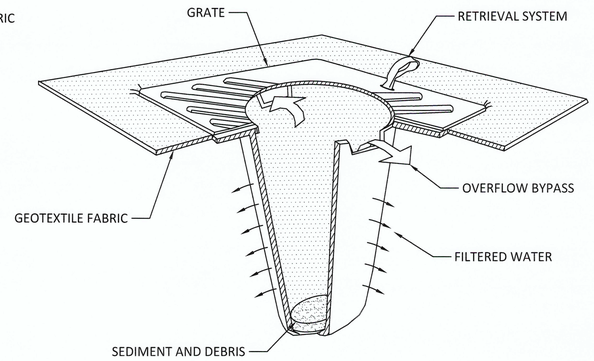

ISOMETRIC VIEW

INLET PROTECTION NOTES:

1. ACCUMULATED SEDIMENT ON OR AROUND A PROTECTED INLET SHALL BE REMOVED IMMEDIATELY. SEDIMENT SHALL NOT BE REMOVED BY FLUSHING.
2. PERFORM REGULAR MAINTENANCE AND MONITOR SEDIMENT ACCUMULATION AFTER EACH RAINFALL EVENT. REPLACE CATCH BASIN INSERT WHEN THE SEDIMENT HAS FILLED ONE-THIRD OF THE AVAILABLE STORAGE. THE INSERT SHALL BE REPLACED AT LEAST MONTHLY, OR AS DIRECTED BY THE ENGINEER.
3. DISPOSE OF MATERIAL AT AN APPROPRIATE LANDFILL FACILITY.

1 / C2.0 **INLET PROTECTION**
SCALE: NTS

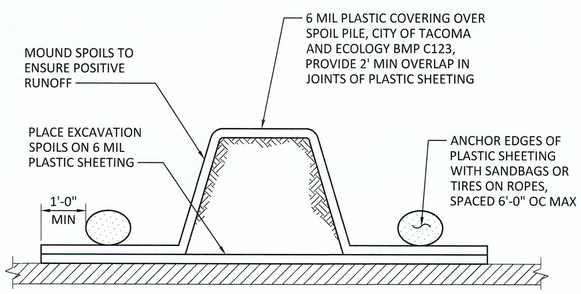

2 / - **DETAIL - TYP EXCAVATION SPOILS PROTECTION**
SCALE: NTS

EROSION CONTROL NOTES:

1. IMPLEMENTATION OF THESE EROSION & SEDIMENT CONTROL PLANS AND THE CONSTRUCTION, MAINTENANCE, REPLACEMENT, AND UPGRADING OF THE TESC FACILITIES SHOWN ON THE PLANS SHALL BE THE CONTRACTOR'S RESPONSIBILITY UNTIL ALL CONSTRUCTION IS COMPLETED AND APPROVED.
2. CONTRACTOR SHALL PREPARE PROJECT SPECIFIC CONSTRUCTION STORM WATER POLLUTION PREVENTION PLAN (SWPPP). THE CONTRACTOR SHALL COMPLY WITH, MAINTAIN, AND MODIFY AS NEEDED THE APPROVED CONSTRUCTION SWPPP. REFER TO SPECIFICATION FOR SWPPP SHORT FORM.
3. THE TESC FACILITIES SHOWN ON THIS PLAN AND LISTED IN THE TESC NOTES ON C2.0 ARE THE MINIMUM REQUIREMENTS ANTICIPATED FOR SITE CONDITIONS. DURING THE CONSTRUCTION PERIOD, THESE TESC FACILITIES SHALL BE UPGRADED AS NEEDED, FOR UNEXPECTED STORM EVENTS AND TO ENSURE THAT SEDIMENT AND SEDIMENT-LADEN WATER DOES NOT LEAVE THE SITE.
4. ON-SITE EROSION CONTROL MEASURES SHALL BE INSTALLED PRIOR TO THE START OF WORK AND SHALL BE MAINTAINED DURING AND AFTER EXCAVATION AND GRADING OPERATIONS TO THE APPROVAL OF THE ENGINEER.
5. THE TESC FACILITIES SHOWN ON THIS PLAN SHALL BE CONSTRUCTED IN SUCH A MANNER AS TO ENSURE THAT SEDIMENT-LADEN WATER DOES NOT ENTER THE PORT DRAINAGE SYSTEM, ADJACENT WATERWAYS, OR VIOLATE APPLICABLE WATER QUALITY STANDARDS.
6. THE TESC FACILITIES SHALL BE INSPECTED DAILY BY THE CONTRACTOR AND MAINTAINED AS NECESSARY TO ENSURE THEIR CONTINUED FUNCTION.
7. ALL FACILITIES SHALL BE MAINTAINED ON SITE BY SWEEPING OR OTHER MEANS TO PREVENT DEBRIS, DUST AND MUD FROM ACCUMULATING ON THE PAVED SURFACES. PROVIDE PLASTIC SHEETING FOR MATERIAL STOCKPILES AS SHOWN BY DETAIL 3 ON THIS DRAWING.
8. NON-COMPLIANCE WITH THE EROSION CONTROL AND WATER QUALITY REQUIREMENTS MAY RESULT IN A TEMPORARY STOP-WORK ORDER UNTIL SAID EROSION CONTROL MEASURES ARE FUNCTIONAL. TEMPORARY STOP-WORK ORDER SHALL NOT MODIFY CONTRACT SCHEDULE AND INCUR NO ADDITIONAL COST TO THE PORT.
9. THE CONTRACTOR SHALL REMOVE MATERIAL DROPPED, WASHED OR TRACKED FROM VEHICLES OUTSIDE OF THE DESIGNATED PROJECT LIMITS OR INTO THE EXISTING STORM DRAINAGE SYSTEM. DEBRIS SHALL NOT BE WASHED INTO THE STORM DRAINAGE SYSTEM, OR INTO THE ADJACENT WATERWAYS.
10. DEWATERING ACTIVITIES SHALL BE PERFORMED IN A MANNER THAT ENSURES NO SILT-LADEN WATER ENTERS ADJACENT WATERWAYS OR STORM DRAINAGE SYSTEM.
11. NOTIFY ENGINEER UPON INSTALLATION AND AFTER REMOVAL OF EROSION CONTROL MEASURES. THE NAME AND PHONE NUMBER OF THE CERTIFIED EROSION CONTROL LEAD SHALL BE PROVIDED TO THE ENGINEER AND REDLINED ON THE PLANS PRIOR TO THE EROSION CONTROL INSPECTION.
12. ALL TESC FEATURES INCLUDING CATCH BASIN INLET PROTECTION INSTALLED ON-SITE SHALL BE REMOVED AFTER SUBSTANTIAL COMPLETION .
13. REMOVE ANY SEDIMENT THAT MAY HAVE ENTERED THE STORM SYSTEM ONCE THE SITE IS PERMANENTLY STABILIZED. THE CLEANING AND REMOVAL OPERATION SHALL NOT FLUSH SEDIMENT DOWNSTREAM.
14. IN ADDITION TO INLET PROTECTION SHOWN ON PLAN, INSTALL INLET PROTECTION ON ALL EXISTING CATCH BASINS THAT ARE DISCOVERED IN FIELD WITHIN 100 FEET OF THE CONTRACTORS WORK AREA OR THAT WILL BE IMPACTED BY CONTRACTOR ACTIVITY EVEN IF THEY ARE NOT SHOWN ON PLANS.

FOR BID

C4.0
11 OF 28

PORT OF TACOMA
WEST SITCUM MAIN SUBSTATIONS REPLACEMENT
TESC DETAILS & NOTES

APPROVED:
CHKDATE 8/26/25 CE
DIRECTOR ENG. DATE CHECKED BY DATE
PRINTED BY: USJV675558 Aug 26, 2025 PROJ. ENGR JV 8/26/25
PORT ADDRESS: 1675 W LINCOLN AVE. TACOMA, WA 98421-2300

CONT/CONS: PA000000140 TOWNSHIP: 21 RANGE: 3 SECTION: 34
M. ID: 201178.01 DAT-HRZ: NAD 83-07 VERT: NOS TIDAL (MLLW=0.0)
PHASE: 100% DESIGN SUBMITTAL PARCEL: DRAWING SCALE: AS SHOWN

Port of Tacoma
P.O. BOX 1837 TACOMA, WA 98401 (253)383-5841

WSP USA Inc.
1201 Pacific Avenue
Suite 500
Tacoma, WA 98402
TEL: (206) 431-2000
FAX: (206) 431-2250

MARK:	REVISION:	BY:	APPR:	DATE:

JOSHUA J. VOECKS, STATE OF WASHINGTON, 27008, REGISTERED PROFESSIONAL ENGINEER

NOTES:

1. SEE NOTE 1 AND 2 ON C3.0 AND C3.1 FOR SURFACE RESTORATION.
2. CONDUIT MARKER TAPE NOT SHOWN. PLACE AS DIRECTED ON "E" SERIES SHEETS.
3. TRENCH SAFETY SYSTEMS (SHORING) SHALL BE USED AS APPLICABLE AND AS DESCRIBED BY WAC 296-155 TO MAINTAIN VERTICAL SIDES FOR TRENCH AND MINIMIZE AMOUNT OF EXCAVATION, BACKFILL, AND SURFACE REPAIR. LAYING BACK TRENCH EXCAVATION (FLATTER SIDE SLOPES) IN LIEU OF SHORING SHALL NOT BE ALLOWED.

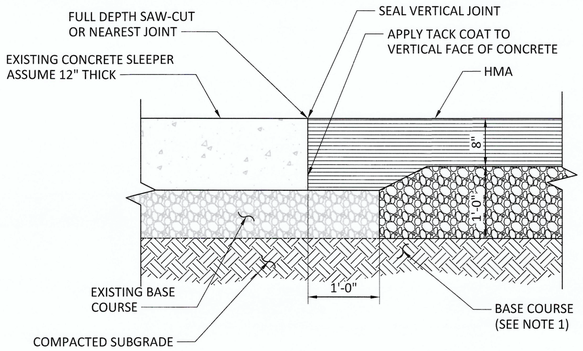

1 / C3.0 / C3.1

DETAIL - PAVEMENT EDGE

SCALE: NTS

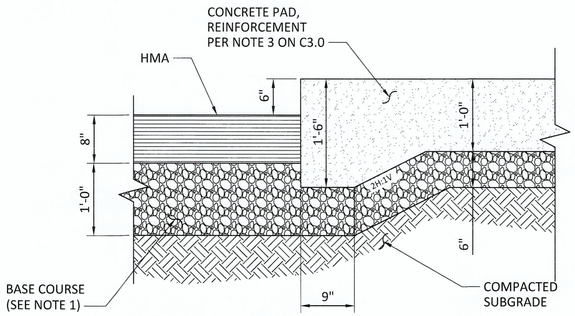

2 / C3.0 / C3.1

DETAIL - CONCRETE PAD

SCALE: NTS

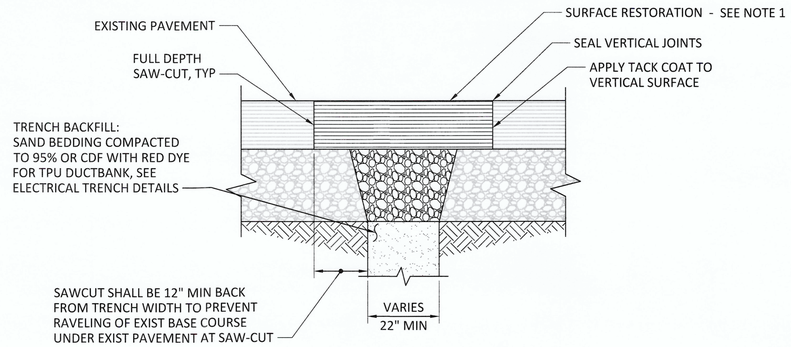

3 / C3.0 / C3.1

DETAIL - PAVEMENT RESTORATION

SCALE: NTS

FOR BID

C4.1

12 OF 28

CONT/CONS: PA000000140 | TOWNSHIP: 21 | RANGE: 3 | SECTION: 34
M. ID: 2011178.01 | DAT-HRZ: NAD 83-07 | VERT: NOS TIDAL (MLLW=0.0)
PHASE: 100% DESIGN SUBMITTAL | PARCEL: | DRAWING SCALE: AS SHOWN

PORT OF TACOMA
WEST SITCUM MAIN SUBSTATIONS REPLACEMENT
CIVIL DETAILS & SECTIONS
SHEET 1

APPROVED:
CHKDATE
DIRECTOR ENG. DATE

CE 8/26/25
CHECKED BY DATE
JV 8/26/25
PROJ. ENGR DATE
USJV675558 Aug 26, 2025
PRINTED BY:
1675 W LINCOLN AVE.
PORT ADDRESS: TACOMA, WA 98421-2300

Port of Tacoma
P.O. BOX 1837 TACOMA, WA 98401 (253)383-5841
WSP USA Inc.
720 Pacific Avenue
Suite 550
Tacoma, WA 98402
TEL: (206) 431-2300
FAX: (206) 431-2320

MARK:	REVISION:	BY:	APPR:	DATE:

JOSHUA J. VOSCKY, STATE OF WASHINGTON, 57808, REGISTERED PROFESSIONAL ENGINEER

BINDING EDGE

PORT OF TACOMA FILE: C:\Users\USJV675558\WSP O365\NW Maritime Projects - Projects\30902693\004\CADD\Dwgs\02_C04-01

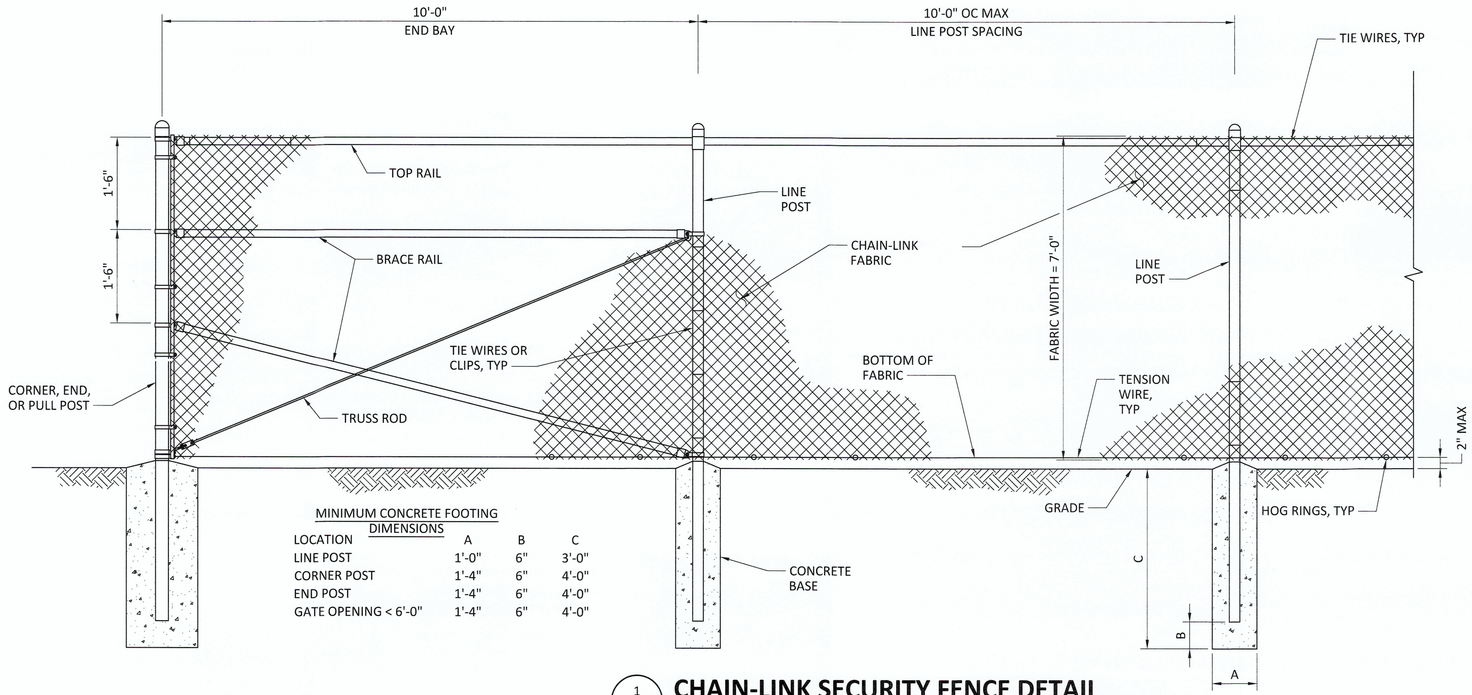

MINIMUM CONCRETE FOOTING DIMENSIONS

LOCATION	A	B	C
LINE POST	1'-0"	6"	3'-0"
CORNER POST	1'-4"	6"	4'-0"
END POST	1'-4"	6"	4'-0"
GATE OPENING < 6'-0"	1'-4"	6"	4'-0"

1 / C3.0 **CHAIN-LINK SECURITY FENCE DETAIL**
SCALE: NTS
C3.1

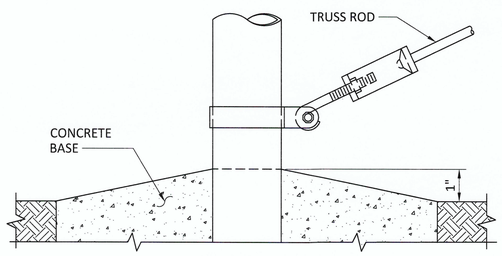

TRUSS ROD AND BAND

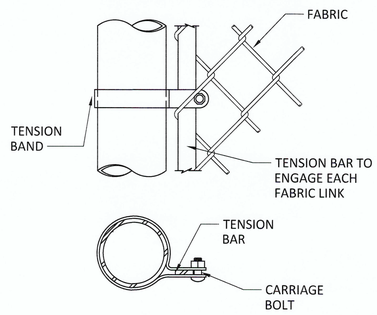

END OR GATE POST DETAIL

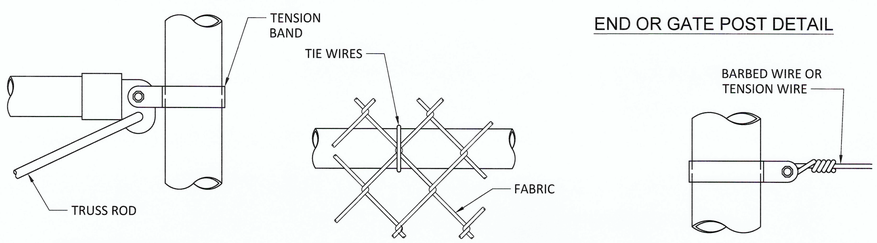

ROUND POST — TOP OR BRACE RAIL ATTACHMENT — TENSION BAND DETAIL

2 / C3.0 **FASTENING DETAILS**
SCALE: NTS
C3.1

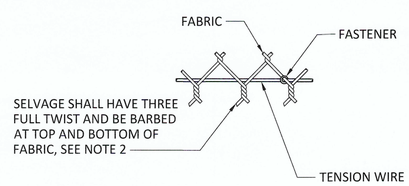

3 / C3.0 **DETAIL - FABRIC AND TENSION WIRE**
SCALE: NTS
C3.1

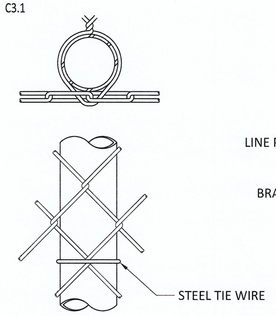

ROUND POST

4 / C3.0 **LINE POST ATTACHMENTS**
SCALE: NTS
C3.1

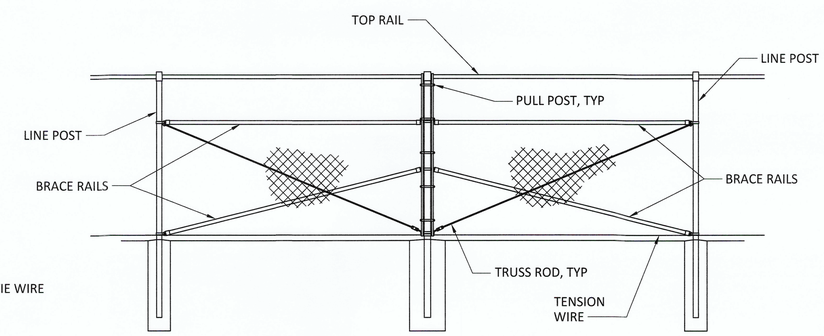

5 / C3.0 **DETAIL - BRACE PANEL**
SCALE: NTS
C3.1

NOTES:

1. FENCE GROUNDING: GROUNDING ROD WITH GROUNDING RESISTANCE NOT MORE THAN 25 ohm SHALL BE PROVIDED ON EACH SIDE (INSIDE AND OUTSIDE) OF EVERY FENCE GATE. FENCE GATE POSTS SHALL BE BONDED TO EACH OTHER AND TO THE FENCE POST. BONDING AND GROUNDING SHALL BE PER NFPA 780. ALL UNDERGROUND CONNECTIONS SHALL BE BY EXOTHERMIC WELD EXCEPT THE CONNECTION REMOVED FOR TESTING. REFER TO ELECTRICAL DRAWINGS FOR DETAILS.
2. SEE SPECIFICATIONS FOR TYPICAL SIZES OF FENCING COMPONENTS, AND GROUNDING AND BONDING REQUIREMENTS FOR FENCING AND GATES.
3. ANGLE OF BOTTOM RAIL OF GATE SHALL BE MODIFIED AS REQUIRED TO CONFORM TO SLOPE OF FINISH GRADE, AND TO ENSURE GAP BETWEEN BOTTOM OF GATE AND TOP OF FINISH GRADE DOES NOT EXCEED TWO (2) INCHES.
4. ALL METAL SHALL BE HOT-DIP GALVANIZED.
5. FENCE FABRIC SHALL BE SECURED WITH WIRE TIES EVERY 15"±2" ALONG TENSION WIRES, POST, AND ALONG TOP, AND BOTTOM RAILS.
6. GATES, HINGES, AND ALL MOVING PARTS SHALL BE CONSTRUCTED OF HIGHEST QUALITY HARDWARE AVAILABLE BY MANUFACTURER FOR HIGH FREQUENCY OF OPENING AND CLOSING CYCLES.
7. TENSION WIRES SHALL BE PLACED WITHIN LIMITS OF FIRST FULL FABRIC WEAVE.
8. SECURE ALL FASTENING AND HINGE HARDWARE ASSOCIATED WITH GATES IN PLACE BY PEENING OR WELDING. HINGES SHALL BE MADE TAMPER-PROOF BY THE ADDITION OF WELDED SECURITY PLATES OR BY REVERSING THE DIRECTION OF THE HINGE PINS.
9. HINGES SHALL BE SECURED TO GATE POST AND GATE FRAME TO ASSURE THEY WILL NOT TWIST OR TURN UNDER WEIGHT AND ACTION OF GATE.
10. WIRE TIES ARE TO BE TWISTED IN A PARTICULAR DIRECTION/MANNER. REFER TO SPECIFICATIONS.
11. TYPICAL SIZES OF FENCING COMPONENTS:
    A. TERMINAL POST (END, CORNER & PULLING POST): 4.000" OD (9.12 LB/FT)
    B. LINE POST: 2.875" OD (5.79 LB/FT)
    C. BRACE: 1.660" OD (2.27 LB/FT)
    D. TRUSS RODS: 3/8"
    E. FENCE FABRIC: 9 GA
    F. TENSION WIRE: 6 GA
    G. TIES: 9 GA
12. WIRE TIES, RAILS, POSTS, AND BRACES SHALL BE CONSTRUCTED ON THE SECURE SIDE OF THE FENCE ALIGNMENT. CHAIN-LINK FABRIC SHALL BE PLACED ON THE SIDE OPPOSITE THE SECURE AREA.
13. CONTRACTOR TO PLACE SIGNAGE ON OUTSIDE OF FENCE THAT MATCHES EXISTING SIGNAGE (SIZE, LETTER HEIGHT, COLOR, ETC) AT SUBSTATIONS 1 AND 3. SEE C5.0 FOR EXAMPLES OF EXISTING SIGNAGE. SUBMIT SIGNS AND SIGN LOCATIONS FOR ENGINEER APPROVAL.

FOR BID

C4.2
13 OF 28

PORT OF TACOMA
WEST SITCUM MAIN SUBSTATIONS REPLACEMENT
CIVIL DETAILS
SHEET 2

CONT/CONS: PA000000140 | TOWNSHIP: 21 | RANGE: 3 | SECTION: 34
M. ID: 201178.01 | DAT-HRZ: NAD 83-07 | VERT: NOS TIDAL (MLLW=0.0)
PHASE: 100% DESIGN SUBMITTAL | PARCEL: | DRAWING SCALE: AS SHOWN

APPROVED:
CHKDATE 8/26/25 CHECKED BY DATE CE
DIRECTOR ENG. 8/26/25 DATE PROJ. ENGR JV
PRINTED BY: USJV675558 Aug 26, 2025
PORT ADDRESS: 1675 W LINCOLN AVE. TACOMA, WA 98421-2300

Port of Tacoma
P.O. BOX 1837 TACOMA, WA 98401 (253)383-5841

WSP USA Inc.
2601 Pacific Avenue
Suite 550
Tacoma, WA 98402
TEL: (206) 431-2000
FAX: (206) 431-2250

MARK:	REVISION:	BY:	APPR:	DATE:

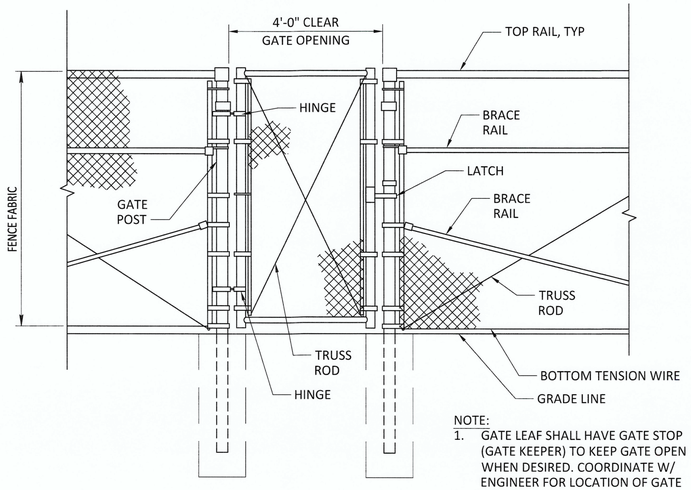

NOTE:
1. GATE LEAF SHALL HAVE GATE STOP (GATE KEEPER) TO KEEP GATE OPEN WHEN DESIRED. COORDINATE W/ ENGINEER FOR LOCATION OF GATE STOPS AT EACH LOCATION.

1 / C3.0 DETAIL - PERSONNEL GATE
SCALE: NTS

C3.1

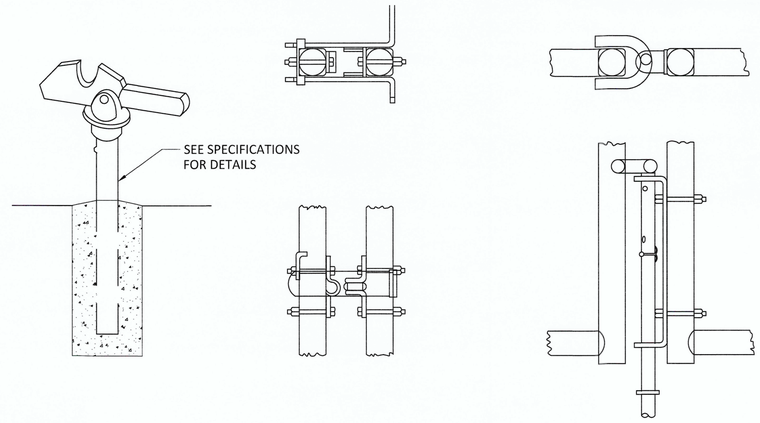

GATE STOP
(TO HOLD GATE OPEN)

LATCH ASSEMBLY

DROP ROD ASSEMBLY

2 / C3.0 DETAIL - SWING GATE DETAILS
SCALE: NTS

C3.1

NOTES:

1. SEE NOTES ON C4.2.
2. PER ASTM F552, TWISTED END BARBED SELVAGE SHALL BE MADE BY TWISTING ADJACENT PAIRS OF WIRE ENDS TOGETHER IN A CLOSE HELIX OF 1-1/2 MACHINE TURNS, WHICH IS EQUIVALENT TO 3 FULL TWISTS, AND CUTTING THE WIRE ENDS AT AN ANGLE. WIRE ENDS BEYOND THE TWIST SHALL BE MIN 1/4" LONG

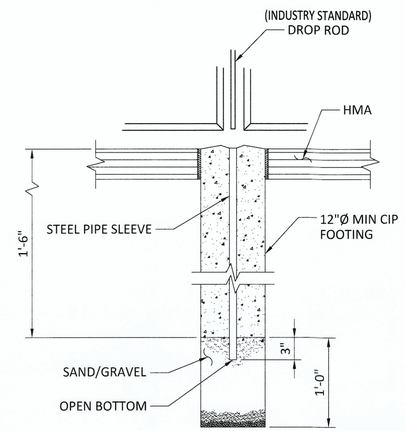

3 / - DETAIL - DROP ROD FOUNDATION
SCALE: NTS

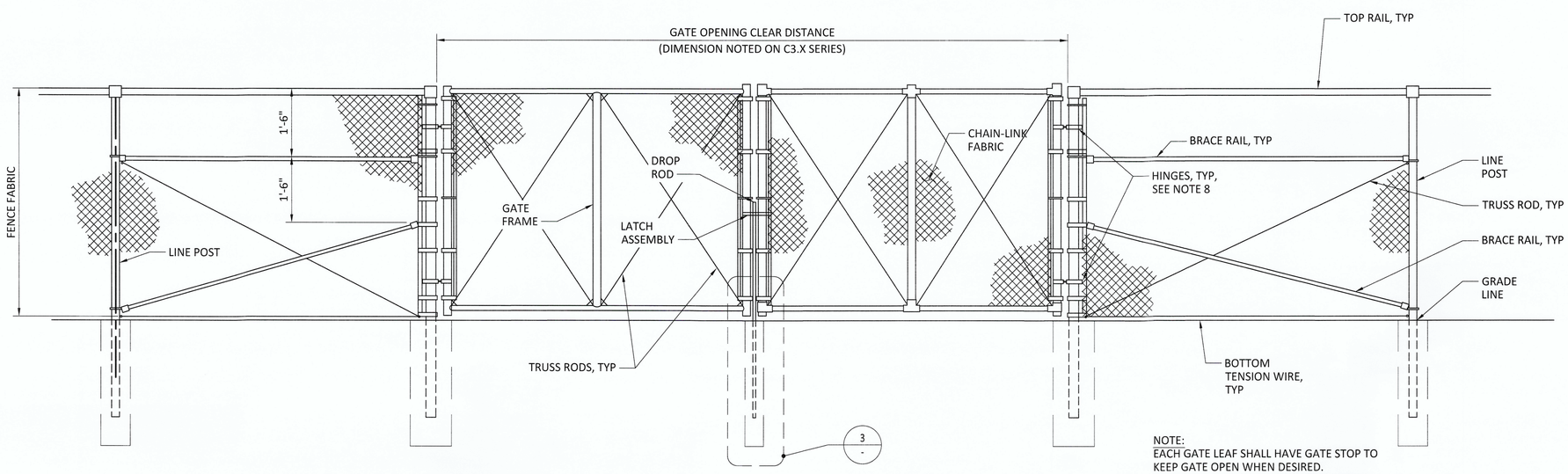

NOTE:
EACH GATE LEAF SHALL HAVE GATE STOP TO KEEP GATE OPEN WHEN DESIRED. COORDINATE W/ENGINEER FOR LOCATION OF GATE STOPS AT EACH LOCATION.

4 / 3.0 DETAIL - DOUBLE SWING GATE
SCALE: NTS

FOR BID

C4.3
14 OF 28

PORT OF TACOMA
WEST SITCUM MAIN SUBSTATIONS REPLACEMENT
CIVIL DETAILS
SHEET 3

APPROVED:
CHKDATE
DIRECTOR ENG:

CONT/CONS: PA000000140	TOWNSHIP: 21	RANGE: 3	SECTION: 34
M. ID: 201178.01	DAT-HRZ: NAD 83-07	VERT: NOS TIDAL (MLLW=0.0)	
PHASE: 100% DESIGN SUBMITTAL	PARCEL:	DRAWING SCALE: AS SHOWN	

CE 8/26/25 CHECKED BY DATE
JV 8/26/25 PROJ. ENGR DATE
PRINTED BY: USJV675558 Aug 26, 2025
PORT ADDRESS: 1675 W LINCOLN AVE. TACOMA, WA 98421-2300

Port of Tacoma
P.O. BOX 1837 TACOMA, WA 98401 (253)383-5841

WSP USA Inc.
1201 Pacific Avenue
Suite 950
Tacoma, WA 98402
TEL: (206) 431-2300
FAX: (206) 431-2250

MARK:	REVISION:	BY:	APPR:	DATE:

BINDING EDGE

PORT OF TACOMA FILE: C:\Users\USJV675558\WSP O365\NW Maritime Projects - Projects\30902693\004\CADD\Dwgs\02_C04-03

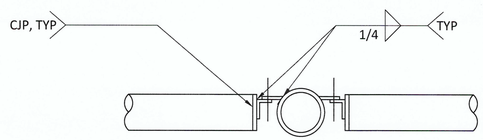

PLAN

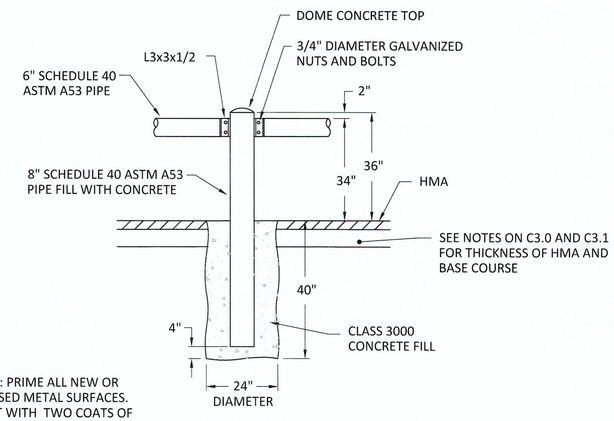

NOTE: PRIME ALL NEW OR EXPOSED METAL SURFACES. PAINT WITH TWO COATS OF "SAFETY YELLOW".

ELEVATION

1 / C3.0 — DETAIL - CONCRETE BOLLARD - BOLTED GUARDRAIL

C3.1

SCALE: NTS

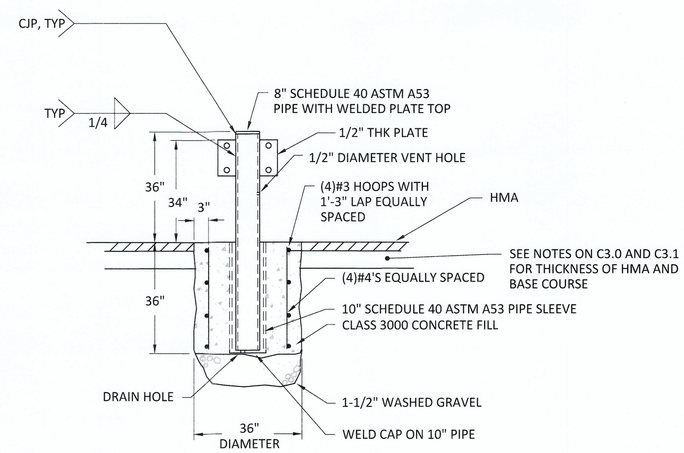

2 / C3.0 — DETAIL - REMOVABLE GUARD POST

C3.1

SCALE: NTS

FOR BID

C4.4
15 OF 28

PORT OF TACOMA
WEST SITCUM MAIN SUBSTATIONS REPLACEMENT
CIVIL DETAILS
SHEET 4

APPROVED:
CHKDATE 8/26/25 CHECKED BY DATE
DIRECTOR ENG. 8/26/25 PROJ. ENGR DATE
PRINTED BY: JV
PORT ADDRESS: 1675 W LINCOLN AVE. TACOMA, WA 98421-2300

CONT/CONS: PA000000140 | TOWNSHIP: 21 | RANGE: 3 | SECTION: 34
M. ID: 201178.01 | DAT-HRZ: NAD 83-07 | VERT: NOS TIDAL (MLLW=0.0)
PHASE: 100% DESIGN SUBMITTAL | PARCEL: | DRAWING SCALE: AS SHOWN

Port of Tacoma
P.O. BOX 1837 TACOMA, WA 98401 (253)383-5841

WSP USA Inc.
1201 Pacific Avenue
Suite 950
Tacoma, WA 98402
TEL: (206) 431-2300
FAX: (206) 431-2250

MARK:	REVISION:	BY:	APPR:	DATE:

BINDING EDGE

PORT OF TACOMA FILE: C:\Users\USJV675558\WSP O365\NW Maritime Projects - Projects\309026930\04\CADD\Dwgs\02_C04-04

1 / C3.0 **PHOTO - RESTRICTED AREA SIGN**

C3.1

2 / C3.0 **PHOTO - SUBSTATION SIGN**

C3.1

3 / C3.0 **PHOTO - ASSET SIGN**

C3.1

4 / C3.0 **PHOTO - SIGN PLACEMENT EXAMPLE**

C3.1

FOR BID

C5.0
16 OF 28

PORT OF TACOMA
WEST SITCUM MAIN SUBSTATIONS REPLACEMENT
PHOTOGRAPHS

APPROVED:
CHKDATE
DIRECTOR ENG. DATE

CE	8/26/25	CHECKED BY	DATE
JV	8/26/25	PROJ. ENGR	DATE

PRINTED BY: USJV675558 Aug 26, 2025
PORT ADDRESS: 1675 W LINCOLN AVE.
TACOMA, WA 98421-2300

CONT/CONS: PA00000140 | TOWNSHIP: 21 | RANGE: 3 | SECTION: 34
M. ID: 201178.01 | DAT-HRZ: NAD 83-07 | VERT: NOS TIDAL (MLLW=0.0)
PHASE: 100% DESIGN SUBMITTAL | PARCEL: | DRAWING SCALE: AS SHOWN

WSP USA Inc.
1201 Pacific Avenue
Suite 550
Tacoma, WA 98402
TEL: (206) 431-2300
FAX: (206) 431-2250

JOSHUA J. LOECKS
STATE OF WASHINGTON
REGISTERED PROFESSIONAL ENGINEER

Port of Tacoma
P.O. BOX 1837 TACOMA, WA 98401 (253)383-5841

MARK:	REVISION:	BY:	APPR:	DATE:

BINDING EDGE

PORT OF TACOMA FILE: C:\Users\USJV675558\WSP O365\NW Maritime Projects - Projects\30902693\004\CADD\Dwgs\02_C05-00

GENERAL NOTES:

1. DO NOT SCALE ELECTRICAL DRAWINGS. REFER TO CIVIL AND STRUCTURAL DRAWINGS TO COORDINATE THE EXACT LOCATION OF ALL ELECTRICAL EQUIPMENT, STRUCTURES, VAULTS, CONDUITS, ETC. NOTIFY ENGINEER IN THE EVENT OF A CONFLICT.
2. SEE DRAWING E6.0 FOR CONDUIT AND CONDUCTOR SCHEDULE. NOT ALL CONDUIT AND CONDUCTORS ARE INDICATED ON THE SCHEDULES. SEE SITE PLANS AND DETAILS FOR ADDITIONAL CONDUIT AND CONDUCTOR REQUIREMENTS. METALLIC CONDUITS, COUPLINGS AND JOINTS OF METALLIC CONDUITS EMBEDDED IN CONCRETE, CDF, EARTH OR ASPHALT SHALL BE 1/2 LAP TAPED OR OTHERWISE MADE WATERTIGHT TO PREVENT INTRUSION OF MORTAR, WATER OR OTHER MATERIALS. TEST CONDUIT FOR ABSENCE OF ANY BLOCKAGE PRIOR TO AND WITHIN 24 HOURS OF COMPLETING A CONCRETE OR CDF POUR OR ASPHALT PAVING. ALL METAL CONDUIT EXPOSED ABOVE GRADE SHALL BE PVC COATED OR PRIMED AND PAINTED TWO(2) COATS BLACK OVER GALVANIZE.
3. CONTRACTOR SHALL INCLUDE IN THE BID ALL COSTS TO HAVE A DEPARTMENT OF LABOR AND INDUSTRIES APPROVED FIRM TO FIELD EVALUATE THE INSTALLATION, SAFETY, AND COMPLIANCE REQUIRED PER TACOMA POWER ELECTRICAL INSPECTION AND/OR PER WAC 296-46B-901 FOR ANY EQUIPMENT SPECIFIED OR FURNISHED NOT UL LABELED.
4. THERE IS ADDITIONAL ELECTRICAL WORK SHOWN ON THE CIVIL AND STRUCTURAL DRAWINGS AND DESCRIBED IN THE SPECIFICATIONS. EXTENSIVE COORDINATION IS REQUIRED BY THE CONTRACTOR WITH GOVERNING AUTHORITIES, OTHER CONTRACTORS WORKING ON SITE AND POT. CONTRACTOR SHALL REVIEW ALL DRAWINGS AND SPECIFICATION SECTIONS AND INCLUDE COSTS FOR ALL COORDINATION AND RELATED WORK IN THE BID.
5. FOR EXCAVATIONS IN EXISTING ASPHALT AREAS FOR POWER AND COMMUNICATIONS WORK, THE CONTRACTOR SHALL SAWCUT, EXCAVATE, HAND DIG, BACKFILL, COMPACT AND PATCH ASPHALT PER THE SPECIFICATIONS. LIMITS OF PAVEMENT DEMOLITION AND RESTORATION SHALL BE AS REQUIRED BY CIVIL AND TO SAFELY PERFORM THE POWER AND COMMUNICATIONS INSTALLATIONS. PAVEMENT PATCHING SHALL BE PER CIVIL/ STRUCTURAL REQUIREMENTS.
6. SEE CIVIL DRAWINGS FOR SITE EQUIPMENT DEMOLITION, EXISTING AND NEW BELOW GRADE UTILITIES. CONTRACTOR SHALL FIELD COORDINATE EXISTING UTILITIES, UNDERGROUND WORK BY OTHER CONTRACTORS WITH ROUTING OF NEW ELECTRICAL UNDERGROUND INFRASTRUCTURE. CALL FOR, IDENTIFY AND MAINTAIN EXISTING UTILITY LOCATES PRIOR TO ANY EXCAVATIONS.
7. CONTRACTOR SHALL PROVIDE PULL TAPE IN ALL CONDUIT RUNS WITH CONDUCTORS, COMMUNICATIONS CABLES OR EMPTY. PROVIDE COMPLETE LOOP OF ALL POWER AND COMMUNICATIONS CABLES AROUND ALL FOUR(4) WALLS OF VAULTS PRIOR TO CABLE EXITING VAULT. FOR POWER CONDUCTORS UPSIZED TO REDUCE VOLTAGE DROP AND LARGER THAN TERMINATION LUGS CONTRACTOR SHALL PROVIDE TERMINAL PINS (FINGER SPLICES) TO ACCOMMODATE TERMINATION.
8. THIS SITE IS CURRENTLY SERVED BY TACOMA PUBLIC UTILITIES (TPU). CONTRACTOR SHALL COORDINATE NEW SERVICE WORK WITH TPU, SCHEDULE PRE-CONSTRUCTION SITE MEETING AND INCLUDE OWNER WORK REQUIREMENTS IDENTIFIED IN TPU LETTER OF AGREEMENT, APPROVED TPU CONSTRUCTION DRAWINGS AND PER TPU STANDARDS AND REQUIREMENTS.
9. CONTRACTOR SHALL INCLUDE 40 HOURS IN THEIR BID FOR FIELD VERIFICATION OF EXISTING BRANCH CIRCUIT ROUTING OUT OF EXISTING SUBSTATION(S). FIELD VERIFY INTERCEPT LOCATION OF EACH EXISTING BRANCH PRIOR TO SETTING OF NEW POWER VAULTS AND INSTALLATION OF CONDUIT.
10. ALL POWER SHUTDOWNS SHALL BE COORDINATED WITH TACOMA POWER, TERMINAL OPERATOR AND PORT OF TACOMA MINIMUM 2-WEEKS PRIOR TO REQUESTED SHUTDOWN WINDOW.

SYMBOLS LEGEND:

XXXX — BURIED POWER CONDUITS IN TRENCH. SEE CONDUIT AND CONDUCTOR SCHEDULE SHEET E6.0.

XX — ELECTRICAL VAULT(S), MINIMUM 125KIP RATING. SEE VAULT SCHEDULE SHEET E5.0 FOR IDENTIFICATION AND ADDITIONAL REQUIREMENTS,

ELECTRICAL POWER PANEL.

DUPLEX 120V, 20A. WP = GFI RECEPTACLE IN NEMA 3R CAST BOX WITH "IN USE" NEMA 3R COVER.

GROUND PER NEC

EQUIPMENT CONNECTION. PROVIDE PER NEC AND MANUFACTURER'S REQUIREMENTS AND/OR RECOMMENDATIONS.

J — CAST JUNCTION BOX

XXX — AVAILABLE FAULT CURRENT.

A/B — DETAIL/SECTION IDENTIFICATION: A = DETAIL/SECTION LETTER, B = SHEET NUMBER WHERE DETAIL/SECTION IS TAKEN FROM OR DRAWN.

ABBREVIATION LEGEND:

A	=	AMPS
AFG	=	ABOVE FINISHED GRADE
AIC	=	FAULT CURRENT RATING
BP	=	EXISTING BURIED POWER
BPO	=	EXISTING BURIED FIBER
C	=	COMMUNICATIONS
CDF	=	CONTROLLED DENSITY FILL
CKT	=	CIRCUIT
CO	=	CONDUIT ONLY
CV	=	COMMUNICATIONS VAULT
EX	=	EXISTING
FOB	=	FIBER OPTIC
FT	=	FEET
GFR	=	GROUND FAULT SWITCH
GRD	=	GROUND
HMA	=	HOT MIX ASPHALT
ID	=	IDENTIFICATION
MIN	=	MINIMUM
N	=	NEW
NEC	=	NATIONAL ELECTRICAL CODE
NEMA	=	NATIONAL ELECTRICAL MANUFACTURER'S ASSOCIATION
NIC	=	NOT IN CONTRACT
PV	=	POWER VAULT
POT	=	PORT OF TACOMA ENGINEER
POTM	=	PORT OF TACOMA FACILITIES MAINENANCE
POTIT	=	PORT OF TACOMA INFORMATION TECHNOLOGY DEPARTMENT
PVCRS	=	PVC COATED RIGID STEEL CONDUIT
RPX	=	REEFER POWER, X = NUMBER IDENTIFICATION
SD	=	SECONDARY 600V DISTRIBUTION
SDV	=	SECONDARY POWER VAULT
SL	=	SITE LIGHTING
SP	=	SPARE CONDUIT
TPU	=	TACOMA PUBLIC UTILITIES
TPUV	=	TACOMA PUBLIC UTILITIES VAULT
W	=	WITH
WAC	=	WASHINGTON ADMINISTRATIVE CODE
WP	=	WEATHERPROOF

FOR BID

E1.0
17 OF 28

PORT OF TACOMA
WEST SITCUM MAIN SUBSTATIONS REPLACEMENT
ELECTRICAL SYMBOLS LEGEND

APPROVED: DIRECTOR ENG. DATE 8/26/25

SH 8/26/25 CHECKED BY DATE
SK 8/26/25 PROJ. ENGR DATE
PRINTED BY: Scott K Aug 26, 2025
PORT ADDRESS: 1675 W LINCOLN AVE. TACOMA, WA 98421-2300

CONT/CONS: PA000000140 | TOWNSHIP: 21 | RANGE: 03 | SECTION: 34
M. ID: 201178.01 | DAT-HRZ: NAD 83-07 | VERT: NOS TIDAL (MLLW=0.0)
PHASE: FOR BID | PARCEL: | DRAWING SCALE: AS SHOWN

Port of Tacoma
P.O. BOX 1837 TACOMA, WA 98401 (253)383-5841

CROSS ENGINEERS, INC
3020 N.E. 47 Way, Tacoma, WA 98422
Phone: (253) 312-0118
Job Number: 23-144
info@crossengineers.com

MARK:	REVISION:	BY:	APPR:	DATE:

STEVEN L. HUBBS, STATE OF WASHINGTON, REGISTERED PROFESSIONAL ENGINEER, 40600 — 8/26/25

BINDING EDGE

SUBSTATION #1 AREA OF WORK. SEE PARTIAL SITE PLAN, SHEET E2.1

SUBS TION #3 AREA F WORK. SEE PARTIAL SITE PLAN, SHEET E2.2

OVERALL ELECTRICAL SITE PLAN

SCALE: 1"=200'-0"

NOTE: IF DRAWING IS LESS THEN 22"x34", IT IS A REDUCED SET

200' 0' 200' 400'

SCALE: 1"=200'

TRUE NORTH

PROJECT NORTH

FOR BID

E2.0

18 OF 28

CONT/CONS: PA000000140 | TOWNSHIP: 21 | RANGE: 03 | SECTION: 34

M. ID: 201178.01 | DAT-HRZ: NAD 83-07 | VERT: NOS TIDAL (MLLW=0.0)

PHASE: FOR BID | PARCEL: | DRAWING SCALE: AS SHOWN

PORT OF TACOMA

WEST SITCUM MAIN SUBSTATIONS REPLACEMENT

OVERALL ELECTRIAL SITE PLAN

	SH	8/26/25
	CHECKED BY	DATE
	SK	8/26/25
DIRECTOR ENG.	DATE	
PRINTED BY:	PROJ. ENGR	DATE
PORT ADDRESS: 1675 W LINCOLN AVE.		
TACOMA, WA 98421-2300		

APPROVED:

STEVEN L. HUBBS — STATE OF WASHINGTON — REGISTERED PROFESSIONAL ENGINEER — 8/26/25

CROSS ENGINEERS, INC
922 Mill Ave. N. Way
Tacoma, Washington
info@crossengineers.com
Phone: (253) 756-0118
Job Number: 22-144

Port of Tacoma
P.O. BOX 1837 TACOMA, WA 98401 (253)383-5841

MARK:	REVISION:	BY:	APPR:	DATE:

PORT OF TACOMA FILE: C:\Users\SCOTTK~1.CRO\AppData\Local\Temp\AcPublish_24784\23-144-E20

BINDING EDGE

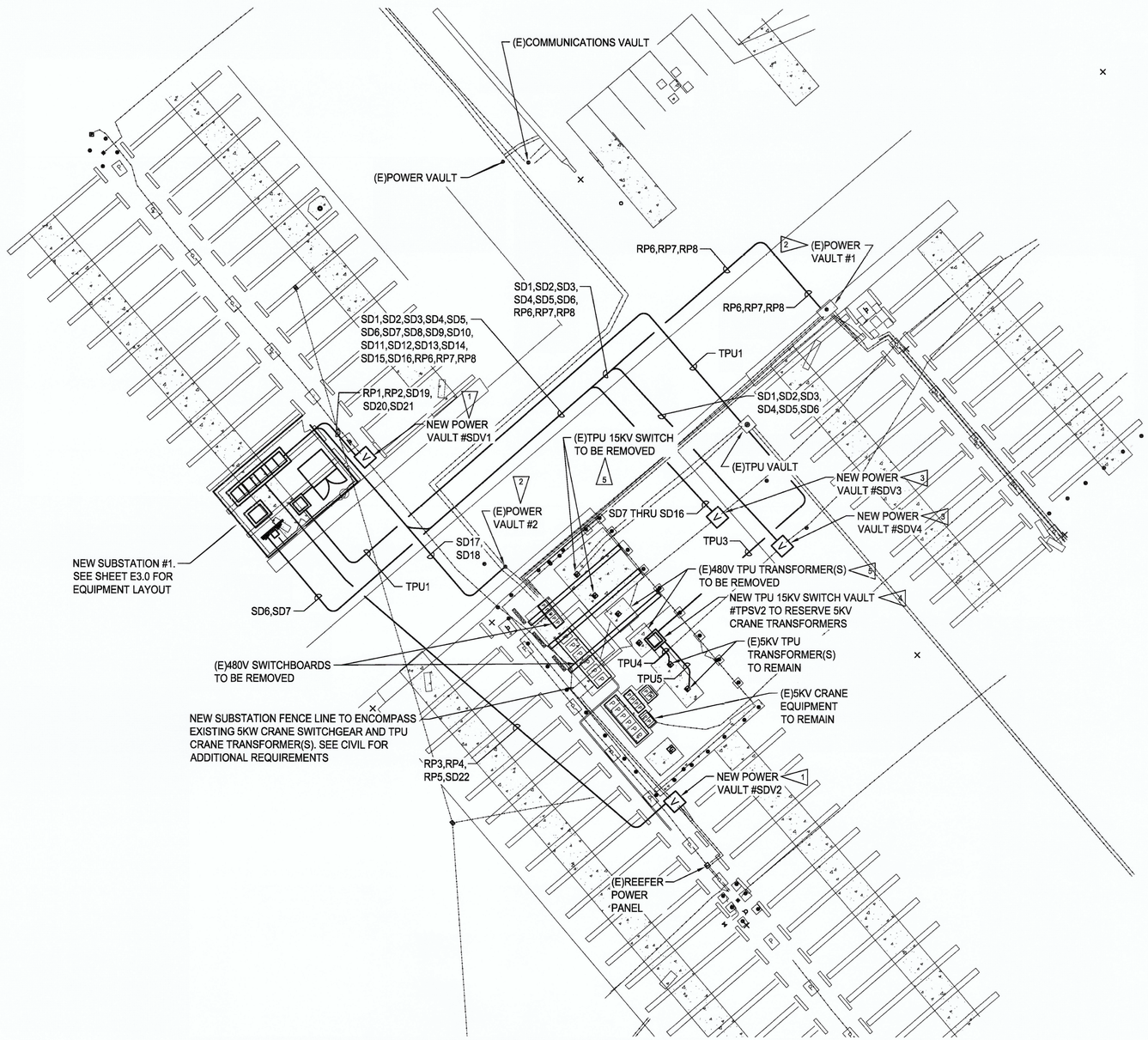

PARTIAL ELECTRICAL SITE PLAN – SUBSTATION #1

SCALE: 1"=20'-0"

ELECTRICAL NOTES:

1. CONTRACTOR SHALL INTERCEPT EXISTING POWER CIRCUITS AND PROVIDE NEW CUSTOM 444, MINIMUM 125KIP, POWER VAULT. PROVIDE WATERTIGHT SPLICES OF NEW AND EXISTING CONDUCTORS WITHIN VAULT.
2. CONTRACTOR SHALL INTERCEPT EXISTING POWER CIRCUITS WITHIN EXISTING VAULT AND PROVIDE WATERTIGHT SPLICING OF EXISTING AND NEW CONDUCTORS.
3. CONTRACTOR SHALL INTERCEPT EXISTING POWER CIRCUITS AND PROVIDE NEW CUSTOM 577, MINIMUM 125KIP, POWER VAULT. PROVIDE WATERTIGHT SPLICES OF NEW AND EXISTING CONDUCTORS WITHIN VAULT.
4. CONTRACTOR SHALL COORDINATE WITH TACOMA POWER AND PROVIDE NEW CONNECTIONS TO EXISTING 5KV TPU TRANSFORMER(S) TO REMAIN SERVING CRANES. COORDINATE SHUTDOWN OF CRANES WITH TERMINAL OPERATOR AND PORT OF TACOMA.
5. COORDINATE REMOVAL OF 15KV TPU SWITCHES AND TRANSFORMERS WITH TACOMA POWER. VAULTS SHALL HAVE LIDS REMOVED, FILLED WITH SAND AND NEW PAVING PER CIVIL SPECIFICATIONS.

NOTE: IF DRAWING IS LESS THEN 22"x34", IT IS A REDUCED SET

20' 0' 20' 40'

SCALE: 1"=20'

TRUE NORTH

PROJECT NORTH

FOR BID

Port of Tacoma
P.O. BOX 1837 TACOMA, WA 98401 (253)383-5841

CROSS ENGINEERS, INC
3220 N. 30th St. Tacoma, WA 98465
Phone: (253) 759-9118
Job Number: 23-144
info@crossengineers.com

MARK:	REVISION:	BY:	APPR:	DATE:

STEVEN L. HUBBS, STATE OF WASHINGTON, REGISTERED PROFESSIONAL ENGINEER, 8/26/25

APPROVED:

DIRECTOR ENG. DATE

		SH	8/26/25
		CHECKED BY	DATE
		SK	8/26/25
		PROJ. ENGR	DATE
		Scott K Aug 26, 2025	
		1675 W LINCOLN AVE	
		TACOMA, WA 98421-2300	

PRINTED BY:
PORT ADDRESS:

PORT OF TACOMA
WEST SITCUM MAIN SUBSTATIONS REPLACEMENT
PARTIAL ELECTRICAL SITE PLAN - SUBSTATION #1

E2.1
19 OF 28

CONT/CONS: PA000000140	TOWNSHIP: 21	RANGE: 03	SECTION: 34
M. ID: 201178.01	DAT-HRZ: NAD 83-07	VERT: NOS TIDAL (MLLW=0.0)	
PHASE: FOR BID	PARCEL:	DRAWING SCALE: AS SHOWN	

BINDING EDGE

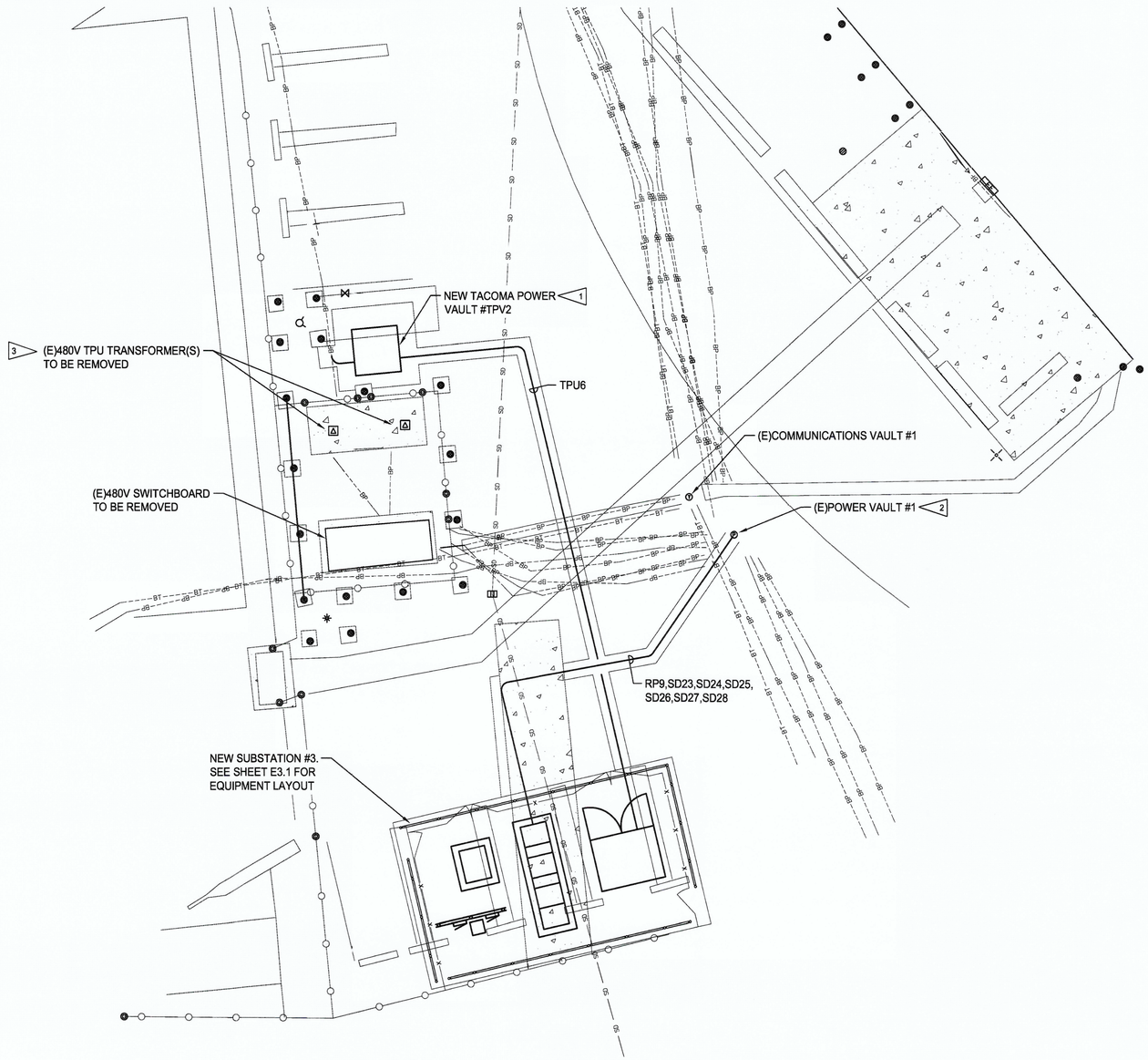

PARTIAL ELECTRICAL SITE PLAN – SUBSTATION #3

SCALE: 1"=10'-0"

ELECTRICAL NOTES:

1. CONTRACTOR SHALL PROVIDE NEW TACOMA POWER VAULT AND COORDINATE INTERCEPTION OF EXISTING TPU CONDUITS WITH TACOMA POWER.
2. CONTRACTOR SHALL INTERCEPT EXISTING POWER CIRCUITS WITHIN EXISTING VAULT AND PROVIDE WATERTIGHT SPLICING OF EXISTING AND NEW CONDUCTORS.
3. COORDINATE REMOVAL OF TPU TRANSFORMERS WITH TACOMA POWER. VAULTS SHALL HAVE LIDS REMOVED, FILLED WITH SAND AND NEW PAVING PER CIVIL SPECIFICATIONS.

NOTE: IF DRAWING IS LESS THEN 22"x34", IT IS A REDUCED SET

10' 0' 10' 20'

SCALE: 1"=10'

TRUE NORTH

PROJECT NORTH

FOR BID

E2.2

20 OF 28

CONT/CONS: PA000000140
M. ID: 201178.01
PHASE: FOR BID

PORT OF TACOMA
WEST SITCUM MAIN SUBSTATIONS REPLACEMENT
PARTIAL ELECTRICAL SITE PLAN - SUBSTATION #3

TOWNSHIP: 21 | RANGE: 03 | SECTION: 34
DAT-HRZ: NAD 83-07 | VERT: NOS TIDAL (MLLW=0.0)
PARCEL: | DRAWING SCALE: AS SHOWN

APPROVED:
DIRECTOR ENG. DATE

SH	8/26/25
CHECKED BY	DATE
SK	8/26/25
PROJ. ENGR	DATE

PRINTED BY: ScottK Aug 26, 2025
PORT ADDRESS: 1675 W LINCOLN AVE.
TACOMA, WA 98421-2300

STEVEN L. HUBBS STATE OF WASHINGTON 40000 REGISTERED PROFESSIONAL ENGINEER 8/26/25

CROSS ENGINEERS, INC
3223 N.E. 2 Way
Tacoma, WA 98445
Phone: (253) 752-2115
Job Number: 23-144
info@crossengineers.com

MARK:	REVISION:	BY:	APPR:	DATE:

Port of Tacoma
P.O. BOX 1837 TACOMA, WA 98401 (253)383-5841

PORT OF TACOMA FILE: C:\Users\SCOTTK~1.CRO\AppData\Local\Temp\AcPublish_24784\23-144-E22

BINDING EDGE

ELECTRICAL NOTES:

1. CONTRACTOR SHALL PROVIDE 8'-0" SECTION OF 3" RIGID GALVANIZED STEEL CONDUIT WITH THREADED END CAP. PROVIDE 8" ROUND x 3'-0" DEEP, 3000 PSI CONCRETE BASE AND EMBED CONDUIT 3'-0" BELOW FINISHED GRADE. TYPICAL OF THREE (3). PAINT TWO (2) COATS SAFETY YELLOW.
2. CONTRACTOR SHALL PROVIDE (6)1-5/8" HOT DIP GALVANIZED STRUT BETWEEN RIGID STEEL CONDUIT POSTS FOR MOUNTING EQUIPMENT. DRILL CONDUIT AND PROVIDE STAINLESS STEEL MOUNTING HARDWARE FOR STRUT AND EQUIPMENT MOUNTING. PAINT TWO (2) COATS SAFETY YELLOW.
3. EXOTHERMIC WELD ALL BELOW GRADE GROUND GRID CONNECTIONS.
4. ALL PIGTAILS TO EQUIPMENT SHOWN SHALL BE #2/0 AWG BARE COPPER GROUND. PIGTAILS SHALL BE EXTENDED 3'-0" ABOVE FINISHED GRADE FOR CONNECTION TO EQUIPMENT.
5. REMOVABLE BOLLARD.

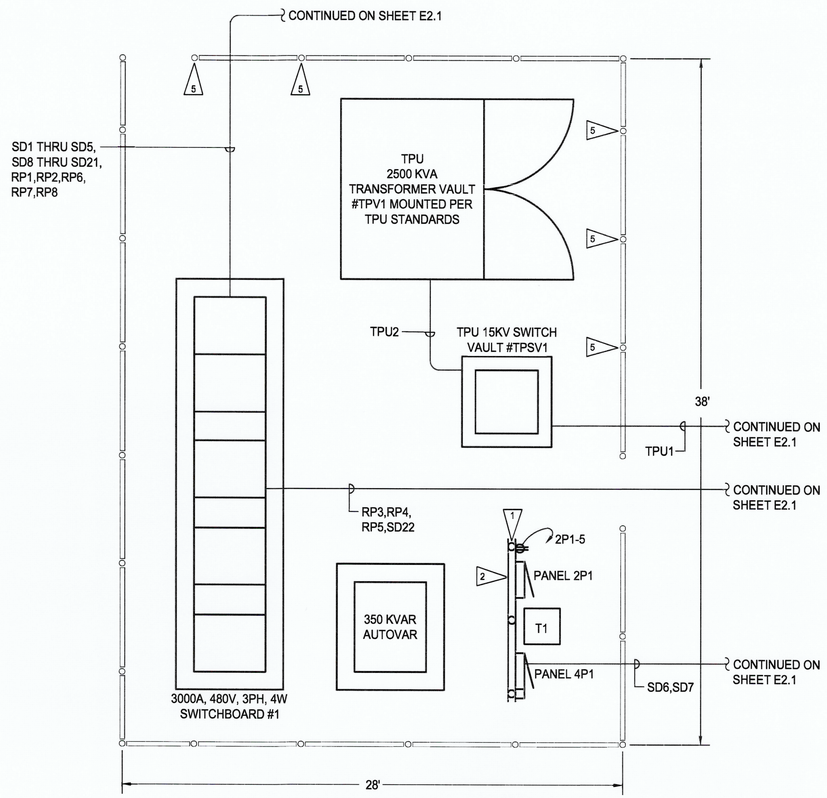

ELECTRICAL SUBSTATION #1 EQUIPMENT LAYOUT

SCALE: 1/4"=1'-0"

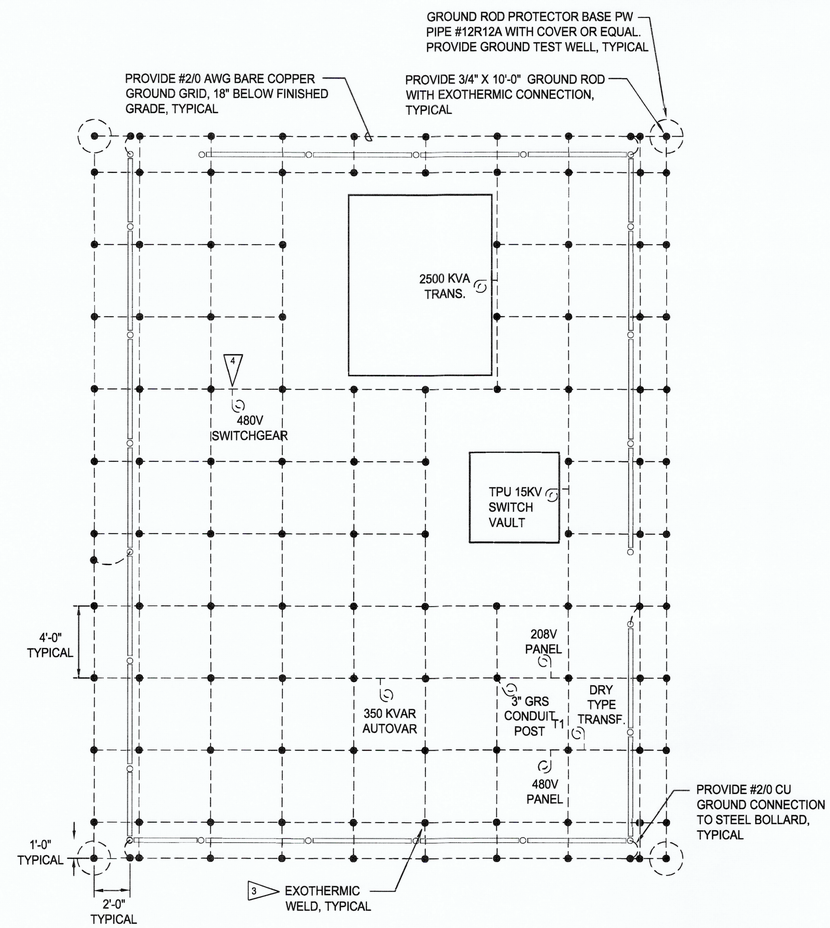

ELECTRICAL SUBSTATION #1 GROUND GRID LAYOUT

SCALE: 1/4"=1'-0"

NOTE: IF DRAWING IS LESS THEN 22"x34", IT IS A REDUCED SET

4' 0' 4' 8'

SCALE: 1/4"=1-0"'

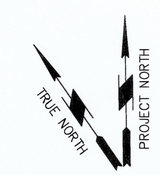

FOR BID

Port of Tacoma
P.O. BOX 1837 TACOMA, WA 98401 (253)383-5841

CROSS ENGINEERS, INC
1519 Mill St. Way
Tacoma, WA 98405
info@crossengineers.com
Phone (253) 759-0118
Job Number: 23-144

MARK:	REVISION:	BY:	APPR:	DATE:

STEVEN L. HUBBS, STATE OF WASHINGTON, REGISTERED PROFESSIONAL ENGINEER, 40360 — 8/26/25

SH	8/26/25	APPROVED:	
CHECKED BY	DATE	DIRECTOR ENG.	DATE
SK	8/26/25	PRINTED BY:	Scott K Aug 26, 2025
PROJ. ENGR	DATE	PORT ADDRESS:	1675 W LINCOLN AVE. TACOMA, WA 98421-2300

PORT OF TACOMA
WEST SITCUM MAIN SUBSTATIONS REPLACEMENT
SUBSTATION #1 ELECTRICAL LAYOUT

TOWNSHIP: 21	RANGE: 03	SECTION: 34	
DAT-HRZ: NAD 83-07	VERT: NGS TIDAL (MLLW=0.0)		
PARCEL:	DRAWING SCALE: AS SHOWN		

E3.0
21 OF 28

CONT/CONS: PA000000140	
M. ID: 201178.01	
PHASE: FOR BID	

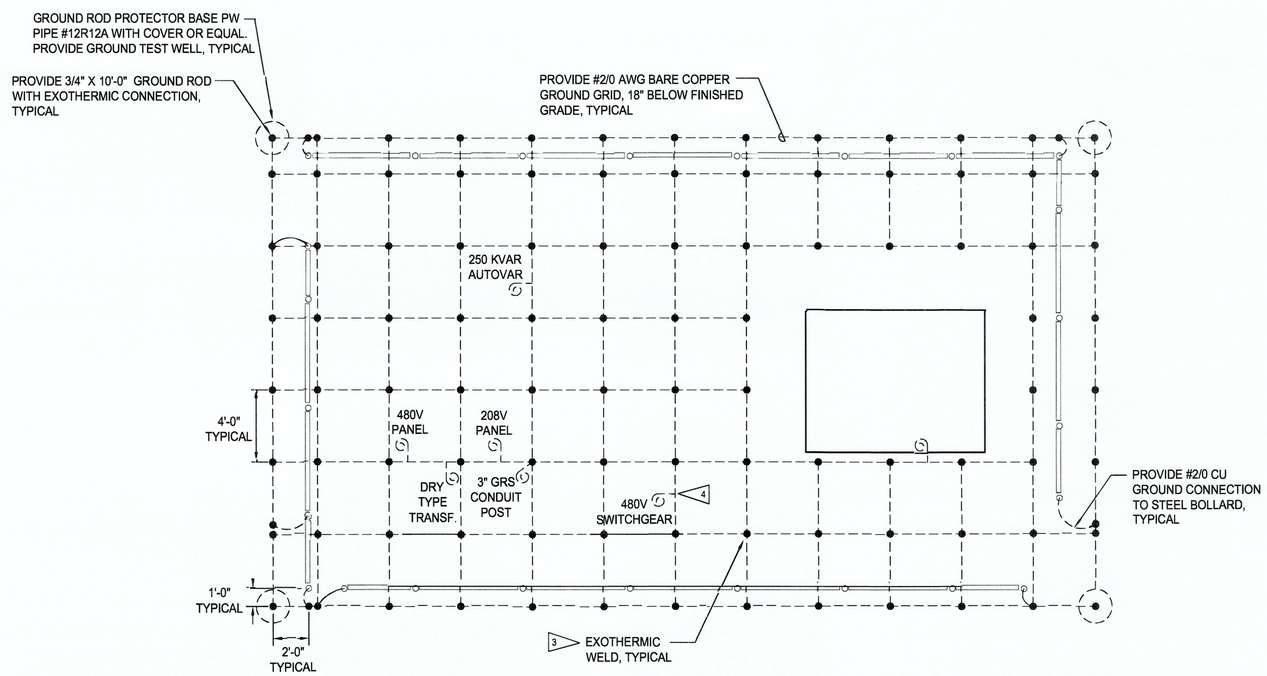

ELECTRICAL SUBSTATION #3 GROUND GRID LAYOUT

SCALE: 1/4"=1'-0"

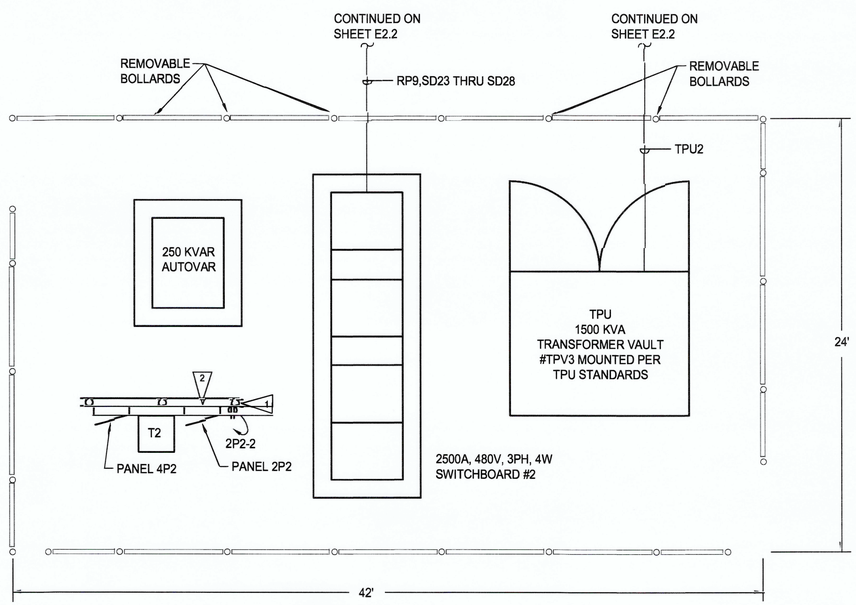

ELECTRICAL SUBSTATION #3 EQUIPMENT LAYOUT

SCALE: 1/4"=1'-0"

ELECTRICAL NOTES:

1. CONTRACTOR PROVIDE 8'-0" SECTION OF 3" RIGID GALVANIZED STEEL CONDUIT WITH THREADED END CAP. PROVIDE 8" ROUND x 3'-0" DEEP, 3000 PSI CONCRETE BASE AND EMBED CONDUIT 3'-0" BELOW FINISHED GRADE. TYPICAL OF THREE (3). PAINT TWO (2) COATS SAFETY YELLOW.
2. CONTRACTOR PROVIDE (6)1-5/8" HOT DIP GALVANIZED STRUT BETWEEN RIGID STEEL CONDUIT POSTS FOR MOUNTING EQUIPMENT. DRILL CONDUIT AND PROVIDE STAINLESS STEEL MOUNTING HARDWARE FOR STRUT AND EQUIPMENT MOUNTING. PAINT TWO (2) COATS SAFETY YELLOW.
3. EXOTHERMIC WELD ALL BELOW GRADE GROUND GRID CONNECTIONS.
4. ALL PIGTAILS TO EQUIPMENT SHOWN SHALL BE #2/0 AWG BARE COPPER GROUND. PIGTAILS SHALL BE EXTENDED 3'-0" ABOVE FINISHED GRADE FOR CONNECTION TO EQUIPMENT.

NOTE: IF DRAWING IS LESS THEN 22"x34", IT IS A REDUCED SET

4' 0' 4' 8'

SCALE: 1/4"=1-0"'

FOR BID

E3.1

22 OF 28

CONT/CONS: PA0000000140
M. ID: 201178.01
PHASE: FOR BID

TOWNSHIP: 21 | RANGE: 03 | SECTION: 34
DAT-HRZ: NAD 83-07 | VERT: NOS TIDAL (MLLW=0.0)
PARCEL: | DRAWING SCALE: AS SHOWN

PORT OF TACOMA
WEST SITCUM MAIN SUBSTATIONS REPLACEMENT
SUBSTATION #2 ELECTRICAL LAYOUT

APPROVED:
DIRECTOR ENG. DATE
PRINTED BY: Scottk Aug 26, 2025
PORT ADDRESS: 1675 W LINCOLN AVE. TACOMA, WA 98421-2300

SH 8/26/25
CHECKED BY DATE
SK 8/26/25
PROJ. ENGR DATE

Port of Tacoma
P.O. BOX 1837 TACOMA, WA 98401 (253)383-5841

CROSS ENGINEERS, INC
823 MLK Jr. Way
Tacoma, WA 98405
info@cross-engineers.com
Phone: (253) 759-0119
Job Number: 23-144

MARK:	REVISION:	BY:	APPR:	DATE:

STEVEN L. HUBBS STATE OF WASHINGTON 40400 REGISTERED PROFESSIONAL ENGINEER 8/26/25

BINDING EDGE

PORT OF TACOMA FILE: C:\Users\SCOTTK~1.CRO\AppData\Local\Temp\AcPublish_24784\23-144-E31

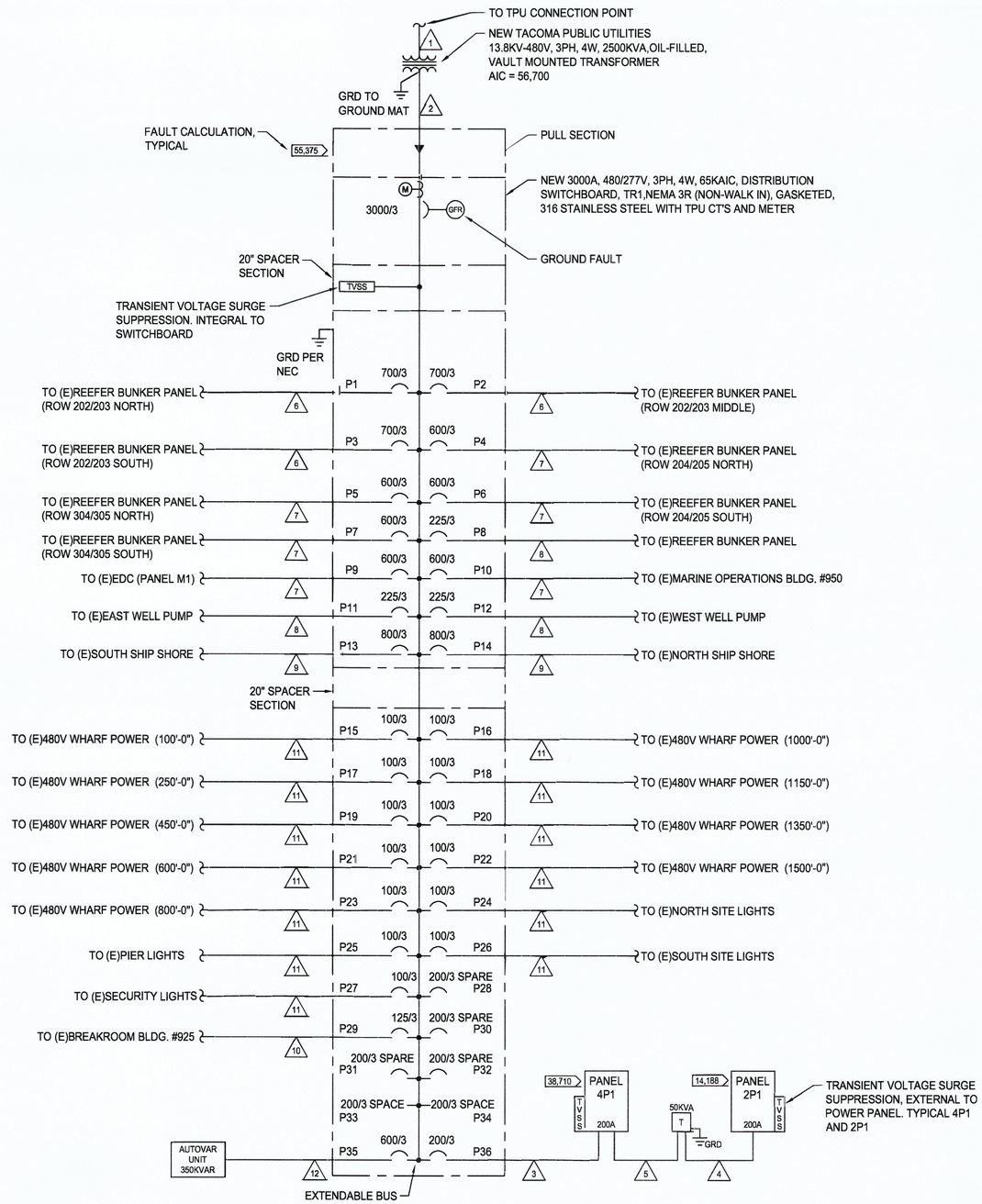

POWER RISER DIAGRAM – SUBSTATION #1

NOT TO SCALE

GENERAL NOTES:

1. NO NEW LOAD ADDED AS PART OF THIS PROJECT. EXISTING SWITCHBOARD BEING REPLACED WITH NEW SWITCHBOARD (SAME VOLTAGE, AMPERAGE AND CIRCUIT BREAKERS).

CONDUIT AND WIRE SCHEDULE

1. 4"C-WIRE BY TPU
2. (8)4"C-(4)#500 KCM CU EACH
3. 2"C-(4)#3/0 CU & (1)#6 CU GRD
4. 2"C-(3)#3/0 CU & (1)#6 CU GRD
5. 1-1/2"C-(3)#2 CU & (1)#8 CU GRD
6. (2)4"C-(4)#500 KCM CU & (1)#1/0 CU GRD EACH
7. (2)3"C-(4)#350 KCM CU & (1)#1 CU GRD EACH
8. 2-1/2"C-(3)#4/0 CU & (1)#4 CU GRD
9. (2)4"C-(3)#600 KCM CU & (1)#1/0 CU GRD EACH
10. 2"C-(4)#2 CU & (1)#8 CU GRD
11. 2"C-(3)#1/0 CU & (1)#4 CU GRD
12. (2)3"C-(4)#350 KCM CU & (1)#1 CU GRD EACH

FOR BID

E4.0

23 OF 28

CONT/CONS: PA0000000140
M. ID: 201178.01
PHASE: FOR BID

PORT OF TACOMA
WEST SITCUM MAIN SUBSTATIONS REPLACEMENT
POWER RISER DIAGRAM - SUBSTATION #1

TOWNSHIP: 21 | RANGE: 03 | SECTION: 34
DAT-HRZ: NAD 83-07 | VERT: NOS TIDAL (MLLW=0.0)
PARCEL: | DRAWING SCALE: AS SHOWN

APPROVED:
DIRECTOR ENG. DATE
PRINTED BY: Scottk Aug 26, 2025
PORT ADDRESS: 1675 W LINCOLN AVE. TACOMA, WA 98421-2300

SH 8/26/25
CHECKED BY DATE
SK 8/26/25
PROJ. ENGR DATE

CROSS ENGINEERS, INC
503 MAX E. Wiley
Tacoma, WA 98406
Phone: (253) 756-0119
Job Number: 23-144
info@crossengineers.com

MARK: | REVISION: | BY: | APPR: | DATE:

Port of Tacoma
P.O. BOX 1837 TACOMA, WA 98401 (253)383-5841

STEVEN L. HUBBS, STATE OF WASHINGTON, REGISTERED PROFESSIONAL ENGINEER
8/26/25

GENERAL NOTES:

1. NO NEW LOAD ADDED AS PART OF THIS PROJECT. EXISTING SWITCHBOARD BEING REPLACED WITH NEW SWITCHBOARD (SAME VOLTAGE, AMPERAGE AND CIRCUIT BREAKERS).

CONDUIT AND WIRE SCHEDULE

1. 4"C-WIRE BY TPU
2. (6)4"C-(4)#600 KCM CU EACH
3. 1-1/2"C-(4)#2 CU & (1)#8 CU GRD
4. 1-1/2"C-(3)#2 CU & (1)#8 CU GRD
5. 1"C-(2)#6 CU & (1)#10 CU GRD
6. (5)4"C-(4)#600 KCM CU & (1)#250 KCM CU GRD EACH
7. (6)3"C-(4)#350 KCM CU & (1)#250 KCM CU GRD EACH
8. (2)4"C-(4)#500 KCM CU & (1)#1/0 CU GRD EACH
9. 4"C-(3)#600 KCM CU & (1)#2 CU GRD
10. 4"C-(4)#600 KCM CU & (1)#2 CU GRD
11. 3"C-(4)#300 KCM CU & (1)#3 CU GRD
12. 1-1/2"C-(4)#4 CU & (1)#8 CU GRD

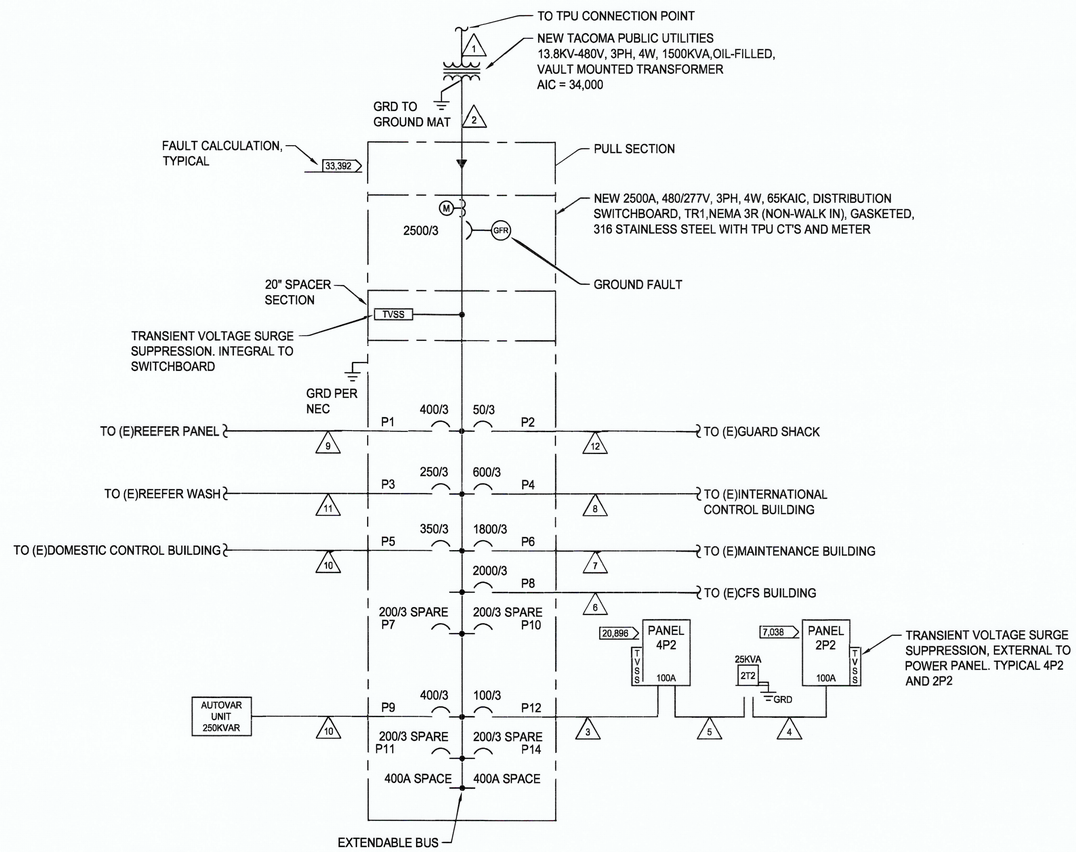

POWER RISER DIAGRAM – SUBSTATION #3

NOT TO SCALE

FOR BID

E4.1

24 OF 28

CONT/CONS: PA000000140 | TOWNSHIP: 21 | RANGE: 03 | SECTION: 34
M. ID: 201178.01 | DAT-HRZ: NAD 83-07 | VERT.: NOS TIDAL (MLLW=0.0)
PHASE: FOR BID | PARCEL: | DRAWING SCALE: AS SHOWN

PORT OF TACOMA
WEST SITCUM MAIN SUBSTATIONS REPLACEMENT
POWER RISER DIAGRAM - SUBSTATION #3

APPROVED:
DIRECTOR ENG. DATE 11/5/25

SH 8/26/25
CHECKED BY DATE
SK 8/26/25
PROJ. ENGR DATE
PRINTED BY: Scottk Aug 26, 2025
PORT ADDRESS: 1675 W LINCOLN AVE. TACOMA, WA 98421-2300

CROSS ENGINEERS, INC
923 MLK Jr. Way
Tacoma, WA 98405
Phone: (253) 759-0118
Fax: (253) 759-0119
info@crossengineers.com

Port of Tacoma
P.O. BOX 1837 TACOMA, WA 98401 (253)383-5841

MARK:	REVISION:	BY:	APPR:	DATE:

STEVEN L. HUBBS, STATE OF WASHINGTON, REGISTERED PROFESSIONAL ENGINEER
8/16/25

BINDING EDGE

PORT OF TACOMA FILE: C:\Users\SCOTTK~1.CRO\AppData\Local\Temp\AcPublish_24784\23-144-E41

NEMA 4X, 316 STAINLESS STEEL

SURAFCE MOUNTING
42,000 AIC

PANEL SCHEDULE

NO. **4P1** | LOCATION: SUBSTATION #1 | SERVING: SITE | 480/277 VOLTS 3PHASE 4WIRE 200 AMPS WITH MAIN LUGS

CKT NO.	LOAD DESCRIPTION	KVA	TRIP AMPS	TRIP AMPS	KVA	LOAD DESCRIPTION	CKT NO.
1	(E)NORTH CAPSTAN	20.75	50	50	20.75	(E)SOUTH CAPSTAN	2
3							4
5			3	3			6
7	PANEL 2P1 VIA	31.20	100			SPACE	8
9	50KVA XFMR		2				10
11	SPACE						12
13							14
15							16
17							18
19							20
21							22
23						SPACE	24
25				30		TVSS	26
27							28
29	SPACE			3			30

REMARKS: .

CONNECTED LOAD: 72.7 KVA 88 AMPS
DEMAND LOAD: 77.9 KVA 94 AMPS

PANEL 4P1 LOAD CALCULATIONS

SERVICE	KVA LOAD		FACTOR	NEC REF.		DEMAND LOAD
LIGHTING	-	X	1.25	220.19(A)(1)	=	-
RECEPTS TO 10KW	.18	X	1.00	220.44	=	.18
RECEPTS OVER 10KW	-	X	0.50	220.44	=	-
MOTORS (LARGEST)	20.75	X	1.25	430.24	=	25.94
MOTORS	20.75	X	1.00	430.24	=	20.75
KITCHEN EQUIP.	-	X	1.00	220.56	=	-
WELDERS	-	X	1.00	630.11(B)	=	-
AIR CONDITIONING	-	X	1.00	220.50	=	-
ELECTRIC HEAT	1.00	X	1.00	220.51	=	1.00
MISCELLANEOUS	30.00	X	1.00		=	30.00
TOTAL CONNECTED	72.7 KVA (88 AMPS)			TOTAL DEMAND		77.9 KVA (94 AMPS)

NEMA 4X, 316 STAINLESS STEEL

SURFACE MOUNTING
22,000 AIC

PANEL SCHEDULE

NO. **2P1** | LOCATION: SUBSTATION #1 | SERVING: SITE | 120/240 VOLTS 1PHASE 3WIRE 200 AMPS WITH 200 MAIN BREAKER

CKT NO.	LOAD DESCRIPTION	KVA	TRIP AMPS	TRIP AMPS	KVA	LOAD DESCRIPTION	CKT NO.
1	(E)CRANE SENDING UNIT	15.00	100	100	15.00	(E)CRANE SENDING UNIT	2
3			2	2			4
5	RECEPTACLE	.18	20	20	1.00	SWITCHBOARD HEATER	6
7	SPARE					SPARE	8
9							10
11							12
13							14
15							16
17							18
19							20
21							22
23							24
25				20		SPARE	26
27				30		TVSS	28
29	SPARE		20	2			30

REMARKS: .

CONNECTED LOAD: 31.2 KVA 130 AMPS
DEMAND LOAD: 31.2 KVA 130 AMPS

PANEL 2P1 LOAD CALCULATIONS

SERVICE	KVA LOAD		FACTOR	NEC REF.		DEMAND LOAD
LIGHTING	-	X	1.25	220.19(A)(1)	=	-
RECEPTS TO 10KW	.18	X	1.00	220.44	=	.18
RECEPTS OVER 10KW	-	X	0.50	220.44	=	-
MOTORS (LARGEST)	-	X	1.25	430.24	=	-
MOTORS	-	X	1.00	430.24	=	-
KITCHEN EQUIP.	-	X	1.00	220.56	=	-
WELDERS	-	X	1.00	630.11(B)	=	-
AIR CONDITIONING	-	X	1.00	220.50	=	-
ELECTRIC HEAT	1.00	X	1.00	220.51	=	1.00
MISCELLANEOUS	30.00	X	1.00		=	30.00
TOTAL CONNECTED	31.2 KVA (130 AMPS)			TOTAL DEMAND		31.2 KVA (130 AMPS)

NEMA 4X, 316 STAINLESS STEEL

SURFACE MOUNTING
25,000 AIC

PANEL SCHEDULE

NO. **4P2** | LOCATION: SUBSTATION #3 | SERVING: SITE | 480/277 VOLTS 3PHASE 4WIRE 100 AMPS WITH MAIN LUGS

CKT NO.	LOAD DESCRIPTION	KVA	TRIP AMPS	TRIP AMPS	KVA	LOAD DESCRIPTION	CKT NO.
1	PANEL 2P2 VIA	1.20	60	20		SPARE	2
3	25KVA XFMR		2				4
5	SPACE						6
7							8
9							10
11				20		SPARE	12
13						SPACE	14
15							16
17							18
19							20
21							22
23						SPACE	24
25				30		TVSS	26
27							28
29	SPACE			3			30

REMARKS: .

CONNECTED LOAD: 1.2 KVA 1 AMPS
DEMAND LOAD: 1.2 KVA 1 AMPS

PANEL 4P2 LOAD CALCULATIONS

SERVICE	KVA LOAD		FACTOR	NEC REF.		DEMAND LOAD
LIGHTING	-	X	1.25	220.19(A)(1)	=	-
RECEPTS TO 10KW	.18	X	1.00	220.44	=	.18
RECEPTS OVER 10KW	-	X	0.50	220.44	=	-
MOTORS (LARGEST)	-	X	1.25	430.24	=	-
MOTORS	-	X	1.00	430.24	=	-
KITCHEN EQUIP.	-	X	1.00	220.56	=	-
WELDERS	-	X	1.00	630.11(B)	=	-
AIR CONDITIONING	-	X	1.00	220.50	=	-
ELECTRIC HEAT	1.00	X	1.00	220.51	=	1.00
MISCELLANEOUS	-	X	1.00		=	-
TOTAL CONNECTED	1.2 KVA (1 AMPS)			TOTAL DEMAND		1.2 KVA (1 AMPS)

NEMA 4X, 316 STAINLESS STEEL

SURFACE MOUNTING
10,000 AIC

PANEL SCHEDULE

NO. **2P2** | LOCATION: SUBSTATION #3 | SERVING: SITE | 120/240 VOLTS 1PHASE 3WIRE 100 AMPS WITH 100 MAIN BREAKER

CKT NO.	LOAD DESCRIPTION	KVA	TRIP AMPS	TRIP AMPS	KVA	LOAD DESCRIPTION	CKT NO.
1	SWITCHBOARD HEATER	1.00	20	20	.18	RECEPTACLE	2
3	SPARE					SPARE	4
5							6
7							8
9							10
11							12
13	SPARE		20	20		SPARE	14
15	SPACE					SPACE	16
17							18
19							20
21							22
23							24
25						SPACE	26
27				30		TVSS	28
29	SPACE			2			30

REMARKS: .

CONNECTED LOAD: 1.2 KVA 5 AMPS
DEMAND LOAD: 1.2 KVA 5 AMPS

PANEL 2P2 LOAD CALCULATIONS

SERVICE	KVA LOAD		FACTOR	NEC REF.		DEMAND LOAD
LIGHTING	-	X	1.25	220.19(A)(1)	=	-
RECEPTS TO 10KW	.18	X	1.00	220.44	=	.18
RECEPTS OVER 10KW	-	X	0.50	220.44	=	-
MOTORS (LARGEST)	-	X	1.25	430.24	=	-
MOTORS	-	X	1.00	430.24	=	-
KITCHEN EQUIP.	-	X	1.00	220.56	=	-
WELDERS	-	X	1.00	630.11(B)	=	-
AIR CONDITIONING	-	X	1.00	220.50	=	-
ELECTRIC HEAT	1.00	X	1.00	220.51	=	1.00
MISCELLANEOUS	-	X	1.00		=	-
TOTAL CONNECTED	1.2 KVA (5 AMPS)			TOTAL DEMAND		1.2 KVA (5 AMPS)

FOR BID

E4.2
25 OF 28

CONT/CONS: PA000000140
M. ID: 201178.01
PHASE: FOR BID

TOWNSHIP: 21 | RANGE: 03 | SECTION: 34
DAT-HRZ: NAD 83-07 | VERT: NOS TIDAL (MLLW=0.0)
PARCEL: | DRAWING SCALE: AS SHOWN

PORT OF TACOMA
WEST SITCUM MAIN SUBSTATIONS REPLACEMENT
PANEL SCHEDULES

APPROVED:
DIRECTOR ENG. DATE
PRINTED BY: Scott K Aug 26, 2025
PORT ADDRESS: 1675 W LINCOLN AVE. TACOMA, WA 98421-2300

SH 8/26/25
CHECKED BY DATE
SK 8/26/25
PROJ. ENGR DATE

Port of Tacoma
P.O. BOX 1837 TACOMA, WA 98401 (253)383-5841

CROSS ENGINEERS, INC
3023 N.E. 4 Way
Tacoma, WA 98445
info@crossengineers.com
Phone: (253) 759-5118
Job Number: 23-144

MARK:	REVISION:	BY:	APPR:	DATE:

STEVEN L. HUBBS, STATE OF WASHINGTON, REGISTERED PROFESSIONAL ENGINEER, 22000
8/26/25

BINDING EDGE

PORT OF TACOMA FILE: C:\Users\SCOTTK~1.CRO\AppData\Local\Temp\AcPublish_24784\23-144-E42

BINDING EDGE

VAULT SCHEDULE

ID	DESCRIPTION	LOADING	NOTES
TPV1,TVP3	CUSTOM 15KV TACOMA POWER PADMOUNT TRANSFORMER VAULT, SELF GROUNDED, 774. REFER TO TPU STANDARDS AND REQUIREMENTS	MINIMUM 125 KIP.	1
TPV2	CUSTOM 15KV POWER VAULT, SEE DETAIL A	MINIMUM 125 KIP.	1 3 4
TPSV1	CUSTOM 15KV TACOMA POWER FEEDER SPLICE VAULT, 684. REEFER TO TPU STANDARDS FOR REQUIREMENTS	MINIMUM 125 KIP.	1
TPSV2	CUSTOM 15KV TACOMA POWER FEEDER SPLICE VAULT, 687. REEFER TO TPU STANDARDS FOR REQUIREMENTS	MINIMUM 125 KIP.	1
SDV1,SDV2	CUSTOM 600V POWER VAULT SEE DETAIL B, THIS SHEET	MINIMUM 125 KIP.	2 3 4
SDV3,SDV4	CUSTOM 600V POWER VAULT SEE DETAIL A, THIS SHEET	MINIMUM 125 KIP.	2 3 4

GENERAL VAULT NOTES:

1. ALL CONDUITS ENTERING OR LEAVING VAULTS SHALL USE TERM-A-DUCTS. PROVIDE REMOVABLE FOAM FILL IN ALL CONDUIT OPENINGS. PROVIDE PULL STRINGS IN ALL EMPTY CONDUITS. CONTRACTOR SHALL PROVIDE CONDUIT LABELS FOR ALL CONDUITS ENTERING AND LEAVING VAULTS. PROVIDE PHENOLIC LABEL ATTACHED TO VAULT WALL WITH TWO (2) PLASTIC INSERTS AND STAINLESS STEEL SCREWS ADJACENT TO EACH CONDUIT. PHENOLIC LABEL SHALL HAVE CONDUIT ID ENGRAVED AS INDICATED ON CONDUIT AND WIRE SCHEDULE DRAWINGS E6.0.
2. SEE SPECIFICATION SECTION 26 71 19 FOR ADDITIONAL VAULT INSTALLATION REQUIREMENTS.
3. ALL POWER CONDUCTORS, COMMUNICATIONS CABLES (FOB AND COPPER) SHALL COMPLETELY LOOP AROUND VAULT WALLS PRIOR TO EXITING VAULT.

VAULT SCHEDULE NOTES:

1. SHOP DRAWING APPROVAL BY TPU REQUIRED.
2. CIVIL SHOP DRAWING REVIEW/APPROVAL REQUIRED.
3. PROVIDE FIELD STAMPED IDENTIFICATION LABEL ON EXPOSED METAL RING AND LID. LABEL SHALL MATCH VAULT IDENTIFICATION ON ELECTRICAL RECORD DRAWINGS PREPARED BY CONTRACTOR.
4. PROVIDE STENCIL PAINTED VAULT KIP RATING ON INSIDE OF VAULT DIRECTLY BELOW LID. MINIMUM 4" HIGH LETTERS.

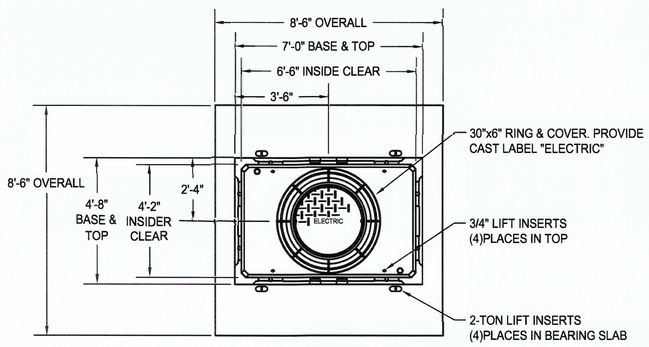

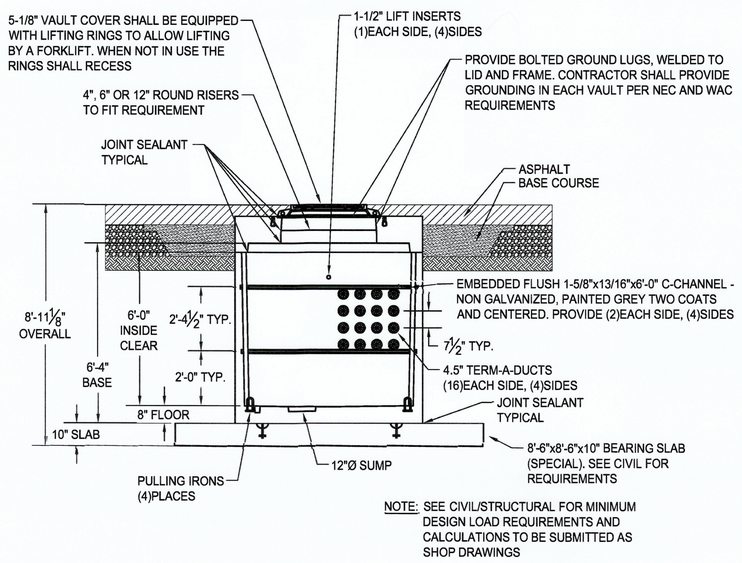

NOTE: SEE CIVIL/STRUCTURAL FOR MINIMUM DESIGN LOAD REQUIREMENTS AND CALCULATIONS TO BE SUBMITTED AS SHOP DRAWINGS

CUSTOM 577 SITE POWER VAULT (A) E5.0

NOT TO SCALE

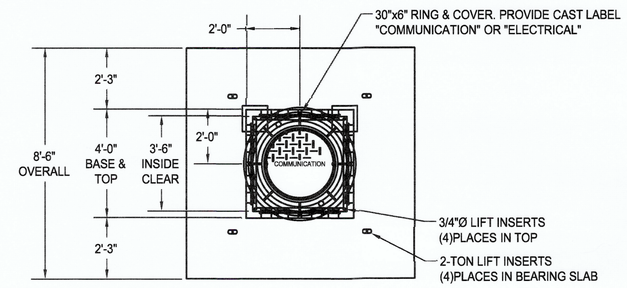

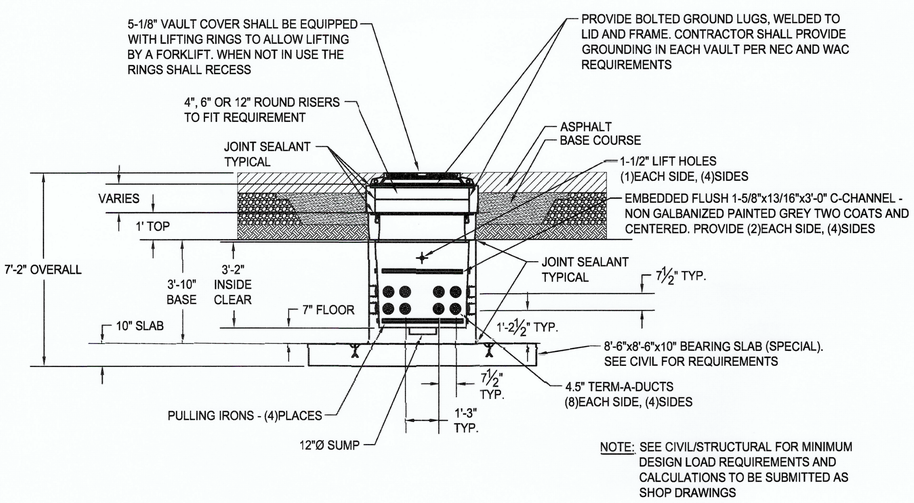

NOTE: SEE CIVIL/STRUCTURAL FOR MINIMUM DESIGN LOAD REQUIREMENTS AND CALCULATIONS TO BE SUBMITTED AS SHOP DRAWINGS

CUSTOM 444 SITE POWER/COMMUNICATIONS VAULT (B) E5.0

NOT TO SCALE

FOR BID

Port of Tacoma
P.O. BOX 1837 TACOMA, WA 98401 (253)383-5841

CROSS ENGINEERS, INC
1502 MLK Jr Way
Tacoma, WA 98405
info@crossengineers.com
Phone: (253) 759-0118
Job Number: 23-144

MARK:	REVISION:	BY:	APPR:	DATE:

STEVEN L. HUBBS, STATE OF WASHINGTON, REGISTERED PROFESSIONAL ENGINEER, 40360 — 8/26/25

APPROVED: 8/26/25

SH	8/26/25	CHECKED BY	DATE
SK	8/26/25	PROJ. ENGR	DATE
Scott Kaye	Aug 26, 2025	DIRECTOR ENG.	DATE

PRINTED BY: Scott K
PORT ADDRESS: 1675 W LINCOLN AVE. TACOMA, WA 98421-2300

PORT OF TACOMA
WEST SITCUM MAIN SUBSTATIONS REPLACEMENT
ELECTRICAL DETAILS

E5.0
26 OF 28

CONT/CONS: PA000000140	TOWNSHIP: 21	RANGE: 03	SECTION: 34
M. ID: 201178.01	DAT-HRZ: NAD 83-07	VERT: NOS TIDAL (MLLW=0.0)	
PHASE: FOR BID	PARCEL:	DRAWING SCALE: AS SHOWN	

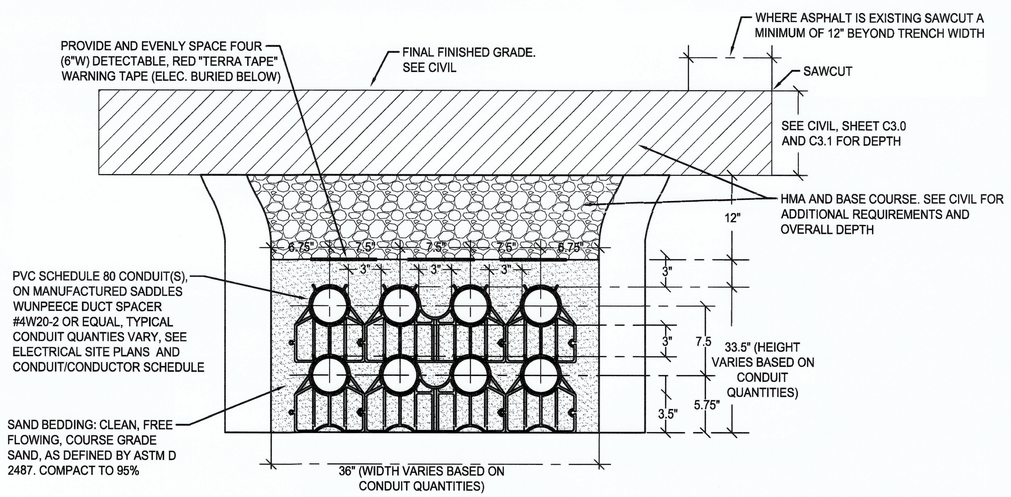

TYPICAL 600V POWER DUCTBANK SECTION (A) E5.1

NOT TO SCALE

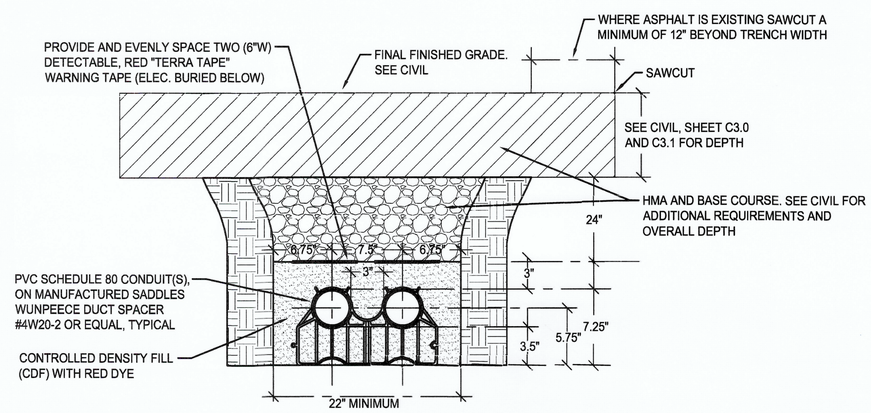

TACOMA POWER DUCTBANK SECTION (B) E5.1

NOT TO SCALE

FOR BID

E5.1

27 OF 28

CONT/CONS: PA000000140
M. ID: 201178.01
PHASE: FOR BID

PORT OF TACOMA

WEST SITCUM MAIN SUBSTATIONS REPLACEMENT

ELECTRICAL DETAILS

TOWNSHIP: 21 | RANGE: 03 | SECTION: 34
DAT-HRZ: NAD 83-07 | VERT: NOS TIDAL (MLLW=0.0)
PARCEL: | DRAWING SCALE: AS SHOWN

APPROVED:

DIRECTOR ENG. DATE

PRINTED BY: Scott K Aug 26, 2025

PORT ADDRESS: 1675 W LINCOLN AVE.
TACOMA, WA 98421-2300

SH 8/26/25
CHECKED BY DATE
SK 8/26/25
PROJ. ENGR DATE

STEVEN L. HUBBS, STATE OF WASHINGTON, 22000, REGISTERED PROFESSIONAL ENGINEER
8/26/25

CROSS ENGINEERS, INC
9220 M.L.K. Way
Tacoma, WA 98445
info@crossengineers.com
Phone: (253) 730-0119
Job Number: 23-144

Port of Tacoma
P.O. BOX 1837 TACOMA, WA 98401 (253)383-5841

MARK:	REVISION:	BY:	APPR:	DATE:

CONDUIT AND CONDUCTOR SCHEDULE

CIRCUIT ID	CONDUIT			CONDUCTORS PER CONDUIT			FROM	TO	REMARKS
	NO.	SIZE	TYPE	NO.	SIZE	TYPE			
TPU1	2	4"	2	-	-	-	(E)TPU VAULT - SHEET E2.1	NEW TPU 15KV SWITCH VAULT #TPSV1	1 3
TPU2	2	4"	2	-	-	-	NEW TPU 15KV SWITCH VAULT #TPSV1	NEW TPU VAULT #TPV1	1 3
TPU3	2	4"	2	-	-	-	(E)TPU VAULT. SEE SHEET E2.1	NEW TPU 15KV SWITCH VAULT #TPSV2	1 3
TPU4	1	4"	2	-	-	-	NEW TPU 15KV SWITCH VAULT #TPSV2	(E)5KV TPU TRANSFORMER	1 3
TPU5	1	4"	2	-	-	-	NEW TPU 15KV SWITCH VAULT #TPSV2	(E)5KV TPU TRANSFORMER	1 3
TPU6	2	4"	2	-	-	-	NEW TPU VAULT #TPV2	NEW TPU VAULT #TPV3	1 3
RP1	2	3"	2	4/1	350/1	XHHW-2	NEW SWITCHBOARD #1	NEW VAULT SDV1 (REEFER BUNKER PANEL - SOUTH)	5
RP2	2	3"	2	4/1	350/1	XHHW-2	NEW SWITCHBOARD #1	NEW VAULT SDV1 (REEFER BUNKER PANEL - NORTH)	5
RP3	2	3"	2	4/1	350/1	XHHW-2	NEW SWITCHBOARD #1	NEW VAULT SDV2 (REEFER BUNKER PANEL - SOUTH)	5
RP4	2	3"	2	4/1	350/1	XHHW-2	NEW SWITCHBOARD #1	NEW VAULT SDV2 (REEFER BUNKER PANEL - NORTH)	5
RP5	1	2-1/2"	2	3/1	0000/4	XHHW-2	NEW SWITCHBOARD #1	NEW VAULT SDV2 (REEFER BUNKER PANEL)	5
RP6	2	4"	2	4/1	500/0	XHHW-2	NEW SWITCHBOARD #1	(E)POWER VAULT #1 - SHEET E2.1 (REEFER PANEL)	5
RP7	2	4"	2	4/1	500/0	XHHW-2	NEW SWITCHBOARD #1	(E)POWER VAULT #1 - SHEET E2.1 (REEFER PANEL)	5
RP8	2	2"	2	4/1	500/0	XHHW-2	NEW SWITCHBOARD #1	(E)POWER VAULT #1 - SHEET E2.1 (REEFER PANEL)	5
RP9	1	4"	2	3/1	600/2	XHHW-2	NEW SWITCHBOARD #2	(E)POWER VAULT #1 - SHEET E2.2 (REEFER PANEL)	5
SD1	1	4"	2	3/1	500/2	XHHW-2	NEW SWITCHBOARD #1	NEW VAULT SDV4 (SHIP SHORE)	5
SD2	1	4"	2	3/1	500/2	XHHW-2	NEW SWITCHBOARD #1	NEW VAULT SDV4 (SHIP SHORE)	5
SD3	2	3"	2	4/1	350/1	XHHW-2	NEW SWITCHBOARD #1	NEW VAULT SDV4 (MARINE OPS. BLDG.)	5
SD4	1	2-1/2"	2	3/1	0000/4	XHHW-2	NEW SWITCHBOARD #1	NEW VAULT SDV4 (EAST WELL PUMP)	5
SD5	1	2-1/2"	2	3/1	0000/4	XHHW-2	NEW SWITCHBOARD #1	NEW VAULT SDV4 (WEST WELL PUMP)	5
SD6	1	1"	2 4	3/1	4/8	XHHW-2	NEW PANEL 4P1	NEW VAULT SDV4 (SOUTH CAPSTAN)	5
SD7	1	1"	2 4	3/1	4/8	XHHW-2	NEW PANEL 4P1	NEW VAULT SDV3 (NORTH CAPSTAN)	5
SD8	1	2"	2	3/1	0/4	XHHW-2	NEW SWITCHBOARD #1	NEW VAULT SDV3 (WHARF POWER)	5
SD9	1	2"	2	3/1	0/4	XHHW-2	NEW SWITCHBOARD #1	NEW VAULT SDV3 (WHARF POWER)	5
SD10	1	2"	2	3/1	0/4	XHHW-2	NEW SWITCHBOARD #1	NEW VAULT SDV3 (WHARF POWER)	5
SD11	1	2"	2	3/1	0/4	XHHW-2	NEW SWITCHBOARD #1	NEW VAULT SDV3 (WHARF POWER)	5
SD12	1	2"	2	3/1	0/4	XHHW-2	NEW SWITCHBOARD #1	NEW VAULT SDV3 (WHARF POWER)	5
SD13	1	2"	2	3/1	0/4	XHHW-2	NEW SWITCHBOARD #1	NEW VAULT SDV3 (WHARF POWER)	5
SD14	1	2"	2	3/1	0/4	XHHW-2	NEW SWITCHBOARD #1	NEW VAULT SDV3 (WHARF POWER)	5
SD15	1	2"	2	3/1	0/4	XHHW-2	NEW SWITCHBOARD #1	NEW VAULT SDV3 (WHARF POWER)	5
SD16	1	2"	2	3/1	0/4	XHHW-2	NEW SWITCHBOARD #1	NEW VAULT SDV3 (WHARF POWER)	5
SD17	2	3"	2	4/1	350/1	XHHW-2	NEW SWITCHBOARD #1	(E)POWER VAULT #2 (EDC - PANEL M1)	5
SD18	1	2"	2	4/1	2/8	XHHW-2	NEW SWITCHBOARD #1	(E)POWER VAULT #2 (BREAKROOM BLDG.)	5
SD19	1	2"	2	3/1	0/4	XHHW-2	NEW SWITCHBOARD #1	NEW VAULT SDV1 (NORTH SITE LIGHTS)	5
SD20	1	2"	2	3/1	0/4	XHHW-2	NEW SWITCHBOARD #1	NEW VAULT SDV1 (PIER LIGHTS)	5
SD21	1	2"	2	3/1	0/4	XHHW-2	NEW SWITCHBOARD #1	NEW VAULT SDV1 (SECURITY LIGHTS)	5
SD22	1	2"	2	3/1	0/4	XHHW-2	NEW SWITCHBOARD #1	NEW VAULT SDV2 (SOUTH SITE LIGHTS)	5
SD23	1	1-1/2"	2	4/1	4/8	XHHW-2	NEW SWITCHBOARD #2	(E)POWER VAULT #1 - SHEET E2.2 (GUARD SHACK)	5
SD24	1	3"	2	4/1	300/3	XHHW-2	NEW SWITCHBOARD #2	(E)POWER VAULT #1 - SHEET E2.2 (REEFER WASH)	5
SD25	1	4"	2	4/1	600/2	XHHW-2	NEW SWITCHBOARD #2	(E)POWER VAULT #1 - SHEET E2.2 (DOMESTIC BLDG.)	5
SD26	2	4"	2	4/1	500/0	XHHW-2	NEW SWITCHBOARD #2	(E)POWER VAULT #1 - SHEET E2.2 (INTERNAT. BLDG.)	5
SD27	6	3"	2	4/1	350/250	XHHW-2	NEW SWITCHBOARD #2	(E)POWER VAULT #1 - SHEET E2.2 (MAINT. BLDG)	5
SD28	5	4"	2	4/1	600/250	XHHW-2	NEW SWITCHBOARD #2	(E)POWER VAULT #1 - SHEET E2.2 (CFS BLDG.)	5

SCHEDULE ABBREVIATION LEGEND:

SD = SECONDARY 600V DISTRIBUTION

RP = REEFER POWER DISTRIBUTION

SDV = SECONDARY POWER VAULT

SP = SPARE CONDUIT

TPU = TACOMA PUBLIC UTILITIES

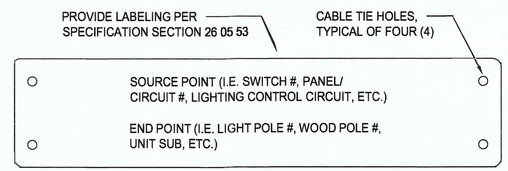

CONDUCTOR IDENTIFICATION LABEL (A / E6.0)

NOT TO SCALE

SCHEDULE NOTES:

1. RED DYE CONCRETE ENCASE.
2. PVC SCHEDULE 80.
3. 13.8KV CABLE FOR TPU.
4. PVC COATED GRS CONDUIT.
5. PROVIDE WATERTIGHT SPLICING OF NEW AND EXISTING CONDUCTORS WITHIN VAULT.

Port of Tacoma
P.O. BOX 1837 TACOMA, WA 98401 (253)383-5841

CROSS ENGINEERS, INC
603 Mill, A Way
Tacoma, Washington
info@crossengineers.com
Phone (253) 759-0118
Job Number: 22-144

MARK:	REVISION:	BY:	APPR:	DATE:

STEVEN L. HUBBS, STATE OF WASHINGTON, REGISTERED PROFESSIONAL ENGINEER, 20020608 — 8/26/25

APPROVED: SH 8/26/25
CHECKED BY SK 8/26/25
DIRECTOR ENG. DATE PROJ. ENGR DATE

PRINTED BY: Scottk Aug 26, 2025
PORT ADDRESS: 1675 W LINCOLN AVE. TACOMA, WA 98421-2300

PORT OF TACOMA
WEST SITCUM MAIN SUBSTATIONS REPLACEMENT
CONDUIT AND CONDUCTOR SCHEDULE

E6.0
28 OF 28

CONT/CONS: PA000000140 | TOWNSHIP: 21 | RANGE: 03 | SECTION: 34
M. ID: 201178.01 | DAT-HRZ: NAD 83-07 | VERT: NOS TIDAL (MLLW=0.0)
PHASE: FOR BID | PARCEL: | DRAWING SCALE: AS SHOWN

FOR BID