Structural Calculations

26-064-01

Port of Tacoma – NIM Gate

1 Sitcum Way,
Tacoma, WA 98421

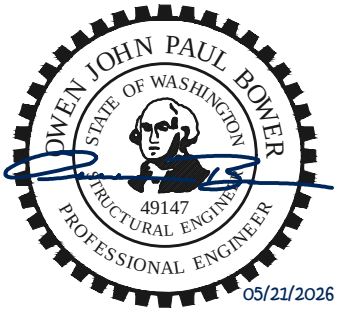

May 21, 2026

1215 Fourth Avenue South, Suite 1200 | Seattle, Washington 98161 | 206-402-5156 | www.lundopsahl.com

LUND OPSAHL

Project PORT OF TACOMA — GATE POST DESIGN | Sheet
Subject 26-064-01
Client | Page No.
Designer | Date 5/15/2026
www.lundopsahl.com | Tel: 206.402.5156

SIZE HSS POST AND FOOTING TO SUPPORT SWINGING FENCE

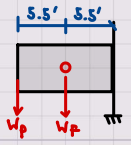

FROM PHOTO, POST IS ≈7.5' TALL, VERIFY FENCE PANEL IS ≈ 11 ft w x 7.667 ft

$W_P = 300$ lbs

$W_F = (1.3\ PSF)(11\ ft)(7.667\ ft) = 109.63\ lb \approx 110\ lb$

$(5.80\ PLF)(11\ ft)(3) = 191.4\ lb \approx 192\ lb$

$W_F = 302\ lb$

2.5"Ø PIPES ASSUMED
2" MESH SIZE OPENING ASSUMED
VERIFY WEIGHTS

$M_{ALL} = (302\ lb)(5.5\ ft) + (300\ lb)(5.5\ ft) = 3311\ lb\text{-}ft$

$M_{ULT} = 1.2(302\ lb)(5.5\ ft) + 1.6(300\ lb)(5.5\ ft) = 4633.2\ ft$

$= 55598.3\ lb\text{-}in$

EQUIVALENT WEIGHT AND MOMENT ARM FOR POST FOOTING
$H = 80/12\ ft = 6.667\ ft$
$P = M/H = 3311\ lb\text{-}ft / 6.667\ ft = 496.65\ lb$

SIZE POST:

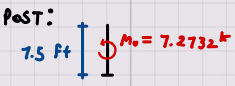

ALL DEFLECTION AT TOP $= \frac{2L}{180} = \frac{2(7.5 \times 12\ in/ft)}{180} = 1.0\ in$

USE AN HSS 4x4x1/4 (SEE PRINTOUT)

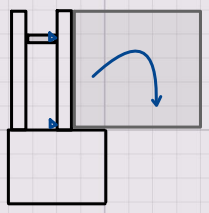

ENSURE WIND OR SEISMIC DONT CONTROL OVER GRAVITY

USING TABLE 9 FROM "CHAIN LINK FENCE WIND DESIGN GUIDE (ASSUMING 2" OD AND #6 GAGE

$C_{F1} = 5.71 \longrightarrow A = 1/5.71 = 0.1751$

$q_z = 0.00256 k_z k_{zt} k_d k_e V^2 = 0.00256(0.57)(1.00)(0.85)(1)(97)^2 = 11.67\ PSF$

USE 16 PSF MIN

$F = q_z G C_F A_F = (16\ PSF)(0.85)(1.42)(0.1751\ A) = 3.38\ PSF$

$B/S = 1.43$ (APPROX) A_F

$F = (11\ ft)(7.667\ ft)(3.38\ PSF) = 285.17\ lb$

$F_P = \frac{0.4(1)(1.078)(302\ lbs)}{(2.5/1)}(1 + 2(80/90)) = 144.69\ lb$

$F_{P\,MIN} = 0.3 S_{DS} I_P W_P = 0.3(1.078)(1.0)(302\ lb) = 97.6668\ lb$

$F_{P\,MAX} = 1.6 S_{DS} I_P W_P = 1.6(1.078)(1.0)(302\ lb) = 520.8896\ lb$

DEMANDS CONTROLLED BY GRAVITY CASE (FENCE SELF WEIGHT + PERSON HANGING)

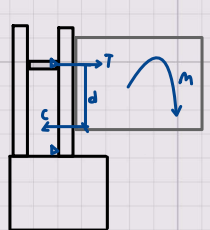

$T = C = \frac{M}{d} = \frac{4633.2\ lb\text{-}ft}{7.6667\ ft} = 604.33\ lb$ (ULT)

M @ HSS BASEPLATE : $(604.33\ lb)(80/12\ ft) = 4028.86\ lb\text{-}ft$ (ULT) — 48346.4 lb-in

M @ GATE POST BASEPLATE : $(604.33\ lb)(12/12\ ft) = 604.33\ lb\text{-}ft$ (ULT) — 7251.96 lb-in

Company:		Page:	1
Address:		Specifier:	
Phone I Fax:	|	E-Mail:	
Design:	HSS BASEPLATE ANCHORAGE	Date:	5/21/2026
Fastening point:			

Specifier's comments:

1 Input data



Anchor type and diameter:	**Hex Head ASTM F 1554 GR. 36 5/8**
Item number:	not available
Specification text:	∅ 5/8 IN HEX HEAD ASTM F 1554 GR. 36 WITH 8 IN NOMINAL EMBEDMENT DEPTH PER TECHNICAL DATA , CAST IN PLACE INSTALLATION PER MPII
Effective embedment depth:	h_{ef} = 8.000 in.
Material:	ASTM F 1554
Evaluation Service Report:	Hilti Technical Data
Issued I Valid:	- | -
Proof:	Design Method ACI 318-19 / CIP
Shear edge breakout verification:	Row closest to edge (Case 3 only from ACI 318-19 Fig. R.17.7.2.1b)
Stand-off installation:	e_b = 0.000 in. (no stand-off); t = 0.750 in.
Anchor plate[R] :	l_x x l_y x t = 8.000 in. x 8.000 in. x 0.750 in.; (Recommended plate thickness: not calculated)
Profile:	Square HSS (AISC), HSS4X4X.25; (L x W x T) = 4.000 in. x 4.000 in. x 0.250 in.
Base material:	cracked concrete, 3000, f_c' = 3,000 psi; h = 42.000 in.
Reinforcement:	tension: not present, shear: not present;
	edge reinforcement: none or < No. 4 bar

[R] - The anchor calculation is based on a rigid anchor plate assumption.

Geometry [in.] & Loading [lb, in.lb]

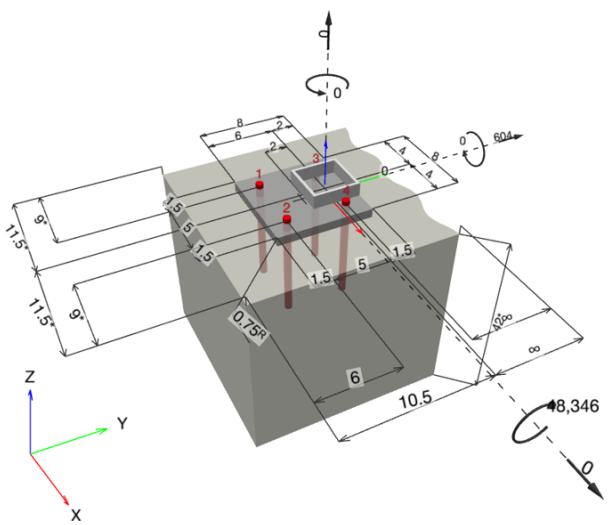

Input data and results must be checked for conformity with the existing conditions and for plausibility!
PROFIS Engineering (c) 2003-2026 Hilti AG, FL-9494 Schaan Hilti is a registered Trademark of Hilti AG, Schaan

Company:		Page:	2
Address:		Specifier:	
Phone I Fax:	|	E-Mail:	
Design:	HSS BASEPLATE ANCHORAGE	Date:	5/21/2026
Fastening point:			

1.1 Design results

Case	Description	Forces [lb] / Moments [in.lb]	Seismic	Max. Util. Anchor [%]
1	Combination 1	N = 0; V_x = 0; V_y = 604; M_x = -48,346; M_y = 0; M_z = 0;	no	64

2 Load case/Resulting anchor forces

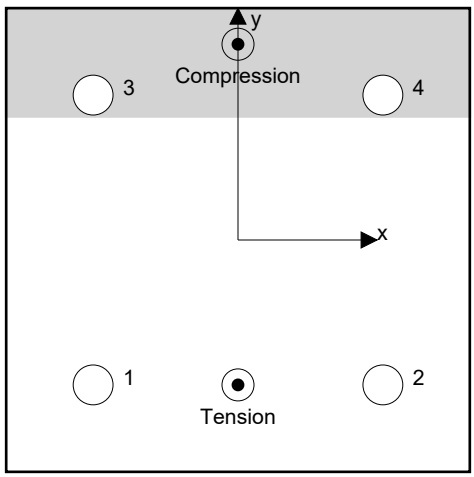

Anchor reactions [lb]
Tension force: (+Tension, -Compression)

Anchor	Tension force	Shear force	Shear force x	Shear force y
1	4,113	151	0	151
2	4,113	151	0	151
3	0	151	0	151
4	0	151	0	151

Max. concrete compressive strain:	0.25 [‰]
Max. concrete compressive stress:	1,101 [psi]
Resulting tension force in (x/y)=(-0.000/-2.500):	8,226 [lb]
Resulting compression force in (x/y)=(-0.000/3.377):	8,226 [lb]

Anchor forces are calculated based on the assumption of a rigid anchor plate.

3 Tension load

	Load N_{ua} [lb]	Capacity ϕ N_n [lb]	Utilization $\beta_N = N_{ua}/\phi$ N_n	Status
Steel Strength*	4,113	9,831	42	OK
Pullout Strength*	4,113	7,627	54	OK
Concrete Breakout Failure**	8,226	12,960	64	OK
Concrete Side-Face Blowout, direction **	N/A	N/A	N/A	N/A

* highest loaded anchor **anchor group (anchors in tension)

Input data and results must be checked for conformity with the existing conditions and for plausibility!
PROFIS Engineering (c) 2003-2026 Hilti AG, FL-9494 Schaan Hilti is a registered Trademark of Hilti AG, Schaan

Company:		Page:	3
Address:		Specifier:	
Phone I Fax:	|	E-Mail:	
Design:	HSS BASEPLATE ANCHORAGE	Date:	5/21/2026
Fastening point:			

3.1 Steel Strength

$N_{sa} = A_{se,N} f_{uta}$ ACI 318-19 Eq. (17.6.1.2)
$\phi N_{sa} \geq N_{ua}$ ACI 318-19 Table 17.5.2

Variables

$A_{se,N}$ [in.^{2}]	f_{uta} [psi]
0.23	58,000

Calculations

N_{sa} [lb]
13,108

Results

N_{sa} [lb]	ϕ_{steel}	ϕN_{sa} [lb]	N_{ua} [lb]
13,108	0.750	9,831	4,113

3.2 Pullout Strength

$N_{pN} = \psi_{c,p} N_p$ ACI 318-19 Eq. (17.6.3.1)
$N_p = 8 A_{brg} f'_c$ ACI 318-19 Eq. (17.6.3.2.2a)
$\phi N_{pN} \geq N_{ua}$ ACI 318-19 Table 17.5.2

Variables

$\psi_{c,p}$	A_{brg} [in.^{2}]	λ_a	f'_c [psi]
1.000	0.45	1.000	3,000

Calculations

N_p [lb]
10,896

Results

N_{pn} [lb]	$\phi_{concrete}$	ϕN_{pn} [lb]	N_{ua} [lb]
10,896	0.700	7,627	4,113

Input data and results must be checked for conformity with the existing conditions and for plausibility!
PROFIS Engineering (c) 2003-2026 Hilti AG, FL-9494 Schaan Hilti is a registered Trademark of Hilti AG, Schaan

Company:		Page:	4
Address:		Specifier:	
Phone I Fax:	|	E-Mail:	
Design:	HSS BASEPLATE ANCHORAGE	Date:	5/21/2026
Fastening point:			

3.3 Concrete Breakout Failure

$N_{cbg} = \left(\frac{A_{Nc}}{A_{Nc0}}\right) \psi_{ec,N}\ \psi_{ed,N}\ \psi_{c,N}\ \psi_{cp,N}\ N_b$ — ACI 318-19 Eq. (17.6.2.1b)

$\phi\ N_{cbg} \geq N_{ua}$ — ACI 318-19 Table 17.5.2

A_{Nc} see ACI 318-19, Section 17.6.2.1, Fig. R 17.6.2.1(b)

$A_{Nc0} = 9\ h_{ef}^2$ — ACI 318-19 Eq. (17.6.2.1.4)

$\psi_{ec,N} = \left(\frac{1}{1 + \frac{2\ e'_N}{3\ h_{ef}}}\right) \leq 1.0$ — ACI 318-19 Eq. (17.6.2.3.1)

$\psi_{ed,N} = 0.7 + 0.3\left(\frac{c_{a,min}}{1.5h_{ef}}\right) \leq 1.0$ — ACI 318-19 Eq. (17.6.2.4.1b)

$\psi_{cp,N} = \text{MAX}\left(\frac{c_{a,min}}{c_{ac}}, \frac{1.5h_{ef}}{c_{ac}}\right) \leq 1.0$ — ACI 318-19 Eq. (17.6.2.6.1b)

$N_b = k_c\ \lambda_a\ \sqrt{f'_c}\ h_{ef}^{1.5}$ — ACI 318-19 Eq. (17.6.2.2.1)

Variables

h_{ef} [in.]	$e_{c1,N}$ [in.]	$e_{c2,N}$ [in.]	$c_{a,min}$ [in.]	$\psi_{c,N}$
6.000	0.000	0.000	6.000	1.000

c_{ac} [in.]	k_c	λ_a	f'_c [psi]
-	24	1.000	3,000

Calculations

A_{Nc} [in.^{2}]	A_{Nc0} [in.^{2}]	$\psi_{ec1,N}$	$\psi_{ec2,N}$	$\psi_{ed,N}$	$\psi_{cp,N}$	N_b [lb]
345.00	324.00	1.000	1.000	0.900	1.000	19,320

Results

N_{cbg} [lb]	$\phi_{concrete}$	$\phi\ N_{cbg}$ [lb]	N_{ua} [lb]
18,515	0.700	12,960	8,226

Input data and results must be checked for conformity with the existing conditions and for plausibility!
PROFIS Engineering (c) 2003-2026 Hilti AG, FL-9494 Schaan Hilti is a registered Trademark of Hilti AG, Schaan

Company:		Page:	5
Address:		Specifier:	
Phone I Fax:	|	E-Mail:	
Design:	HSS BASEPLATE ANCHORAGE	Date:	5/21/2026
Fastening point:			

4 Shear load

	Load V_{ua} [lb]	Capacity ϕ V_n [lb]	Utilization $\beta_V = V_{ua}/\phi$ V_n	Status
Steel Strength*	151	5,112	3	OK
Steel failure (with lever arm)*	N/A	N/A	N/A	N/A
Pryout Strength**	604	34,561	2	OK
Concrete edge failure in direction x-**	604	15,758	4	OK

* highest loaded anchor **anchor group (relevant anchors)
When the input edge distance is set to "infinity", edge breakout verification is not performed in that direction

4.1 Steel Strength

$V_{sa} = 0.6\ A_{se,V}\ f_{uta}$ ACI 318-19 Eq. (17.7.1.2b)
$\phi\ V_{steel} \geq V_{ua}$ ACI 318-19 Table 17.5.2

Variables

$A_{se,V}$ [in.^{2}]	f_{uta} [psi]
0.23	58,000

Calculations

V_{sa} [lb]
7,865

Results

V_{sa} [lb]	ϕ steel	ϕ V_{sa} [lb]	V_{ua} [lb]
7,865	0.650	5,112	151

Input data and results must be checked for conformity with the existing conditions and for plausibility!
PROFIS Engineering (c) 2003-2026 Hilti AG, FL-9494 Schaan Hilti is a registered Trademark of Hilti AG, Schaan

Company:		Page:	6
Address:		Specifier:	
Phone I Fax:	|	E-Mail:	
Design:	HSS BASEPLATE ANCHORAGE	Date:	5/21/2026
Fastening point:			

4.2 Pryout Strength

$V_{cpg} = k_{cp} \left[\left(\frac{A_{Nc}}{A_{Nc0}} \right) \psi_{ec,N} \psi_{ed,N} \psi_{c,N} \psi_{cp,N} N_b \right]$ ACI 318-19 Eq. (17.7.3.1b)

$\phi V_{cpg} \geq V_{ua}$ ACI 318-19 Table 17.5.2

A_{Nc} see ACI 318-19, Section 17.6.2.1, Fig. R 17.6.2.1(b)

$A_{Nc0} = 9 h_{ef}^2$ ACI 318-19 Eq. (17.6.2.1.4)

$\psi_{ec,N} = \left(\frac{1}{1 + \frac{2 e'_N}{3 h_{ef}}} \right) \leq 1.0$ ACI 318-19 Eq. (17.6.2.3.1)

$\psi_{ed,N} = 0.7 + 0.3 \left(\frac{c_{a,min}}{1.5 h_{ef}} \right) \leq 1.0$ ACI 318-19 Eq. (17.6.2.4.1b)

$\psi_{cp,N} = \text{MAX}\left(\frac{c_{a,min}}{c_{ac}}, \frac{1.5 h_{ef}}{c_{ac}} \right) \leq 1.0$ ACI 318-19 Eq. (17.6.2.6.1b)

$N_b = k_c \lambda_a \sqrt{f'_c} h_{ef}^{1.5}$ ACI 318-19 Eq. (17.6.2.2.1)

Variables

k_{cp}	h_{ef} [in.]	$e_{c1,N}$ [in.]	$e_{c2,N}$ [in.]	$c_{a,min}$ [in.]
2	6.000	0.000	0.000	6.000

$\psi_{c,N}$	c_{ac} [in.]	k_c	λ_a	f'_c [psi]
1.000	-	24	1.000	3,000

Calculations

A_{Nc} [in.^{2}]	A_{Nc0} [in.^{2}]	$\psi_{ec1,N}$	$\psi_{ec2,N}$	$\psi_{ed,N}$	$\psi_{cp,N}$	N_b [lb]
460.00	324.00	1.000	1.000	0.900	1.000	19,320

Results

V_{cpg} [lb]	$\phi_{concrete}$	ϕV_{cpg} [lb]	V_{ua} [lb]
49,372	0.700	34,561	604

Input data and results must be checked for conformity with the existing conditions and for plausibility!
PROFIS Engineering (c) 2003-2026 Hilti AG, FL-9494 Schaan Hilti is a registered Trademark of Hilti AG, Schaan

4.3 Concrete edge failure in direction x-

$V_{cbg} = \left(\frac{A_{Vc}}{A_{Vc0}}\right) \psi_{ec,V} \psi_{ed,V} \psi_{c,V} \psi_{h,V} \psi_{parallel,V} V_b$ ACI 318-19 Eq. (17.7.2.1b)

$\phi V_{cbg} \geq V_{ua}$ ACI 318-19 Table 17.5.2

A_{Vc} see ACI 318-19, Section 17.7.2.1, Fig. R 17.7.2.1(b)*

$A_{Vc0} = 4.5 c_{a1}^2$ ACI 318-19 Eq. (17.7.2.1.3)

$\psi_{ec,V} = \left(\frac{1}{1 + \frac{e'_v}{1.5c_{a1}}}\right) \leq 1.0$ ACI 318-19 Eq. (17.7.2.3.1)

$\psi_{ed,V} = 0.7 + 0.3\left(\frac{c_{a2}}{1.5c_{a1}}\right) \leq 1.0$ ACI 318-19 Eq. (17.7.2.4.1b)

$\psi_{h,V} = \sqrt{\frac{1.5c_{a1}}{h_a}} \geq 1.0$ ACI 318-19 Eq. (17.7.2.6.1)

$V_b = \left(7 \left(\frac{l_e}{d_a}\right)^{0.2} \sqrt{d_a}\right) \lambda_a \sqrt{f'_c} c_{a1}^{1.5}$ ACI 318-19 Eq. (17.7.2.2.1a)

Variables

c_{a1} [in.]	c_{a2} [in.]	e_{cV} [in.]	$\psi_{c,V}$	h_a [in.]
9.000	6.000	0.000	1.000	42.000

l_e [in.]	λ_a	d_a [in.]	f'_c [psi]	$\psi_{parallel,V}$
5.000	1.000	0.625	3,000	2.000

Calculations

A_{Vc} [in.^{2}]	A_{Vc0} [in.^{2}]	$\psi_{ec,V}$	$\psi_{ed,V}$	$\psi_{h,V}$	V_b [lb]
330.75	364.50	1.000	1.000	1.000	12,405

Results

V_{cbg} [lb]	$\phi_{concrete}$	ϕV_{cbg} [lb]	V_{ua} [lb]
22,512	0.700	15,758	604

*Anchor row defined by: Anchor 1, 3; Case 3 controls

When the input edge distance is set to "infinity", edge breakout verification is not performed in that direction

5 Combined tension and shear loads, per ACI 318-19 section 17.8

β_N	β_V	ζ	Utilization $\beta_{N,V}$ [%]	Status
0.635	0.038	5/3	48	OK

$\beta_{NV} = \beta_N^{\zeta} + \beta_V^{\zeta} <= 1$

PROFIS Engineering (c) 2003-2026 Hilti AG, FL-9494 Schaan Hilti is a registered Trademark of Hilti AG, Schaan

Company:		Page:	8
Address:		Specifier:	
Phone I Fax:	|	E-Mail:	
Design:	HSS BASEPLATE ANCHORAGE	Date:	5/21/2026
Fastening point:			

6 Warnings

- The anchor design methods in PROFIS Engineering require rigid anchor plates per current regulations (EN1992-4, AS5216, etc.). This means load re-distribution on the anchors due to elastic deformations of the anchor plate are not considered - the anchor plate is assumed to be sufficiently stiff, in order not to be deformed when subjected to the design loading. PROFIS Engineering calculates the minimum required anchor plate thickness with FEM to limit the stress of the anchor plate based on the assumptions explained above. The proof if the rigid anchor plate assumption is valid is not carried out by PROFIS Engineering. Input data and results must be checked for agreement with the existing conditions and for plausibility!
- The equations presented in this report are based on imperial units. When inputs are displayed in metric units, the user should be aware that the equations remain in their imperial format.
- Condition A applies where the potential concrete failure surfaces are crossed by supplementary reinforcement proportioned to tie the potential concrete failure prism into the structural member. Condition B applies where such supplementary reinforcement is not provided, or where pullout or pryout strength governs.
- For additional information about ACI 318 strength design provisions, please go to https://viewer.joomag.com/profis-design-guide-us-en-summer-2021/0841849001625154758?short&/

Fastening meets the design criteria!

PROFIS Engineering (c) 2003-2026 Hilti AG, FL-9494 Schaan Hilti is a registered Trademark of Hilti AG, Schaan

Company:		Page:	9
Address:		Specifier:	
Phone I Fax:	|	E-Mail:	
Design:	HSS BASEPLATE ANCHORAGE	Date:	5/21/2026
Fastening point:			

7 Installation data

Profile: Square HSS (AISC), HSS4X4X.25; (L x W x T) = 4.000 in. x 4.000 in. x 0.250 in.

Hole diameter in the fixture: d_f = 0.687 in.

Plate thickness (input): 0.750 in.

Recommended plate thickness: not calculated

Anchor type and diameter: Hex Head ASTM F 1554 GR. 36 5/8

Item number: not available

Maximum installation torque: -

Hole diameter in the base material: - in.

Hole depth in the base material: 8.000 in.

Minimum thickness of the base material: 8.922 in.

∅ 5/8 in Hex Head ASTM F 1554 GR. 36 with 8 in nominal embedment depth per Technical data , cast in place installation per MPII

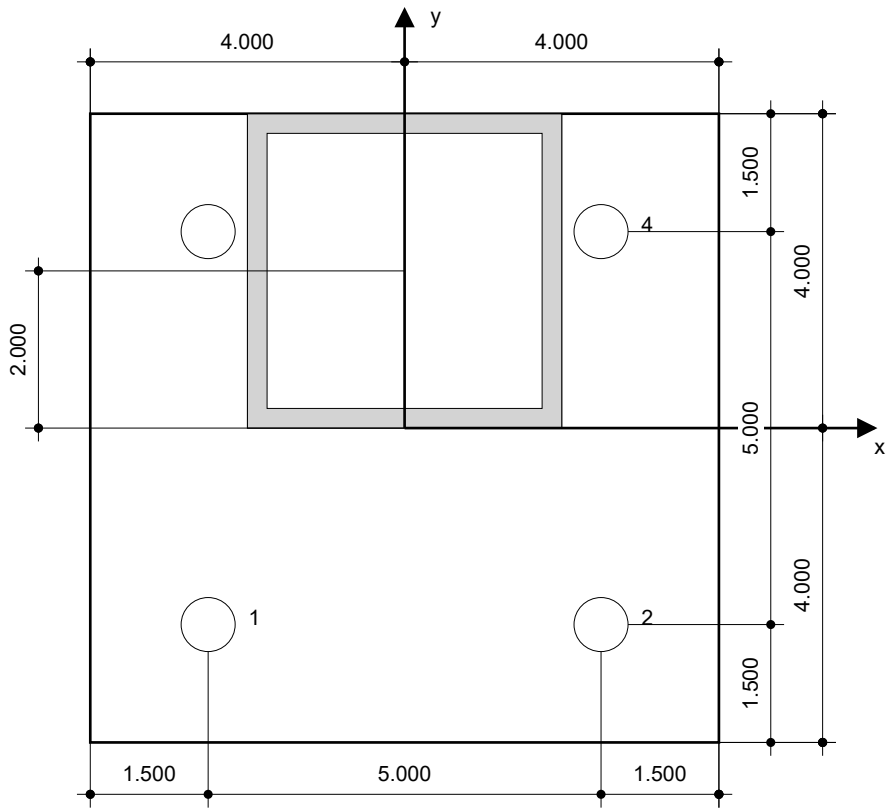

Coordinates Anchor [in.]

Anchor	x	y	c_{-x}	c_{+x}	c_{-y}	c_{+y}
1	-2.500	-2.500	9.000	14.000	6.000	-
2	2.500	-2.500	14.000	9.000	6.000	-
3	-2.500	2.500	9.000	14.000	11.000	-
4	2.500	2.500	14.000	9.000	11.000	-

Input data and results must be checked for conformity with the existing conditions and for plausibility!
PROFIS Engineering (c) 2003-2026 Hilti AG, FL-9494 Schaan Hilti is a registered Trademark of Hilti AG, Schaan

8 Remarks; Your Cooperation Duties

- Any and all information and data contained in the Software concern solely the use of Hilti products and are based on the principles, formulas and security regulations in accordance with Hilti's technical directions and operating, mounting and assembly instructions, etc., that must be strictly complied with by the user. All figures contained therein are average figures, and therefore use-specific tests are to be conducted prior to using the relevant Hilti product. The results of the calculations carried out by means of the Software are based essentially on the data you put in. Therefore, you bear the sole responsibility for the absence of errors, the completeness and the relevance of the data to be put in by you. Moreover, you bear sole responsibility for having the results of the calculation checked and cleared by an expert, particularly with regard to compliance with applicable norms and permits, prior to using them for your specific facility. The Software serves only as an aid to interpret norms and permits without any guarantee as to the absence of errors, the correctness and the relevance of the results or suitability for a specific application.
- You must take all necessary and reasonable steps to prevent or limit damage caused by the Software. In particular, you must arrange for the regular backup of programs and data and, if applicable, carry out the updates of the Software offered by Hilti on a regular basis. If you do not use the AutoUpdate function of the Software, you must ensure that you are using the current and thus up-to-date version of the Software in each case by carrying out manual updates via the Hilti Website. Hilti will not be liable for consequences, such as the recovery of lost or damaged data or programs, arising from a culpable breach of duty by you.

Input data and results must be checked for conformity with the existing conditions and for plausibility!
PROFIS Engineering (c) 2003-2026 Hilti AG, FL-9494 Schaan Hilti is a registered Trademark of Hilti AG, Schaan

Company:		Page:	1
Address:		Specifier:	
Phone I Fax:	|	E-Mail:	
Design:	BIGGER BASEPLATE ANCHORAGE	Date:	5/21/2026
Fastening point:			

Specifier's comments:

1 Input data



Anchor type and diameter:	**Hex Head ASTM F 1554 GR. 36 1**
Item number:	not available
Specification text:	∅ 1 IN HEX HEAD ASTM F 1554 GR. 36 WITH 8 IN NOMINAL EMBEDMENT DEPTH PER TECHNICAL DATA , CAST IN PLACE INSTALLATION PER MPII
Effective embedment depth:	h_{ef} = 8.000 in.
Material:	ASTM F 1554
Evaluation Service Report:	Hilti Technical Data
Issued I Valid:	- | -
Proof:	Design Method ACI 318-19 / CIP
Shear edge breakout verification:	Row closest to edge (Case 3 only from ACI 318-19 Fig. R.17.7.2.1b)
Stand-off installation:	e_b = 0.000 in. (no stand-off); t = 0.500 in.
Anchor plate[R] :	l_x x l_y x t = 12.000 in. x 12.000 in. x 0.500 in.; (Recommended plate thickness: not calculated)
Profile:	Square HSS (AISC), HSS4X4X.25; (L x W x T) = 4.000 in. x 4.000 in. x 0.250 in.
Base material:	cracked concrete, 3000, f_c' = 3,000 psi; h = 42.000 in.
Reinforcement:	tension: not present, shear: not present;
	edge reinforcement: none or < No. 4 bar

[R] - The anchor calculation is based on a rigid anchor plate assumption.

Geometry [in.] & Loading [lb, in.lb]

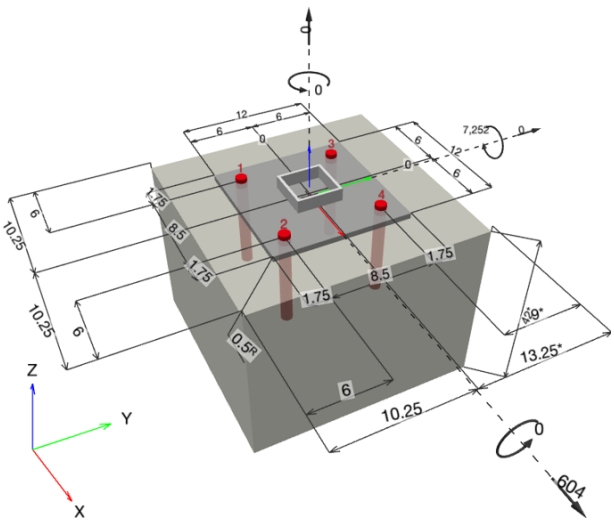
Z
Y
X
12
6
6
6
10.25
1.75
8.5
1.75
1.75
8.5
1.75
10.25
6
0.5
6
10.25
13.25
7.25
6
6
6

Company:		Page:	2
Address:		Specifier:	
Phone I Fax:	|	E-Mail:	
Design:	BIGGER BASEPLATE ANCHORAGE	Date:	5/21/2026
Fastening point:			

1.1 Design results

Case	Description	Forces [lb] / Moments [in.lb]	Seismic	Max. Util. Anchor [%]
1	Combination 1	N = 0; V_x = 604; V_y = 0; M_x = 0; M_y = 7,252; M_z = 0;	no	11

2 Load case/Resulting anchor forces

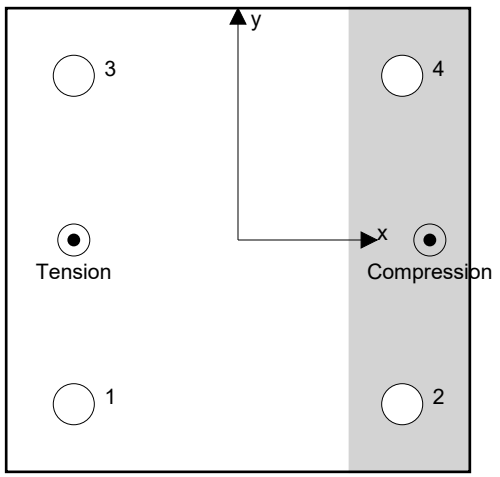

Anchor reactions [lb]

Tension force: (+Tension, -Compression)

Anchor	Tension force	Shear force	Shear force x	Shear force y
1	393	151	151	0
2	0	151	151	0
3	393	151	151	0
4	0	151	151	0

Max. concrete compressive strain:	0.01 [‰]
Max. concrete compressive stress:	42 [psi]
Resulting tension force in (x/y)=(-4.250/0.000):	787 [lb]
Resulting compression force in (x/y)=(4.966/0.000):	787 [lb]

Anchor forces are calculated based on the assumption of a rigid anchor plate.

3 Tension load

	Load N_{ua} [lb]	Capacity ϕ N_n [lb]	Utilization $\beta_N = N_{ua}/\phi$ N_n	Status
Steel Strength*	393	26,361	2	OK
Pullout Strength*	393	19,538	3	OK
Concrete Breakout Failure**	787	13,242	6	OK
Concrete Side-Face Blowout, direction **	N/A	N/A	N/A	N/A

* highest loaded anchor **anchor group (anchors in tension)

Input data and results must be checked for conformity with the existing conditions and for plausibility!
PROFIS Engineering (c) 2003-2026 Hilti AG, FL-9494 Schaan Hilti is a registered Trademark of Hilti AG, Schaan

Company:		Page:	3
Address:		Specifier:	
Phone I Fax:	|	E-Mail:	
Design:	BIGGER BASEPLATE ANCHORAGE	Date:	5/21/2026
Fastening point:			

3.1 Steel Strength

$N_{sa} = A_{se,N} f_{uta}$ ACI 318-19 Eq. (17.6.1.2)
$\phi N_{sa} \geq N_{ua}$ ACI 318-19 Table 17.5.2

Variables

$A_{se,N}$ [in.^{2}]	f_{uta} [psi]
0.61	58,000

Calculations

N_{sa} [lb]
35,148

Results

N_{sa} [lb]	ϕ_{steel}	ϕN_{sa} [lb]	N_{ua} [lb]
35,148	0.750	26,361	393

3.2 Pullout Strength

$N_{pN} = \psi_{c,p} N_p$ ACI 318-19 Eq. (17.6.3.1)
$N_p = 8 A_{brg} f'_c$ ACI 318-19 Eq. (17.6.3.2.2a)
$\phi N_{pN} \geq N_{ua}$ ACI 318-19 Table 17.5.2

Variables

$\psi_{c,p}$	A_{brg} [in.^{2}]	λ_a	f'_c [psi]
1.000	1.16	1.000	3,000

Calculations

N_p [lb]
27,912

Results

N_{pn} [lb]	$\phi_{concrete}$	ϕN_{pn} [lb]	N_{ua} [lb]
27,912	0.700	19,538	393

Input data and results must be checked for conformity with the existing conditions and for plausibility!
PROFIS Engineering (c) 2003-2026 Hilti AG, FL-9494 Schaan Hilti is a registered Trademark of Hilti AG, Schaan

Company:		Page:	4
Address:		Specifier:	
Phone I Fax:	|	E-Mail:	
Design:	BIGGER BASEPLATE ANCHORAGE	Date:	5/21/2026
Fastening point:			

3.3 Concrete Breakout Failure

$N_{cbg} = \left(\frac{A_{Nc}}{A_{Nc0}}\right) \psi_{ec,N}\ \psi_{ed,N}\ \psi_{c,N}\ \psi_{cp,N}\ N_b$ — ACI 318-19 Eq. (17.6.2.1b)

$\phi\ N_{cbg} \geq N_{ua}$ — ACI 318-19 Table 17.5.2

A_{Nc} see ACI 318-19, Section 17.6.2.1, Fig. R 17.6.2.1(b)

$A_{Nc0} = 9\ h_{ef}^2$ — ACI 318-19 Eq. (17.6.2.1.4)

$\psi_{ec,N} = \left(\frac{1}{1 + \frac{2\ e'_N}{3\ h_{ef}}}\right) \leq 1.0$ — ACI 318-19 Eq. (17.6.2.3.1)

$\psi_{ed,N} = 0.7 + 0.3\left(\frac{c_{a,min}}{1.5h_{ef}}\right) \leq 1.0$ — ACI 318-19 Eq. (17.6.2.4.1b)

$\psi_{cp,N} = \text{MAX}\left(\frac{c_{a,min}}{c_{ac}}, \frac{1.5h_{ef}}{c_{ac}}\right) \leq 1.0$ — ACI 318-19 Eq. (17.6.2.6.1b)

$N_b = k_c\ \lambda_a\ \sqrt{f'_c}\ h_{ef}^{1.5}$ — ACI 318-19 Eq. (17.6.2.2.1)

Variables

h_{ef} [in.]	$e_{c1,N}$ [in.]	$e_{c2,N}$ [in.]	$c_{a,min}$ [in.]	$\psi_{c,N}$
6.000	0.000	0.000	6.000	1.000

c_{ac} [in.]	k_c	λ_a	f'_c [psi]
-	24	1.000	3,000

Calculations

A_{Nc} [in.^{2}]	A_{Nc0} [in.^{2}]	$\psi_{ec1,N}$	$\psi_{ec2,N}$	$\psi_{ed,N}$	$\psi_{cp,N}$	N_b [lb]
352.50	324.00	1.000	1.000	0.900	1.000	19,320

Results

N_{cbg} [lb]	$\phi_{concrete}$	$\phi\ N_{cbg}$ [lb]	N_{ua} [lb]
18,917	0.700	13,242	787

Input data and results must be checked for conformity with the existing conditions and for plausibility!
PROFIS Engineering (c) 2003-2026 Hilti AG, FL-9494 Schaan Hilti is a registered Trademark of Hilti AG, Schaan

Company:		Page:	5
Address:		Specifier:	
Phone I Fax:	|	E-Mail:	
Design:	BIGGER BASEPLATE ANCHORAGE	Date:	5/21/2026
Fastening point:			

4 Shear load

	Load V_{ua} [lb]	Capacity ϕ V_n [lb]	Utilization $\beta_V = V_{ua}/\phi$ V_n	Status
Steel Strength*	151	13,708	2	OK
Steel failure (with lever arm)*	N/A	N/A	N/A	N/A
Pryout Strength**	604	36,195	2	OK
Concrete edge failure in direction x+**	604	5,959	11	OK

* highest loaded anchor **anchor group (relevant anchors)

4.1 Steel Strength

$V_{sa} = 0.6\ A_{se,V}\ f_{uta}$ ACI 318-19 Eq. (17.7.1.2b)
$\phi\ V_{steel} \geq V_{ua}$ ACI 318-19 Table 17.5.2

Variables

$A_{se,V}$ [in.^{2}]	f_{uta} [psi]
0.61	58,000

Calculations

V_{sa} [lb]
21,089

Results

V_{sa} [lb]	ϕ_{steel}	ϕ V_{sa} [lb]	V_{ua} [lb]
21,089	0.650	13,708	151

Input data and results must be checked for conformity with the existing conditions and for plausibility!
PROFIS Engineering (c) 2003-2026 Hilti AG, FL-9494 Schaan Hilti is a registered Trademark of Hilti AG, Schaan

Company:		Page:	6
Address:		Specifier:	
Phone I Fax:	|	E-Mail:	
Design:	BIGGER BASEPLATE ANCHORAGE	Date:	5/21/2026
Fastening point:			

4.2 Pryout Strength

$V_{cpg} = k_{cp} \left[\left(\frac{A_{Nc}}{A_{Nc0}} \right) \psi_{ec,N} \psi_{ed,N} \psi_{c,N} \psi_{cp,N} N_b \right]$ ACI 318-19 Eq. (17.7.3.1b)

$\phi V_{cpg} \geq V_{ua}$ ACI 318-19 Table 17.5.2

A_{Nc} see ACI 318-19, Section 17.6.2.1, Fig. R 17.6.2.1(b)

$A_{Nc0} = 9 h_{ef}^2$ ACI 318-19 Eq. (17.6.2.1.4)

$\psi_{ec,N} = \left(\frac{1}{1 + \frac{2 e'_N}{3 h_{ef}}} \right) \leq 1.0$ ACI 318-19 Eq. (17.6.2.3.1)

$\psi_{ed,N} = 0.7 + 0.3 \left(\frac{c_{a,min}}{1.5 h_{ef}} \right) \leq 1.0$ ACI 318-19 Eq. (17.6.2.4.1b)

$\psi_{cp,N} = \text{MAX}\left(\frac{c_{a,min}}{c_{ac}}, \frac{1.5 h_{ef}}{c_{ac}} \right) \leq 1.0$ ACI 318-19 Eq. (17.6.2.6.1b)

$N_b = k_c \lambda_a \sqrt{f'_c} h_{ef}^{1.5}$ ACI 318-19 Eq. (17.6.2.2.1)

Variables

k_{cp}	h_{ef} [in.]	$e_{c1,N}$ [in.]	$e_{c2,N}$ [in.]	$c_{a,min}$ [in.]
2	6.000	0.000	0.000	6.000

$\psi_{c,N}$	c_{ac} [in.]	k_c	λ_a	f'_c [psi]
1.000	-	24	1.000	3,000

Calculations

A_{Nc} [in.^{2}]	A_{Nc0} [in.^{2}]	$\psi_{ec1,N}$	$\psi_{ec2,N}$	$\psi_{ed,N}$	$\psi_{cp,N}$	N_b [lb]
481.75	324.00	1.000	1.000	0.900	1.000	19,320

Results

V_{cpg} [lb]	$\phi_{concrete}$	ϕV_{cpg} [lb]	V_{ua} [lb]
51,707	0.700	36,195	604

Input data and results must be checked for conformity with the existing conditions and for plausibility!
PROFIS Engineering (c) 2003-2026 Hilti AG, FL-9494 Schaan Hilti is a registered Trademark of Hilti AG, Schaan

4.3 Concrete edge failure in direction x+

$V_{cbg} = \left(\frac{A_{Vc}}{A_{Vc0}}\right) \psi_{ec,V} \psi_{ed,V} \psi_{c,V} \psi_{h,V} \psi_{parallel,V} V_b$ ACI 318-19 Eq. (17.7.2.1b)

$\phi V_{cbg} \geq V_{ua}$ ACI 318-19 Table 17.5.2

A_{Vc} see ACI 318-19, Section 17.7.2.1, Fig. R 17.7.2.1(b)*

$A_{Vc0} = 4.5 c_{a1}^2$ ACI 318-19 Eq. (17.7.2.1.3)

$\psi_{ec,V} = \left(\frac{1}{1 + \frac{e'_v}{1.5c_{a1}}}\right) \leq 1.0$ ACI 318-19 Eq. (17.7.2.3.1)

$\psi_{ed,V} = 0.7 + 0.3\left(\frac{c_{a2}}{1.5c_{a1}}\right) \leq 1.0$ ACI 318-19 Eq. (17.7.2.4.1b)

$\psi_{h,V} = \sqrt{\frac{1.5c_{a1}}{h_a}} \geq 1.0$ ACI 318-19 Eq. (17.7.2.6.1)

$V_b = 9 \lambda_a \sqrt{f'_c} c_{a1}^{1.5}$ ACI 318-19 Eq. (17.7.2.2.1b)

Variables

c_{a1} [in.]	c_{a2} [in.]	e_{cV} [in.]	$\psi_{c,V}$	h_a [in.]
6.000	6.000	0.000	1.000	42.000

l_e [in.]	λ_a	d_a [in.]	f'_c [psi]	$\psi_{parallel,V}$
8.000	1.000	1.000	3,000	1.000

Calculations

A_{Vc} [in.^{2}]	A_{Vc0} [in.^{2}]	$\psi_{ec,V}$	$\psi_{ed,V}$	$\psi_{h,V}$	V_b [lb]
211.50	162.00	1.000	0.900	1.000	7,245

Results

V_{cbg} [lb]	$\phi_{concrete}$	ϕV_{cbg} [lb]	V_{ua} [lb]
8,513	0.700	5,959	604

*Anchor row defined by: Anchor 2, 4; Case 3 controls

5 Combined tension and shear loads, per ACI 318-19 section 17.8

β_N	β_V	ζ	Utilization $\beta_{N,V}$ [%]	Status
0.059	0.101	5/3	4	OK

$\beta_{NV} = \beta_N^{\zeta} + \beta_V^{\zeta} <= 1$

Input data and results must be checked for conformity with the existing conditions and for plausibility!
PROFIS Engineering (c) 2003-2026 Hilti AG, FL-9494 Schaan Hilti is a registered Trademark of Hilti AG, Schaan

Company:		Page:	8
Address:		Specifier:	
Phone I Fax:	|	E-Mail:	
Design:	BIGGER BASEPLATE ANCHORAGE	Date:	5/21/2026
Fastening point:			

6 Warnings

- The anchor design methods in PROFIS Engineering require rigid anchor plates per current regulations (EN1992-4, AS5216, etc.). This means load re-distribution on the anchors due to elastic deformations of the anchor plate are not considered - the anchor plate is assumed to be sufficiently stiff, in order not to be deformed when subjected to the design loading. PROFIS Engineering calculates the minimum required anchor plate thickness with FEM to limit the stress of the anchor plate based on the assumptions explained above. The proof if the rigid anchor plate assumption is valid is not carried out by PROFIS Engineering. Input data and results must be checked for agreement with the existing conditions and for plausibility!
- The equations presented in this report are based on imperial units. When inputs are displayed in metric units, the user should be aware that the equations remain in their imperial format.
- Condition A applies where the potential concrete failure surfaces are crossed by supplementary reinforcement proportioned to tie the potential concrete failure prism into the structural member. Condition B applies where such supplementary reinforcement is not provided, or where pullout or pryout strength governs.
- For additional information about ACI 318 strength design provisions, please go to https://viewer.joomag.com/profis-design-guide-us-en-summer-2021/0841849001625154758?short&/

Fastening meets the design criteria!

PROFIS Engineering (c) 2003-2026 Hilti AG, FL-9494 Schaan Hilti is a registered Trademark of Hilti AG, Schaan

Company:		Page:	9
Address:		Specifier:	
Phone I Fax:	|	E-Mail:	
Design:	BIGGER BASEPLATE ANCHORAGE	Date:	5/21/2026
Fastening point:			

7 Installation data

Profile: Square HSS (AISC), HSS4X4X.25; (L x W x T) = 4.000 in. x 4.000 in. x 0.250 in.

Hole diameter in the fixture: d_f = 1.062 in.

Plate thickness (input): 0.500 in.

Recommended plate thickness: not calculated

Anchor type and diameter: Hex Head ASTM F 1554 GR. 36 1

Item number: not available

Maximum installation torque: -

Hole diameter in the base material: - in.

Hole depth in the base material: 8.000 in.

Minimum thickness of the base material: 9.172 in.

∅ 1 in Hex Head ASTM F 1554 GR. 36 with 8 in nominal embedment depth per Technical data , cast in place installation per MPII

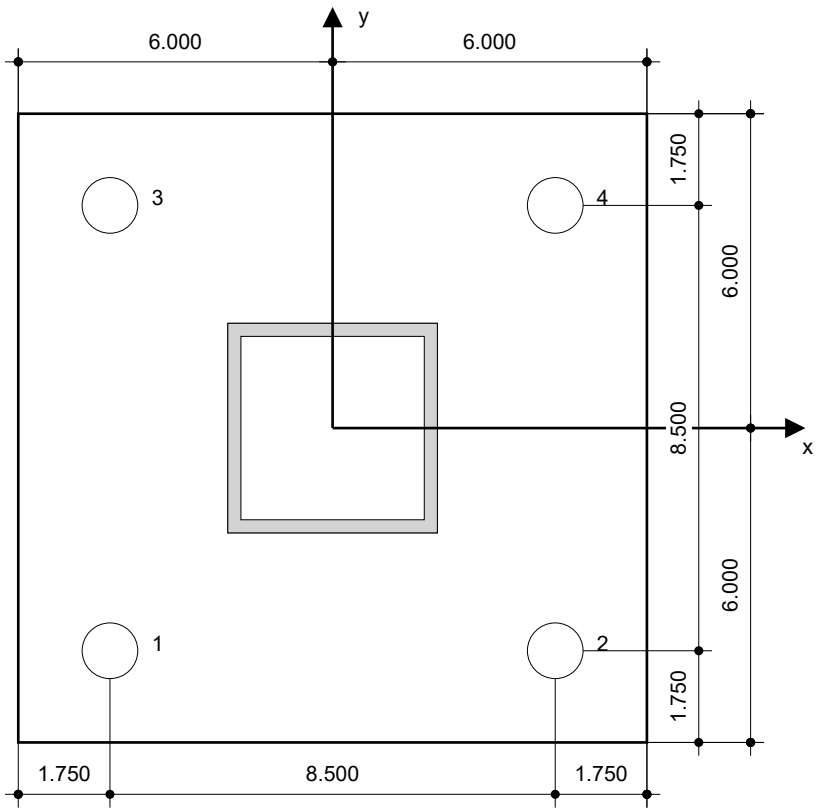

Coordinates Anchor [in.]

Anchor	x	y	c_{-x}	c_{+x}	c_{-y}	c_{+y}
1	-4.250	-4.250	6.000	14.500	6.000	17.500
2	4.250	-4.250	14.500	6.000	6.000	17.500
3	-4.250	4.250	6.000	14.500	14.500	9.000
4	4.250	4.250	14.500	6.000	14.500	9.000

Input data and results must be checked for conformity with the existing conditions and for plausibility!
PROFIS Engineering (c) 2003-2026 Hilti AG, FL-9494 Schaan Hilti is a registered Trademark of Hilti AG, Schaan

8 Remarks; Your Cooperation Duties

- Any and all information and data contained in the Software concern solely the use of Hilti products and are based on the principles, formulas and security regulations in accordance with Hilti's technical directions and operating, mounting and assembly instructions, etc., that must be strictly complied with by the user. All figures contained therein are average figures, and therefore use-specific tests are to be conducted prior to using the relevant Hilti product. The results of the calculations carried out by means of the Software are based essentially on the data you put in. Therefore, you bear the sole responsibility for the absence of errors, the completeness and the relevance of the data to be put in by you. Moreover, you bear sole responsibility for having the results of the calculation checked and cleared by an expert, particularly with regard to compliance with applicable norms and permits, prior to using them for your specific facility. The Software serves only as an aid to interpret norms and permits without any guarantee as to the absence of errors, the correctness and the relevance of the results or suitability for a specific application.
- You must take all necessary and reasonable steps to prevent or limit damage caused by the Software. In particular, you must arrange for the regular backup of programs and data and, if applicable, carry out the updates of the Software offered by Hilti on a regular basis. If you do not use the AutoUpdate function of the Software, you must ensure that you are using the current and thus up-to-date version of the Software in each case by carrying out manual updates via the Hilti Website. Hilti will not be liable for consequences, such as the recovery of lost or damaged data or programs, arising from a culpable breach of duty by you.

Input data and results must be checked for conformity with the existing conditions and for plausibility!
PROFIS Engineering (c) 2003-2026 Hilti AG, FL-9494 Schaan Hilti is a registered Trademark of Hilti AG, Schaan

DESIGN CONC FTG TO SUPPORT FENCE POST

USE IBC DESIGN FORMULAS FOR POLE FOUNDATIONS (EQ 18-2) TO DETERMINE EMBEDMENT. SINCE THE DIAMETER FOR THE FOUNDATION IS WIDE BASED ON THE REQUIRED DIMENSION FOR BOTH POST, THE SELF WEIGHT OF THE FTG WILL PROVIDE A RESISTING MOMENT ½ WILL BE SUBTRACTED FROM

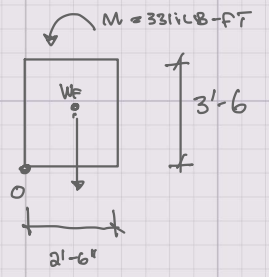

$$W_{FTG} = \frac{\pi (2.5FT)^2}{4} (3.5') (150 LB/FT^3) = 2517 LB$$

$$M_R = (2517 LB)(1.25') = 3146 LB-FT$$

$$M = M_O - M_R = 3311 LB-FT - 3146 LB-FT = 167 LB-FT$$

$$P = \frac{167 LB-F}{6.67'} = 25 LB$$

USING SPREADSHEET,

EMBED REQUIRED = 1.8' < EMBED PROVIDED = 3.5FT (OK)

PROJECT NAME: NIM Gate Post
CLIENT: OAI

DESIGNED BY: SL
DATE: 05/21/26

POST EMBEDMENT FOR OVERTURNING

(ANALYSIS PER 2012 IBC 1807.3)

d = Assumed Embedment
P = Top of Col. Lat. Load
h = Height of Column
b = Diameter of Embedment

Soil Type = Value Per IBC Table 1806.2
S1 = (Soils Type) x (h/3) x (4/3)
S3 = (Soils Type) x (h) x (4/3)
A = (2.34 x P) / (b x S1)

Unconstrained Case ====>

$$d = 0.5A\left[1 + \left(1 + \frac{4.36h}{A}\right)^{1/2}\right]$$

IBC Equation 18-1

Constrained Case ======>

$$d = \sqrt{\frac{4.25Ph}{S_3 b}}$$

IBC Equation 18-2

d (ft)	P (#)	h (ft)	b (ft)	IBC SOILS TBL 1806.2* (#/FT^2/FT) Note 1	S1 or S3 (#/FT^2) Note 2	A	d Calc'd (ft)	SOIL TYPE	CONC. REQ'D (cu. Yd.)
Unconstrained Case									
1.85	25	6.67	2.50	100	61.67	0.379	1.86	A	0.32
				100	0.00	#DIV/0!	#DIV/0!	A	0.00
				100	0.00	#DIV/0!	#DIV/0!	A	0.00
				100	0.00	#DIV/0!	#DIV/0!	A	0.00
				100	0.00	#DIV/0!	#DIV/0!	A	0.00
				100	0.00	#DIV/0!	#DIV/0!	A	0.00
				100	0.00	#DIV/0!	#DIV/0!	A	0.00
				100	0.00	#DIV/0!	#DIV/0!	A	0.00
				100	0.00	#DIV/0!	#DIV/0!	A	0.00
				100	0.00	#DIV/0!	#DIV/0!	A	0.00
				100	0.00	#DIV/0!	#DIV/0!	A	0.00
				100	0.00	#DIV/0!	#DIV/0!	A	0.00
				100	0.00	#DIV/0!	#DIV/0!	A	0.00
				100	0.00	#DIV/0!	#DIV/0!	A	0.00
				100	0.00	#DIV/0!	#DIV/0!	A	0.00
				100	0.00	#DIV/0!	#DIV/0!	A	0.00
				100	0.00	#DIV/0!	#DIV/0!	A	0.00
				100	0.00	#DIV/0!	#DIV/0!	A	0.00
				100	0.00	#DIV/0!	#DIV/0!	A	0.00
				100	0.00	#DIV/0!	#DIV/0!	A	0.00
				100	0.00	#DIV/0!	#DIV/0!	A	0.00
				100	0.00	#DIV/0!	#DIV/0!	A	0.00
				100	0.00	#DIV/0!	#DIV/0!	A	0.00
				100	0.00	#DIV/0!	#DIV/0!	A	0.00
				100	0.00	#DIV/0!	#DIV/0!	A	0.00
				100	0.00	#DIV/0!	#DIV/0!	A	0.00
Constrained Case									
-	-	-	-	-				-	

* IBC TABLE 1806.2 LATERAL SOIL BEARING VALUES (SOIL TYPE)

Notes:

1. Lateral bearing pressures are increased for each foot of depth up to 15 times the tabular value (IBC Sect. 1806.3.3)
2. Poles for buildings not adversely affected by a 1/2" motion at the ground surface due to short-term lateral loads are permitted to be designed using lateral bearing pressures equal to 2 times the tabular values (IBC Sect. 1806.3.4)

TYPE	EFP	DESCRIPTION (PER IBC)
A	100 (#/FT2/FT) ==>	Clay, Sandy Clay, Silty Clay, and Clayey Silt (CL,ML, MH, AND CH)
B	150 (#/FT2/FT) ==>	Sand, Silty Sand, Clayey Sand, Silty Gravel and Clayey Gravel (SW, SP, SM, SC, GM, and GC)
C	200 (#/FT2/FT) ==>	Sandy Gravel, and/or Gravel (GW and GP)

SUMMARY:	DIAMETER	EMBEDMENT
TYPE A SOILS:	1'-0"	5'-6"
	1'-0"x2	4'-3"
TYPE B SOILS:	1'-0"	4'-9"
	1'-0"x2	3'-9"
TYPE C SOILS:	1'-0"	4'-3"
	1'-0"x2	3'-4"

(SOILS ENGINEER TO DIRECT ACCORDING TO SITE CONDITIONS.)