BINDING EDGE

ABBREVIATIONS

a	CIRCUIT BREAKER AUX. CONTACT, CLOSED WHEN BREAKER IS CLOSED
A	AMMETER, AMPERES
AC	ALTERNATING CURRENT
A/D	ANALOG TO DIGITAL
ADJ	ADJUSTABLE
AF	AMPERE FRAME
AFD	ADJUSTABLE FREQUENCY DRIVE
AIC	AMPERES INTERRUPTING CAPACITY
AMP	AMPERES
ANN	ANNUNICATOR
API	
AS	AMMETER SWITCH
AT	AMPERE TRIP
ATS	AUTOMATIC TRANSFER SWITCH
AUTO	AUTOMATIC
AWG	AMERICAN WIRE GAGE
b	CIRCUIT BREAKER AUX. CONTACT, CLOSED WHEN BREAKER IS OPEN
BCG	BARE COPPER GROUND
C	CONDUIT
CAB	CABINET
CAP	CAPACITOR
CB	CIRCUIT BREAKER
CC	CONTROL CABLE, CLOSING COIL
CHH	COMMUNICATION HANDHOLE
CC	CLARIFIER CONSOLE
CKT	CIRCUIT
CMH	COMMUNICATION MANHOLE
CO	CONDUIT ONLY
COMM	COMMUNICATION
COND	CONDUCTOR
CPT	CONTROL POWER TRANSFORMER
CP	CONTROL PANEL
CR	CONTROL RELAY
CS	CONTROL STATION
CT	CURRENT TRANSFORMER
DB	DIRECT BURIAL
DC	DIRECT CURRENT
DIAG	DIAGRAM
DISC	DISCONNECT
DISTR	DISTRIBUTION
DIV	DIVISION
DP	DISTRIBUTION PANEL
DPDT	DOUBLE POLE, DOUBLE THROW
DPST	DOUBLE POLE, SINGLE THROW
(E)	EXISTING
EE	ELECTRICAL ENCLOSURE
EHH	ELECTRICAL HANDHOLE
ELEM	ELEMENTARY
EMERG	EMERGENCY
ENCL	ENCLOSURE
EFFL	EFFLUENT
EGC	EQUIPMENT GROUND CONDUCTOR
EMT	ELECTRICAL METALLIC TUBING
EQPT	EQUIPMENT
ETM	ELAPSED TIME METER
FCV	FLOW CONTROL VALVE
FDR	FEEDER
FE	FLOW ELEMENT
FIT	FLOW INDICATING TRANSMITTER
FLEX	FLEXIBLE
FLUOR	FLUORESCENT
FREQ	FREQUENCY
FSH	FLOAT SWITCH HIGH
FSO	FLOAT SWITCH OVERFLOW
FU	FUSE
(F)	FUTURE FUT,
FVNR	FULL VOLTAGE, NON REVERSING
FVR	FULL VOLTAGE, REVERSING
FWD	FORWARD
GEN	GENERATOR
GFI	GROUND FAULT INTERRUPTER
GND	GROUND
GRS	GALVANIZED RIGID STEEL
O2H2	HYDROGEN PEROXIDE
HH	HANDHOLE
HOA	HAND–OFF–AUTOMATIC
HOR	HAND–OFF–REMOTE
HPS	HIGH PRESSURE SODIUM
HT	HEAT TAPE, HEAT TRACE
HTR	HEATER
HV	HIGH VOLTAGE
HZ	HERTZ (CYCLES PER SECOND)
IND LT	INDICATING LIGHT
INCAND	INCANDESCENT
INSTR	INSTRUMENT, INSTRUMENTATION
I/O	INPUT/OUTPUT
ISB	INTRINSICALLY SAFE BARRIER
ISR	INTRINSICALLY SAFE RELAY
JB	JUNCTION BOX
KA	KILOAMPERES
KCMIL	THOUSANDS OF CIRCULAR MILS
KV	KILOVOLTS
KVA	kILOVOLT AMPERES
KVAR	KILOVOLT AMPERES REACTIVE
KVARH	KILOVOLT AMPERES REACTIVE HOURS
KWH	KILOWATT HOURS
LCS	LOCAL CONTROL STATION
LSH	
LTG	LIGHTING
LTS	LIGHTS
LP	LIGHTING PANEL
LR	LINE REACTOR
(M)	MODIFIED
mA	MILLIAMPERES
MCC	MOTOR CONTROL CENTER
MCP	MOTOR CIRCUIT PROTECTION OR MAIN CONTROL PANEL
MCM	THOUSAND CIRCULAR MILS (KCMIL)
MFR	MANUFACTURER
MLO	MAIN LUGS ONLY
MON	MONITOR
MOV	MOTOR OPERATED VALVE
MS	MOTOR STARTER
MTD	MOUNTED
MTG	MOUNTING
MTS	MANUAL TRANSFER SWITCH
MV	MEDIUM VOLTAGE
(N)	NEW
NC	NORMALLY CLOSED
NECA	
NEMA	NATIONAL ELECTRICAL MANUFACTURER'S ASSOC.
NEUT	NEUTRAL
NO	NORMALLY OPEN, NUMBER
OC	ON CENTER
OCP	OZONE CONTROL PANEL
OL	OVERLOAD
OT	OVER TEMPERATURE
OVLD	THERMAL OVERLOAD RELAY
OIT	OPERATOR INTERFACE TERMINAL
P	POLE, PUMP
PB	PULLBOX
PBSW	PUSHBUTTON SWITCH
PC	PHOTO CELL
PEC	PHOTOELECTRIC CELL
PF	POWER FACTOR
PG	
pH	MEASURE OF ACIDITY OR ALKALINITY
PH	PHASE
PIOP	PLC I/O PANEL
PLC	PROGRAMMABLE LOGIC CONTROLLER
PNL	PANEL
PNLBD	PANELBOARD
POSN	POSITION
POT	POTENTIOMETER
PPS	PACKAGED POWER SUPPLY
PRI	PRIMARY
PSH	PRESSURE SWITCH HIGH
PWR	POWER
(R)	RELOCATED
RCPT	RECEPTACLE
RCT	REPEAT CYCLE TIMER
REF	REFERENCE
RT	RESET TIMER
SCCR	SHORT CIRCUIT CURRENT RATING
SCR	SILICON CONTROLLED RECTIFIER
SD	SMOKE DETECTOR
SIG	SIGNAL
SN	SOLID NEUTRAL
SPD	SURGE PROTECTION DEVICE
SPDT	SINGLE POLE, DOUBLE THROW
SPST	SINGLE POLE, SINGLE THROW
SST	STAINLESS STEEL
SV	SOLENOID VALVE
SW	SWITCH
SWBD	SWITCHBOARD
SWGR	SWITCHGEAR
SYNC	SYNCHRONIZING
TB	TERMINAL BLOCK
TC	TELEPHONE CABINET
TEL	TELEPHONE
TER	TERMINAL
TO	TIMED OPENING
TOA	TEST–OFF–AUTOMATIC
TSP	TWISTED SHIELDED PAIR
TST	TWISTED SHIELDED TRIAD
TVSS	TRANSIENT VOLTAGE SURGE SUPPRESSOR
UGND	UNDERGROUND
UPS	UNINTERRUPTIBLE POWER SUPPLY
VA	VOLT–AMPERES
VAR	VOLT AMPERES REACTIVE
VFD	VARIABLE FREQUENCY DRIVE
VH	VAR–HOUR
VS	VOLTMETER SWITCH
W	WIRE, WATTS
WH	WATTHOUR METER
WHDM	WATTHOUR DEMAND METER
WP	WEATHERPROOF
WR	WEATHER RESISTANT
WT	WATERTIGHT
WWR	WASHWATER RECOVERY
XFMR	TRANSFORMER

PLAN SYMBOLS

- OVERHEAD POWER LINE
- UNDERGROUND POWER
- UNDERGROUND DUCT LINE (CONC. ENCASEMENT)
- UNDERGROUND DIRECT BURIAL CONDUITS
- CONDUIT CONCEALED IN FLOOR, WALL OR CEILING
- EXPOSED CONDUIT
- ¾"C–3#12 — CALLOUT INDICATING CONDUIT SIZE, NUMBER OF WIRES AND WIRE SIZE
- P2005 — CALLOUT INDICATING CONDUIT PER SCHEDULE
- CONDUIT RUN, HATCH MARKS INDICATE NUMBER OF #12 CONDUCTORS, NO HATCH MARKS IS (2) #12 AND (1) #12 GND
- HOME RUN TO PANELBOARD OR AS INDICATED
- FLEXIBLE CONDUIT
- CONDUIT RUN, BROKEN AND CONTINUED SAME SHEET OR AS NOTED
- CONDUIT WITH SEAL FITTING
- CAP ON CONDUIT STUB
- OPEN CIRCLE DENOTES UPWARD CONDUIT RISER
- SOLID CIRCLE DENOTES DOWNWARD CONDUIT RISER
- INDICATES REMOVAL
- CABLE TRAY
- SURFACE MOUNTED PANELBOARD
- FLUSH MOUNTED PANELBOARD
- LOCAL CONTROL STATION
- 30A(F–20A) — CONTROL STATION W/SAFETY SWITCH (SEE NOTE P4)
- EQUIPMENT MOUNTING STAND
- M — MOTOR
- 30A(F–20A) — SAFETY SWITCH (SEE NOTE P4)
- 30A(F–20A) — COMBINATION MOTOR STARTER AND SAFETY SWITCH (SEE NOTE P4)
- S MS — MANUAL MOTOR STARTER
- GROUND ROD AND BOX
- GROUNDING BRANCH CONNECTION
- # — CONDUIT NUMBER, P–POWER, C–CONTROL, S–SIGNAL
- $(a,b)* — SINGLE POLE SWITCH *(SEE NOTES P2 & P3) 2 = 2 POLE, 3 = 3 WAY, 4 = 4 WAY, K = KEY OPERATED, WP = WEATHERPROOF; D = DIMMER; P = SWITCH WITH PILOT LIGHT; M = HP RATED, LOCKABLE; OS =OCCUPANCY SENSOR
- (a,b) — FLUORESCENT FIXTURE (SEE NOTES P2 & P3)
- WALL/CEILING MOUNTED FIXTURE
- POLE MOUNTED FIXTURE
- WALL/CEILING MOUNTED EXIT LIGHT – DIRECTIONAL ARROW WHERE INDICATED, SHADED AREA INDICATES ILLUMINATED FACE
- WALL/CEILING MOUNTED EMERGENCY LIGHT WITH REMOTE BATTERY
- PE — PHOTO ELECTRIC CELL
- EMERGENCY LIGHT WITH SELF CONTAINED BATTERY
- A — LIGHT FIXTURE IDENTIFICATION
- SINGLE RECEPTACLE, 120V
- SINGLE RECEPTACLE, 208V/240V
- CKT TYPE — DUPLEX WALL RECEPTACLE, 120V WP = WEATHERPROOF, G = GROUNDED, IG = ISOLATED GROUND, GF = GROUND FAULT INTERRUPTER
- DOUBLE DUPLEX, 120V
- DUPLEX FLOOR RECEPTACLE, 120V
- X IN. — MULTI–OUTLET ASSEMBLY WITH SINGLE RECEPTACLE, 120V SPACING (X INCHES) AS NOTED MOUNTING HEIGHT AS NOTED
- SPECIAL PURPOSE WALL RECEPTACLE, RATING AS NOTED
- J — FLOOR, WALL AND CEILING JUNCTION BOXES
- WALL TELEPHONE OUTLET (+12")
- WALL TELEPHONE OUTLET (+60")
- FLOOR TELEPHONE OUTLET
- B — BELL/BUZZER
- ELECTRIC METER SOCKET
- MH HH — MANHOLE OR HANDHOLE
- EQUIPMENT CONNECTION
- INSTRUMENT
- MCC–D — EQUIPMENT ID #
- T — THERMOSTAT

FIRE ALARM

- FACP — FIRE ALARM CONTROL PANEL
- F — MANUAL PULL STATION
- F — HORN AND STROBE

PLAN SYMBOL NOTES

P1 CONDUIT SIZE AND FILL SHALL BE AS INDICATED. WHERE NO SIZE IS SHOWN, THE CONDUIT SHALL BE SIZED IN ACCORDANCE WITH THE EDITION OF THE NATIONAL ELECTRICAL CODE ADOPTED BY THE AUTHORITY HAVING CODE ENFORCEMENT JURISDICTION. WHERE NO FILL IS INDICATED, PROVIDE (3) #12 WIRES. PROVIDE 3/16 INCH NYLON PULL ROPE IN EACH EMPTY CONDUIT.

P2 LOWER CASE LETTERS IN PARENTHESIS ADJACENT TO A SWITCH OR LIGHT FIXTURE INDICATE A SWITCHED CIRCUIT AND IDENTIFY THE FIXTURE/SWITCH COMBINATIONS. FOR FOUR LAMP FLUORESCENT FIXTURES WIRED IN PAIRS WITHIN EACH FIXTURE, THE "a" SWITCH CONTROLS THE OUTER LAMPS AND THE "b" SWITCH CONTROLS THE INNER LAMPS. WIRE 3 LAMP FIXTURES SIMILARLY.

P3 NUMBERS IN PARENTHESIS ADJACENT TO A LIGHT FIXTURE OR RECEPTACLE INDICATE THE LIGHTING PANEL BRANCH CIRCUIT FEEDING THE DEVICE.

P4 NUMBER INDICATES THE AMPERAGE RATING OF THE SWITCH. IDENTIFIERS IN PARENTHESIS INDICATE THAT THE SWITCH IS PROVIDED WITH FUSES AND THE AMPERAGE RATING OF THE FUSE(S).

SINGLE LINE SYMBOLS

- GROUND CONNECTION
- SWITCH, 3 POLE EXCEPT WHERE NOTED. RATING IN AMPERES AS NOTED (NOTE 1)
- TEST SWITCH WITH SHORTING BLOCK
- AUTOMATIC TRANSFER SWITCH 3 POLE, RATING AS NOTED
- SV — SHUNT TRIP
- FUSE
- FUSE CUTOUT
- 20A 3P, 000AF 000AT — CIRCUIT BREAKER, 3 POLE EXCEPT WHERE NOTED. RATING IN AMPERES AS NOTED.
- POWER CIRCUIT BREAKER DRAWOUT ABOVE 1500V RATING AS NOTED
- SURGE ARRESTER
- CURRENT TRANSFORMER
- VOLTAGE TRANSFORMER
- POWER OR DISTRIBUTION TRANSFORMER RATING AS NOTED
- 7.5 EQUIPMENT NAME EQUIPMENT ID # — MOTOR. NUMBER INDICATES HORSEPOWER
- G — GENERATOR
- LINE REACTOR
- BUS STAB ON MCC OR SWITCHGEAR, CORD & PLUG CONNECTION FOR MOTORS
- THERMAL OVERLOAD
- * — A – AMMETER, *V – VOLTMETER, WH – WATTHOUR METER, GS – GROUND FAULT SENSOR
- AS — AMMETER SWITCH
- VS — VOLTMETER SWITCH
- 3 — ELEMENTARY DIAGRAM NUMBER
- KIRK KEY INTERLOCK
- POWER RECEPTACLE FOR PORTABLE EQUIPMENT
- TERMINATOR/POTHEAD
- SPLICE, TERMINATION
- 1* — MOTOR STARTER. NUMBER INDICATES NEMA SIZE *(NONE) FULL VOLTAGE NONREVERSING, A = AUTOTRANSFORMER REDUCED VOLTAGE, SS = SOLID STATE, –2S = TWO SPEED
- CAPACITOR – KVAR INDICATED
- VACUUM BREAK SWITCH
- M — UTILITY REVENUE METER
- VFD ### — VARIABLE FREQUENCY DRIVE
- 1* — SOLID STATE SOFT START MOTOR CONTROLLER
- P200 — CALLOUT INDICATING CONDUIT AND WIRE PER SCHEDULE

LOOP WIRING/ELEMENTARY DIAGRAM SYMBOLS

- FUSE. RATING IN AMPERES
- M — MOTOR
- ETM — ELAPSED TIME METER
- CR1 — CONTROL DEVICE COIL. NUMBER, WHEN USED, DISTINGUISHES BETWEEN DEVICES OF THE SAME TYPE.
  - ALT – ALTERNATOR
  - CR – CONTROL RELAY
  - GR – GENERAL RELAY
  - ISR – INTRINSICALLY SAFE RELAY
  - LR – LATCH RELAY
  - SV – SOLENOID VALVE
  - PR – PROBE RELAY
  - TR – TIMING RELAY
  - TOF – TIMING OFF RELAY
  - MPR – MODE PRIORITY RELAY
- W — PUSH–TO–TEST
- W — INDICATING LIGHT
  - INDICATING LIGHT COLORS:
  - A – AMBER, B – BLUE, C – CLEAR, G – GREEN, R – RED, N – NEON, W – WHITE, Y – YELLOW
- TERMINAL
- OPEN CLOSED — SWITCH
- OPEN CLOSED — PUSHBUTTON,
- SWITCH, 3–POLE
- MULTI–POSITION SELECTOR SWITCH
- H O A — HAND–OFF–AUTOMATIC SWITCH
- H O R — HAND–OFF–REMOTE SWITCH
- WIRING INSIDE ENCLOSURE
- FIELD WIRING
- MOTOR HTR — MOTOR HEATER
- BUS STAB ON MCC, CORD & PLUG CONNECTION FOR MOTORS
- THERMAL OVERLOAD
- BUZZER
- HORN
- BELL
- 20A 3P — CIRCUIT BREAKER
- SOLENOID VALVE

SENSING SWITCHES		
CLOSE ON		SENSED VARIABLE
RISING	FALLING	
		FLOW
		LEVEL
		PRESSURE
		TEMPERATURE
LIMIT SWITCHES		
LS		CLOSE ON REACHING LIMIT
LS		CLOSE ON LEAVING LIMIT

TIMED CONTACTS			
SYMBOL	NORMAL	OPEN TO CLOSED	CLOSED TO OPEN
	OPEN	DELAYED	INSTANTANEOUS
	CLOSED	INSTANTANEOUS	DELAYED
	OPEN	INSTANTANEOUS	DELAYED
	CLOSED	DELAYED	INSTANTANEOUS

ELEMENTARY DIAGRAMS

E1 "NORMAL" STATUS OF SWITCHES OR CONTACTS IS THE SHELF POSITION.

E2 NUMBERS AND LETTERS IDENTIFY DEVICE.

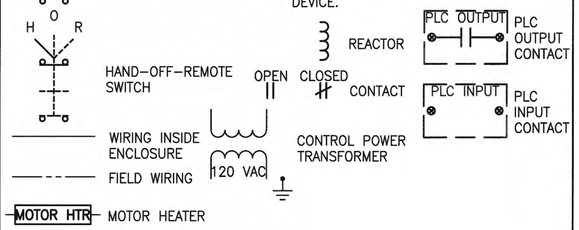

GENERAL NOTES

G1 THE INSTALLATION OF ALL EQUIPMENT SHOWN ON THESE DRAWINGS OR DESCRIBED IN THE SPECIFICATIONS SHALL CONFORM TO THE REQUIREMENTS SET FORTH IN THE LATEST EDITIONS OF ALL APPLICABLE CODES AND UTILITY COMPANY STANDARDS. CONTACT THE UTILITY COMPANY REPRESENTATIVES AND VERIFY THEIR REQUIREMENTS.

G2 THIS IS A GENERALIZED LEGEND SHEET. THIS CONTRACT MAY NOT USE ALL INFORMATION SHOWN.

G3 NOTIFY THE ENGINEER IMMEDIATELY IF CONFLICTS IN EQUIPMENT LOCATIONS ARE DISCOVERED OR IF PROBLEMS ARISE DUE TO FIELD CONDITIONS, LACK OF INFORMATION OR ANY OTHER REASON.

G4 INFORMATION SHOWN MAY NOT BE ALL INCLUSIVE. SEE ALSO ANSI C37.2, Y1.1, Y32.2, AND Y32.9.

G5 REFER TO THE MECHANICAL DRAWINGS FOR EXACT LOCATIONS OF MECHANICAL EQUIPMENT AND FOR CERTAIN CONNECTIONS TO BE MADE TO ELECTRICAL CIRCUITS.

G6 EQUIPMENT SHOWN IN ½ TONE OR GREY TONE ARE EXISTING OR BY OTHERS.

G7 VERIFY ALL COLOR REQUIREMENTS BEFORE ORDERING MATERIALS.

Port of Tacoma
P.O. BOX 1837 TACOMA, WA 98401 (253)383-5841

Parametrix
ENGINEERING . PLANNING . ENVIRONMENTAL SCIENCES
60 WASHINGTON AVENUE, SUITE 390
BREMERTON, WA 98337
P 360.377.0014
WWW.PARAMETRIX.COM

MARK:	REVISION:	BY:	APPR:	DATE:

AGS MAR 2018 CHECKED BY DATE
JEM APR 2018 PROJ. ENGR DATE
Apr 25, 2018 DIRECTOR ENG. DATE
APPROVED:

WEST SITCUM
STORMWATER TREATMENT
ELECTRICAL LEGEND AND ABBREVIATIONS

PRINTED BY: peterden Apr 25, 2018
PORT ADDRESS: ONE SITCUM PLAZA, TACOMA, WA 98401-1837

TOWNSHIP: 21N | RANGE: 3E | SECTIONS: 33 & 34
DAT–HRZ: WA83–S | VERT: MLLW
PARCEL: SEE G02 | DRAWING SCALE: AS NOTED

CONT/CONS: 070664
M. ID: 201024.01
PHASE: BID SET

6583
E01
SH 38 OF 47

THIS DRAWING IS THE PROPERTY OF THE PORT OF TACOMA AND SHALL NOT BE USED ON OTHER WORK, DISCLOSED, COPIED, IN WHOLE OR IN PART, WITHOUT WRITTEN PERMISSION

APRIL 25, 2018

PORT OF TACOMA FILE: U:\PSO\Projects\Clients\8001-NW Seaport Alliance\553-8001-001 West Sitcum\99Svcs\CADD\DWG\PS8001001E-01

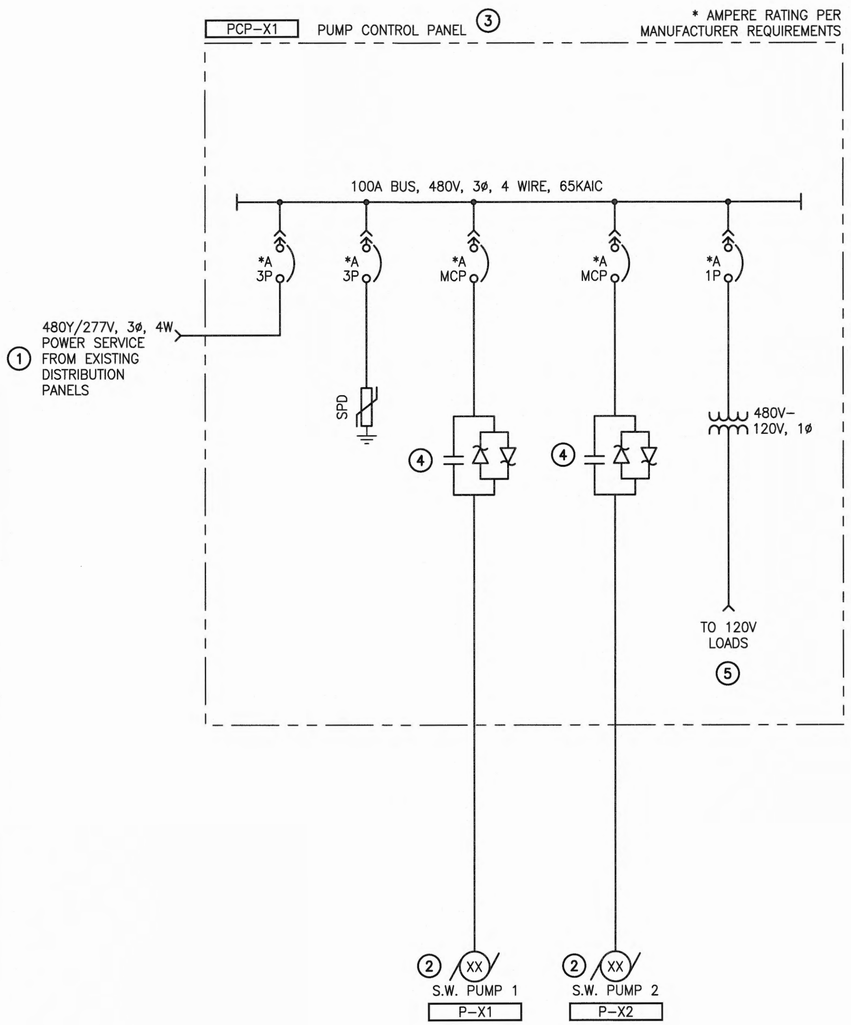

DISTRIBUTION PANEL SCHEDULE

v 1.0

NAME: PANEL #26

VOLTAGE RATING: **277/480Y VOLTS, 3 PHASE, 4 WIRE**
BUS RATING: **100** AMPS
MAIN BREAKER: **MLO** AMPS
FEED: **BOTTOM**
MOUNTING: **SURFACE**
SPECIAL FEATURES: **22,000 AIC**

LOCATION: **BASIN A LIGHT POLE**
FED FROM: **UNKNOWN**
NOTES:

LOAD TYPE	CIRCUIT DESCRIPTION	VA	CKT	BRKR	L1 L2 L3	BRKR	CKT	VA	CIRCUIT DESCRIPTION	LOAD TYPE
L	AREA LIGHT - NORTH	3,324	1	15 / 1	-A-	15 / 1	2	3,324	AREA LIGHT - NORTH	L
	SPACE		3	/ 1	-B-	15 / 1	4	3,324	SECURITY LIGHT	L
	SPACE		5	/ 1	-C-	/ 1	6		SPACE	
L	AREA LIGHT - NORTH	3,324	7	15 / 1	-A-		8	**9,750**		**M**
	SPACE		9	/ 1	-B-	**50 / 3**	10	**9,750**	**PUMP CONTROL PANEL: PCP-A1**	**M**
	SPACE		11	/ 1	-C-		12	**9,750**		**M**
	LINE LOADS:	**19,722 VA(L1)**			**13,074 VA(L2)**			**9,750 VA(L3)**		
	TOTAL LOAD:	**42.55 KVA**			**51.2 AMPS**					

PANEL #26 LOAD CALCULATION:

		CONNECTED VA	METHOD	NEC DEMAND	CALC. VA
TOTAL LIGHTING (L) LOAD:	L	13296	ALL @	100%	13296
TOTAL RECEPTACLE (R) LOAD:	R	0	FIRST 10KVA @	100%	0
			REMAINDER OVER 10KVA	50%	0
TOTAL MOTOR (M) LOAD:	M	**29250**	**ALL @**	**100%**	**29250**
	LM	0	125% OF LARGEST	125%	0
TOTAL HVAC (H) LOAD:	H	0	ALL @	100%	0
TOTAL MISCELLANEOUS (X) LOAD:	X	0	ALL @	100%	0
TOTAL VA:		**42546 VA**			**42546 VA**
AVERAGE AMPS @		**51 AMPS**			**51 AMPS**
VOLTAGE PHASE TO PHASE=	480				

DISTRIBUTION PANEL SCHEDULE

v 1.0

NAME: REEFER ROW PANEL

VOLTAGE RATING: **277/480Y VOLTS, 3 PHASE, 4 WIRE**
BUS RATING: **800** AMPS
MAIN BREAKER: **800** AMPS
FEED: **BOTTOM**
MOUNTING: **SURFACE**
SPECIAL FEATURES:

LOCATION: **BASIN B LIGHT POLE**
FED FROM: **UNKNOWN**
NOTES:

LOAD TYPE	CIRCUIT DESCRIPTION	VA	CKT	BRKR	L1 L2 L3	BRKR	CKT	VA	CIRCUIT DESCRIPTION	LOAD TYPE
H		50,000	1		-A-		2	**6,300**		**M**
H	NORTH REEFER RECEPTACLES	50,000	3	225 / 3	-B-	**40 / 3**	4	**6,300**	**PUMP CONTROL PANEL: PCP-B1**	**M**
H		50,000	5		-C-		6	**6,300**		**M**
H		56,000	7		-A-		8	50,000		H
H	MIDDLE REEFER RECEPTACLES	56,000	9	250 / 3	-B-	225 / 3	10	50,000	SOUTH REEFER RECEPTACLES	H
H		56,000	11		-C-		12	50,000		H
	LINE LOADS:	**162,300 VA(L1)**			**162,300 VA(L2)**			**162,300 VA(L3)**		
	TOTAL LOAD:	**486.90 KVA**			**585.6 AMPS**					

REEFER ROW PANEL LOAD CALCULATION:

		CONNECTED VA	METHOD	NEC DEMAND	CALC. VA
TOTAL LIGHTING (L) LOAD:	L	0	ALL @	100%	0
TOTAL RECEPTACLE (R) LOAD:	R	0	FIRST 10KVA @	100%	0
			REMAINDER OVER 10KVA	50%	0
TOTAL MOTOR (M) LOAD:	M	**18900**	**ALL @**	**100%**	**18900**
	LM	0	125% OF LARGEST	125%	0
TOTAL HVAC (H) LOAD:	H	468000	ALL @	100%	468000
TOTAL MISCELLANEOUS (X) LOAD:	X	0	ALL @	100%	0
TOTAL VA:		**486900 VA**			**486900 VA**
AVERAGE AMPS @		**586 AMPS**			**586 AMPS**
VOLTAGE PHASE TO PHASE=	480				

PANELBOARD SCHEDULE

v 1.0

NAME: PANEL M1

VOLTAGE RATING: **277/480Y VOLTS, 3 PHASE, 4 WIRE**
BUS RATING: **800** AMPS
MAIN BREAKER: **MLO** AMPS
FEED: **BOTTOM**
MOUNTING: **SURFACE**
SPECIAL FEATURES:

LOCATION: **BASIN C LIGHT POLE**
FED FROM: **UNKNOWN**
NOTES:

LOAD TYPE	CIRCUIT DESCRIPTION	VA	CKT	BRKR	L1 L2 L3	BRKR	CKT	VA	CIRCUIT DESCRIPTION	LOAD TYPE
X		13,840	1		-A-		2	13,840		R
X	480V LIGHTING PANEL L2	13,840	3	100 / 3	-B-	100 / 3	4	13,840	480V RECEPTACLE BULLRAIL VAULT #11	R
X		13,840	5		-C-		6	13,840		R
M		**14,000**	7		-A-		8	13,840		R
M	**PUMP CONTROL PANEL: PCP-C1**	**14,000**	9	100 / 3	-B-	100 / 3	10	13,840	480V RECEPTACLE BULLRAIL VAULT #12	R
M		**14,000**	11		-C-		12	13,840		R
X		13840	13		-A-		14	13,840		R
X	480V LIGHTING PANEL L1	13,840	15	100 / 3	-B-	100 / 3	16	13,840	480V RECEPTACLE BULLRAIL VAULT #13	R
X		13,840	17		-C-		18	13,840		R
			19		-A-		20	11,070		M
	SPARE		21	30 / 3	-B-	50 / 3	22	11,070	480V CAPSTAN C1	M
			23		-C-		24	11,070		M
			25		-A-		26	11,070		M
	SPARE		27	60 / 3	-B-	50 / 3	28	11,070	480V CAPSTAN C2	M
			29		-C-		30	11,070		M
			31		-A-	30 / 1	32	6,648	277V WORK LIGHTS	L
	SPARE		33	60 / 3	-B-	30 / 1	34	6,648	277V LP1A	X
			35		-C-	/ 1	36		SPACE	
	120/240V PANEL M2	27,700	37	125 / 1	-A-	/ 1	38		SPACE	
	LINE LOADS:	**139,688 VA(L1)**			**111,988 VA(L2)**			**105,340 VA(L3)**		
	TOTAL LOAD:	**357.02 KVA**			**429.4 AMPS**					

PANEL M1 LOAD CALCULATION:

		CONNECTED VA	METHOD	NEC DEMAND	CALC. VA
TOTAL LIGHTING (L) LOAD:	L	6648	ALL @	100%	6648
TOTAL RECEPTACLE (R) LOAD:	R	124560	FIRST 10KVA @	100%	10000
			REMAINDER OVER 10KVA	50%	57280
TOTAL MOTOR (M) LOAD:	M	**108420**	**ALL @**	**100%**	**108420**
	LM	0	125% OF LARGEST	125%	0
TOTAL HVAC (H) LOAD:	H	0	ALL @	100%	0
TOTAL MISCELLANEOUS (X) LOAD:	X	89688	ALL @	100%	89688
TOTAL VA:		**329316 VA**			**272036 VA**
AVERAGE AMPS @		**396 AMPS**			**327 AMPS**
VOLTAGE PHASE TO PHASE=	480				

2 ONE-LINE DIAGRAM & LOAD CALCULATIONS

SCALE: NOT TO SCALE

NOTES:

1. SEE DRAWINGS C1–C3 FOR EXISTING DISTRIBUTION PANEL LOCATIONS. PROVIDE NEW CIRCUIT BREAKERS IN EXISTING DISTRIBUTION PANELS FOR PUMP STATIONS. SEE SCHEDULES FOR ASSOCIATED FEEDER BREAKER SIZES.
2. TYPICAL ONE LINE DIAGRAM SHOWN. PUMP MOTOR HPs VARY PER BASIN:
   - BASIN A – 20 HP
   - BASIN B – 12 HP
   - BASIN C – 35 HP

   LABEL EQUIPMENT AT EACH BASIN USING THE ASSOCIATED ALPHABETIC IDENTIFIER.
3. PROVIDE A SINGLE PUMP CONTROL PANEL FOR EACH BASIN. PUMP CONTROL PANELS SHALL BE PROVIDED BY THE PUMP MANUFACTURER. SIZE ALL COMPONENTS FOR EACH PANEL PER MANUFACTURER REQUIREMENTS. PROVIDE WITH H–O–A AND ALL INDICATIONS AS REQUIRED. SEE SPECIFICATIONS AND DRAWINGS E03, E09, AND E10.
4. ELECTRONIC SOFT STARTER WITH INTERNAL BYPASS CONTACTOR AND OVERLOAD PROTECTION.
5. SEE DRAWINGS E09 AND E10 FOR 120V LOAD REQUIREMENTS.

6. PUMP CONTROL PANELS AND ASSOCIATED FEEDER BREAKERS SIZED FOR SINGLE PUMP OPERATION ONLY. COORDINATE FEEDER BREAKER REQUIREMENTS WITH CONTROL PANEL MANUFACTURER TO ENSURE PROPER COORDINATION.

Port of Tacoma
P.O. BOX 1837 TACOMA, WA 98401 (253)383-5841

Parametrix
ENGINEERING · PLANNING · ENVIRONMENTAL SCIENCES
520 WASHINGTON AVENUE, SUITE 3390
BREMERTON, WA 98337
P 360.377.0014
WWW.PARAMETRIX.COM

MARK:	REVISION:	BY:	APPR:	DATE:

STATE OF WASHINGTON · JAMES E. MUNTHY · 55697 · REGISTERED PROFESSIONAL ENGINEER
APRIL 25, 2018

APPROVED:
DIRECTOR ENG. DATE

AGS MAR 2018			
CHECKED BY DATE			
JEM APR 2018			
PROJ. ENGR DATE			
PRINTED BY: peterden Apr 25, 2018			
PORT ADDRESS: ONE SITCUM PLAZA TACOMA, WA 98401-1837			

WEST SITCUM STORMWATER TREATMENT
ONE-LINE DIAGRAM AND LOAD CALCULATIONS

6583
E02
SH 39 OF 47

CONT/CONS: 070664	TOWNSHIP: 21N	RANGE: 3E	SECTIONS: 33 & 34
M. ID: 201024.01	DAT–HRZ: WA83–S	VERT: MLLW	
PHASE: BID SET	PARCEL: SEE G02	DRAWING SCALE: AS NOTED	

THIS DRAWING IS THE PROPERTY OF THE PORT OF TACOMA AND SHALL NOT BE USED ON OTHER WORK, DISCLOSED, COPIED, IN WHOLE OR IN PART, WITHOUT WRITTEN PERMISSION

BINDING EDGE

PORT OF TACOMA FILE: U:\PSO\Projects\Clients\8001-NW Seaport Alliance\553-8001-001 West Sitcum\99Svcs\CADD\DWG\PS8001001E-02

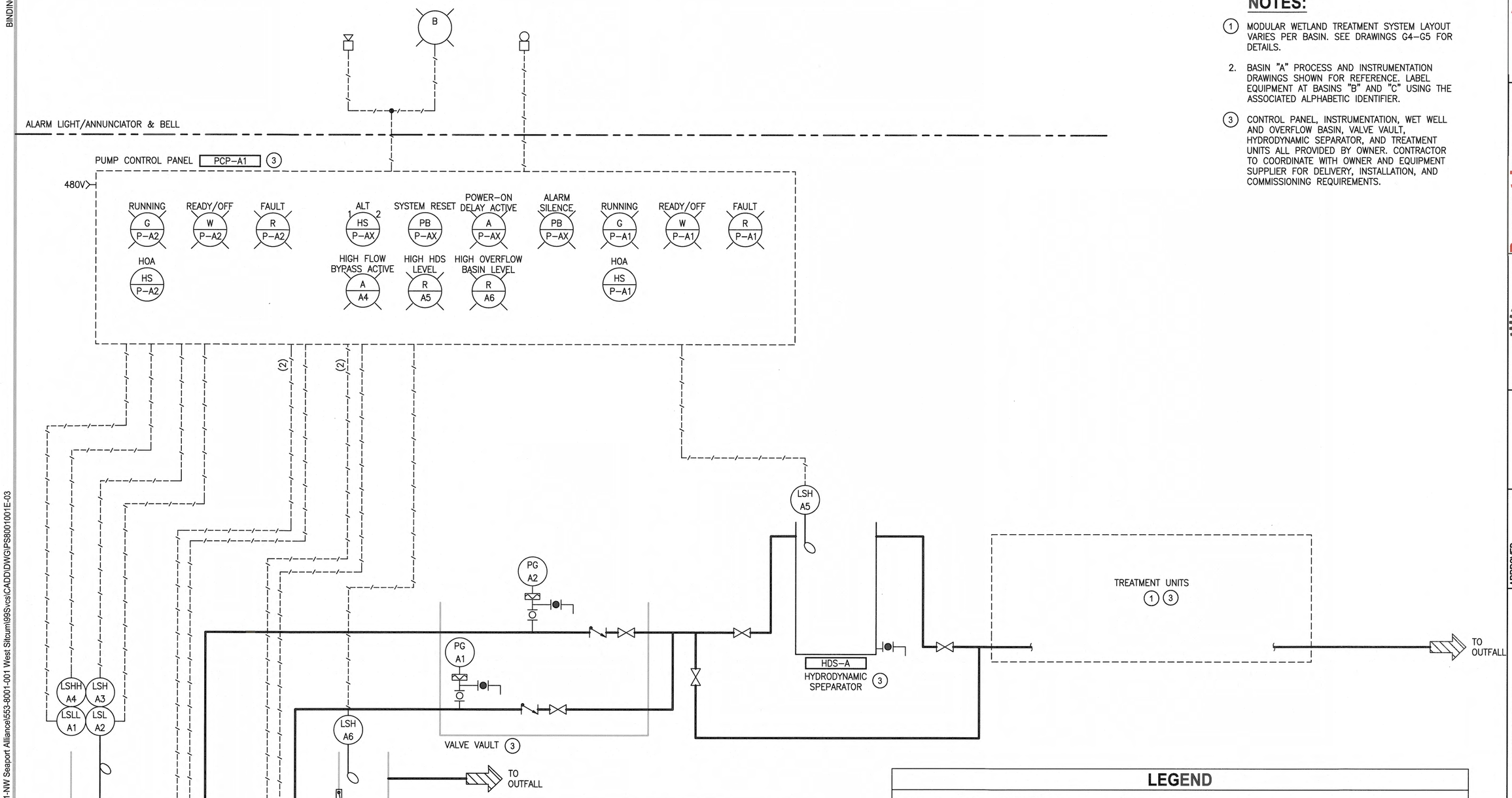

NOTES:

1. MODULAR WETLAND TREATMENT SYSTEM LAYOUT VARIES PER BASIN. SEE DRAWINGS G4–G5 FOR DETAILS.
2. BASIN "A" PROCESS AND INSTRUMENTATION DRAWINGS SHOWN FOR REFERENCE. LABEL EQUIPMENT AT BASINS "B" AND "C" USING THE ASSOCIATED ALPHABETIC IDENTIFIER.
3. CONTROL PANEL, INSTRUMENTATION, WET WELL AND OVERFLOW BASIN, VALVE VAULT, HYDRODYNAMIC SEPARATOR, AND TREATMENT UNITS ALL PROVIDED BY OWNER. CONTRACTOR TO COORDINATE WITH OWNER AND EQUIPMENT SUPPLIER FOR DELIVERY, INSTALLATION, AND COMMISSIONING REQUIREMENTS.

TAG	DESCRIPTION
LSLL–A1	LOW LOW WET WELL LEVEL FLOAT SWITCH
LSL–A2	LOW WET WELL LEVEL / PUMP OFF FLOAT SWITCH
LSH–A3	HIGH WET WELL LEVEL / PUMP ON FLOAT SWITCH
LSHH–A4	HIGH HIGH WET WELL LEVEL FLOAT SWITCH
LSH–A5	HIGH HDS LEVEL FLOAT SWITCH
LSH–A6	HIGH OVERFLOW BASIN LEVEL FLOAT SWITCH

LEGEND

- MAIN PROCESS FLOW
- ELECTRICAL SIGNAL (ANALOG)
- ELECTRICAL SIGNAL (DISCRETE)
- XXX–000 EQUIPMENT ID TAG
- M MOTOR
- SUBMERSIBLE PUMP
- FLOAT SWITCH
- GATE VALVE
- BALL VALVE
- SWING CHECK VALVE
- DIAPHRAGM SEAL
- CAP OR PLUG
- XXX 000 DISCRETE FIELD–MOUNTED INSTRUMENT
- XXX 000 DISCRETE PANEL–MOUNTED INSTRUMENT
- XXX 000 FIELD–MOUNTED INDICATOR LIGHT
- XXX 000 PANEL–MOUNTED INDICATOR LIGHT

Port of Tacoma
P.O. BOX 1837 TACOMA, WA 98401 (253)383-5841

Parametrix
ENGINEERING. PLANNING. ENVIRONMENTAL SCIENCES
60 WASHINGTON AVENUE, SUITE 390
BREMERTON, WA 98337
P 360.377.0014
WWW.PARAMETRIX.COM

MARK:	REVISION:	BY:	APPR:	DATE:

WASHINGTON STATE BASSE MURPHY REGISTERED PROFESSIONAL ENGINEER 53857 APRIL 25, 2018

AGS MAR 2018 CHECKED BY DATE
JEM APR 2018 PROJ. ENGR DATE
PRINTED BY: peterden Apr 25, 2018
PORT ADDRESS: ONE SITCUM PLAZA TACOMA, WA 98401–1837

APPROVED: Jane Cantarbury 4/26/18
DIRECTOR ENG. DATE

WEST SITCUM STORMWATER TREATMENT

PIPING & INSTRUMENTATION DIAGRAM - BASIN A

TOWNSHIP: 21N RANGE: 3E SECTIONS: 33 & 34
DAT–HRZ: WA83–S VERT: MLLW
PARCEL: SEE G02 DRAWING SCALE: AS NOTED

6583
E03
SH 40 OF 47

CONT/CONS: 070664
M. ID: 201024.01
PHASE: BID SET

THIS DRAWING IS THE PROPERTY OF THE PORT OF TACOMA AND SHALL NOT BE USED ON OTHER WORK, DISCLOSED, COPIED, IN WHOLE OR IN PART, WITHOUT WRITTEN PERMISSION

PORT OF TACOMA FILE: U:\PSO\Projects\Clients\8001-NW Seaport Alliance\553-8001-001 West Sitcum\99Svcs\CADD\DWG\PS8001001E-03

BINDING EDGE

NOTES:

1. NATIONAL ELECTRIC CODE CLASS 1, DIVISION 2, GROUP D HAZARDOUS AREA. ALL EQUIPMENT SHALL BE RATED ACCORDINGLY.
2. PROVIDE #2/0 BARE COPPER GROUNDING CONDUCTOR. ATTACH TO GROUND RODS PER DETAIL 1/E07
3. PROVIDE HEAT TRACING TO FIVE AREAS. SEE MECHANICAL PLANS FOR EXACT LOCATIONS. LOCATE CONTROLLER(S) IN LOCATIONS THAT DO NOT INTERFERE WITH OPERATION AND MAINTENANCE. PROVIDE COMPLETE HEAT TRACING SYSTEM DESIGN. DAISY-CHAIN CONTROLLERS TOGETHER AS NEEDED. PROVIDE REQUIRED GROUND FAULT PROTECTION FOR HEAT TRACE CIRCUITS PER NEC REQUIREMENTS.
4. MOTORS AND PUMP POWER AND CONTROL CABLES PROVIDED BY OWNER. CONTRACTOR TO COORDINATE WITH OWNER AND EQUIPMENT SUPPLIER FOR DELIVERY, INSTALLATION, AND COMMISSIONING REQUIREMENTS.
5. LEVEL SWITCHES, CONTROL PANEL, AND J-BOXES PROVIDED BY OWNER. CONTRACTOR TO COORDINATE WITH OWNER AND EQUIPMENT SUPPLIER FOR DELIVERY, INSTALLATION, AND COMMISSIONING REQUIREMENTS.
6. CONTRACTOR TO PROVIDE WET WELL/OVERFLOW PENETRATIONS FOR ELECTRICAL CONDUIT. COORDINATE LOCATIONS WITH EQUIPMENT SUPPLIER.

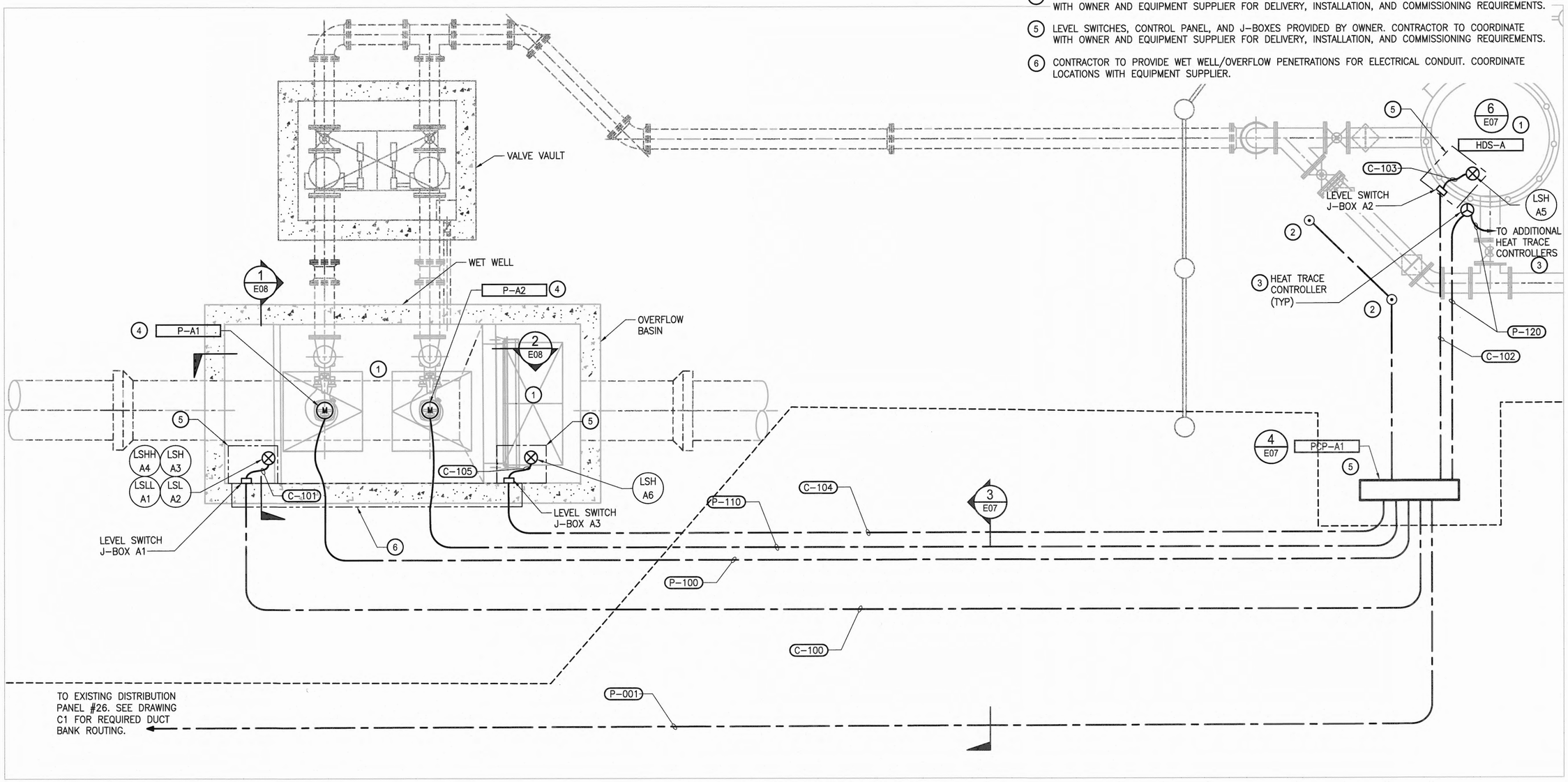

ELECTRICAL SITE PLAN - BASIN A

SCALE: 3/8" = 1'-0"

Port of Tacoma
P.O. BOX 1837 TACOMA, WA 98401 (253)383-5841

Parametrix
ENGINEERING • PLANNING • ENVIRONMENTAL SCIENCES
1019 WASHINGTON AVENUE, SUITE 395
BREMERTON, WA 98337
P 360.377.0014
WWW.PARAMETRIX.COM

MARK:	REVISION:	BY:	APPR:	DATE:

APPROVED: 4/26/18
DIRECTOR ENG. DATE

AGS MAR 2018 CHECKED BY DATE
JEM APR 2018 PROJ. ENGR DATE
PRINTED BY: peterden Apr 25, 2018
PORT ADDRESS: ONE SITCUM PLAZA TACOMA, WA 98401-1837

WEST SITCUM
STORMWATER TREATMENT
ELECTRICAL SITE PLAN - BASIN A

TOWNSHIP: 21N	RANGE: 3E	SECTIONS: 33 & 34	
DAT-HRZ: WA83-S	VERT: MLLW		
PARCEL: SEE G02	DRAWING SCALE: AS NOTED		

6583
E04
SH 41 OF 47

CONT/CONS: 070664
M. ID: 201024.01
PHASE: BID SET

THIS DRAWING IS THE PROPERTY OF THE PORT OF TACOMA AND SHALL NOT BE USED ON OTHER WORK, DISCLOSED, COPIED, IN WHOLE OR IN PART, WITHOUT WRITTEN PERMISSION

PORT OF TACOMA FILE: U:\PSO\Projects\Clients\8001-NW Seaport Alliance\553-8001-001 West Sitcum\99Svcs\CADD\DWG\PS8001001E-04

BINDING EDGE

NOTES:

1. NATIONAL ELECTRIC CODE CLASS 1, DIVISION 2, GROUP D HAZARDOUS AREA. ALL EQUIPMENT SHALL BE RATED ACCORDINGLY.
2. PROVIDE #2/0 BARE COPPER GROUNDING CONDUCTOR. ATTACH TO GROUND RODS PER DETAIL 1/E07
3. PROVIDE HEAT TRACING TO FOUR AREAS. SEE MECHANICAL PLANS FOR EXACT LOCATIONS. LOCATE CONTROLLER(S) IN LOCATIONS THAT DO NOT INTERFERE WITH OPERATION AND MAINTENANCE. PROVIDE COMPLETE HEAT TRACING SYSTEM DESIGN. DAISY-CHAIN CONTROLLERS TOGETHER AS NEEDED. PROVIDE REQUIRED GROUND FAULT PROTECTION FOR HEAT TRACE CIRCUITS PER NEC REQUIREMENTS.
4. MOTORS AND PUMP POWER AND CONTROL CABLES PROVIDED BY OWNER. CONTRACTOR TO COORDINATE WITH OWNER AND EQUIPMENT SUPPLIER FOR DELIVERY, INSTALLATION, AND COMMISSIONING REQUIREMENTS.
5. LEVEL SWITCHES, CONTROL PANEL, AND J-BOXES PROVIDED BY OWNER. CONTRACTOR TO COORDINATE WITH OWNER AND EQUIPMENT SUPPLIER FOR DELIVERY, INSTALLATION, AND COMMISSIONING REQUIREMENTS.
6. CONTRACTOR TO PROVIDE WET WELL/OVERFLOW PENETRATIONS FOR ELECTRICAL CONDUIT. COORDINATE LOCATIONS WITH EQUIPMENT SUPPLIER.

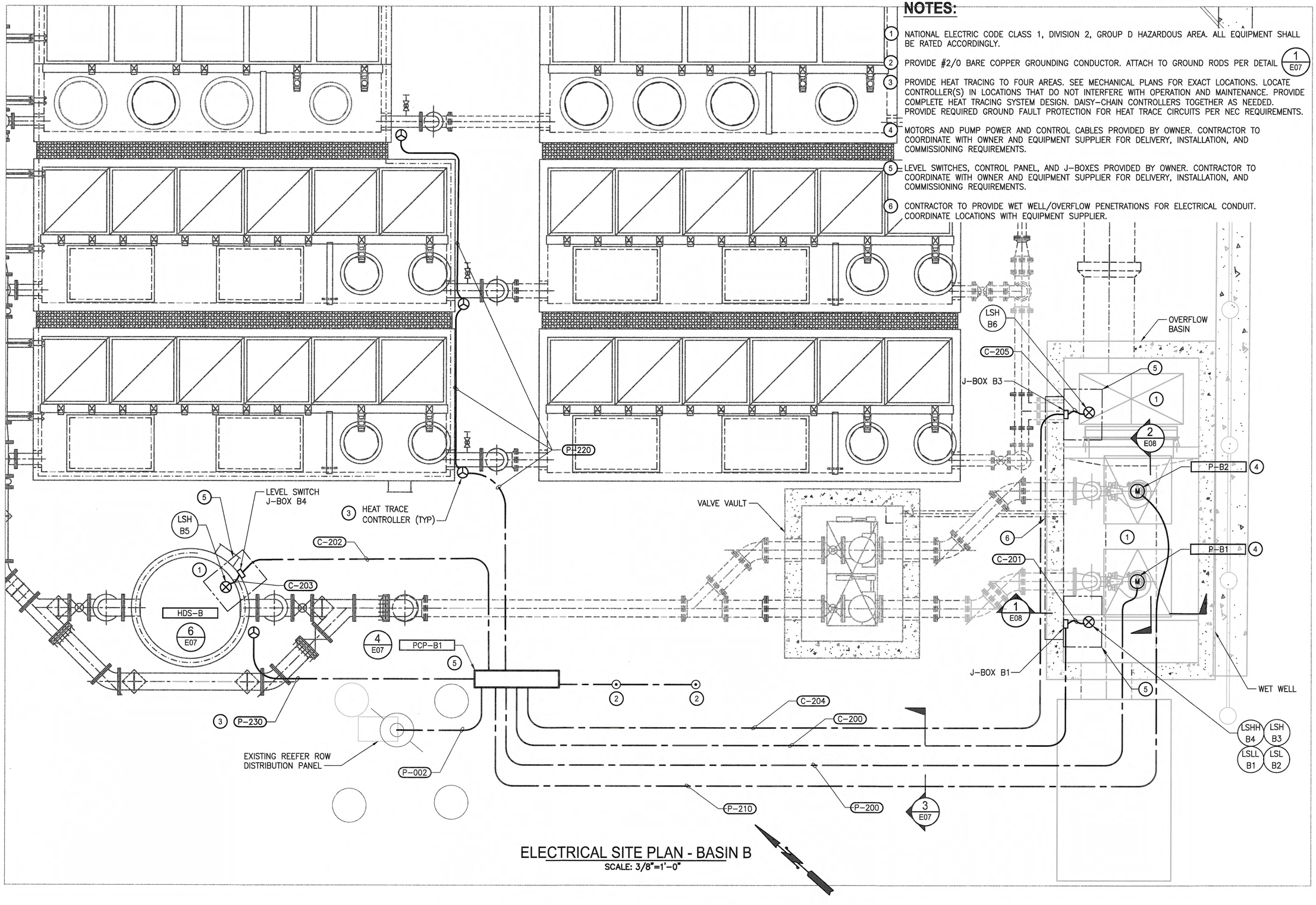

ELECTRICAL SITE PLAN - BASIN B

SCALE: 3/8"=1'-0"

Port of Tacoma
P.O. BOX 1837 TACOMA, WA 98401 (253)383-5841

Parametrix
ENGINEERING · PLANNING · ENVIRONMENTAL SCIENCES
60 WASHINGTON AVENUE, SUITE 390
BREMERTON, WA 98337
P 360.377.0014
WWW.PARAMETRIX.COM

MARK:	REVISION:	BY:	APPR:	DATE:

STATE OF WASHINGTON · JEFFREY MICHAEL MURPHY · 55867 · REGISTERED PROFESSIONAL ENGINEER
APRIL 25, 2018

APPROVED: Jane Vandenberg 4/26/18

WEST SITCUM
STORMWATER TREATMENT
ELECTRICAL SITE PLAN - BASIN B

DIRECTOR ENG.	DATE	
PRINTED BY:	peterden Apr 25, 2018	
PORT ADDRESS:	ONE SITCUM PLAZA TACOMA, WA 98401-1837	

	ACS	MAR 2018	
CHECKED BY		DATE	
	JEM	APR 2018	
PROJ. ENGR		DATE	

TOWNSHIP: 21N	RANGE: 3E	SECTIONS: 33 & 34	
DAT-HRZ: WA83-S	VERT: MLLW		
PARCEL: SEE G02	DRAWING SCALE: AS NOTED		

6583
E05
SH 42 OF 47

CONT/CONS:	070664
M. ID:	201024.01
PHASE:	BID SET

THIS DRAWING IS THE PROPERTY OF THE PORT OF TACOMA AND SHALL NOT BE USED ON OTHER WORK, DISCLOSED, COPIED, IN WHOLE OR IN PART, WITHOUT WRITTEN PERMISSION

BINDING EDGE
PORT OF TACOMA FILE: U:\PSO\Projects\Clients\8001-NW Seaport Alliance\553-8001-001 West Sitcum\99Svcs\CADD\DWG\PS8001001E-05

NOTES:

1. NATIONAL ELECTRIC CODE CLASS 1, DIVISION 2, GROUP D HAZARDOUS AREA. ALL EQUIPMENT SHALL BE RATED ACCORDINGLY.
2. PROVIDE #2/0 BARE COPPER GROUNDING CONDUCTOR. ATTACH TO GROUND RODS PER DETAIL 1/E07
3. PROVIDE HEAT TRACING TO SEVEN AREAS. SEE MECHANICAL PLANS FOR EXACT LOCATIONS. LOCATE CONTROLLER(S) IN LOCATIONS THAT DO NOT INTERFERE WITH OPERATION AND MAINTENANCE. PROVIDE COMPLETE HEAT TRACING SYSTEM DESIGN. DAISY-CHAIN CONTROLLERS TOGETHER AS NEEDED. PROVIDE REQUIRED GROUND FAULT PROTECTION FOR HEAT TRACE CIRCUITS PER NEC REQUIREMENTS.
4. MOTORS AND PUMP POWER AND CONTROL CABLES PROVIDED BY OWNER. CONTRACTOR TO COORDINATE WITH OWNER AND EQUIPMENT SUPPLIER FOR DELIVERY, INSTALLATION, AND COMMISSIONING REQUIREMENTS.
5. LEVEL SWITCHES, CONTROL PANEL, AND J-BOXES PROVIDED BY OWNER. CONTRACTOR TO COORDINATE WITH OWNER AND EQUIPMENT SUPPLIER FOR DELIVERY, INSTALLATION, AND COMMISSIONING REQUIREMENTS.
6. CONTRACTOR TO PROVIDE WET WELL/OVERFLOW PENETRATIONS FOR ELECTRICAL CONDUIT. COORDINATE LOCATIONS WITH EQUIPMENT SUPPLIER.

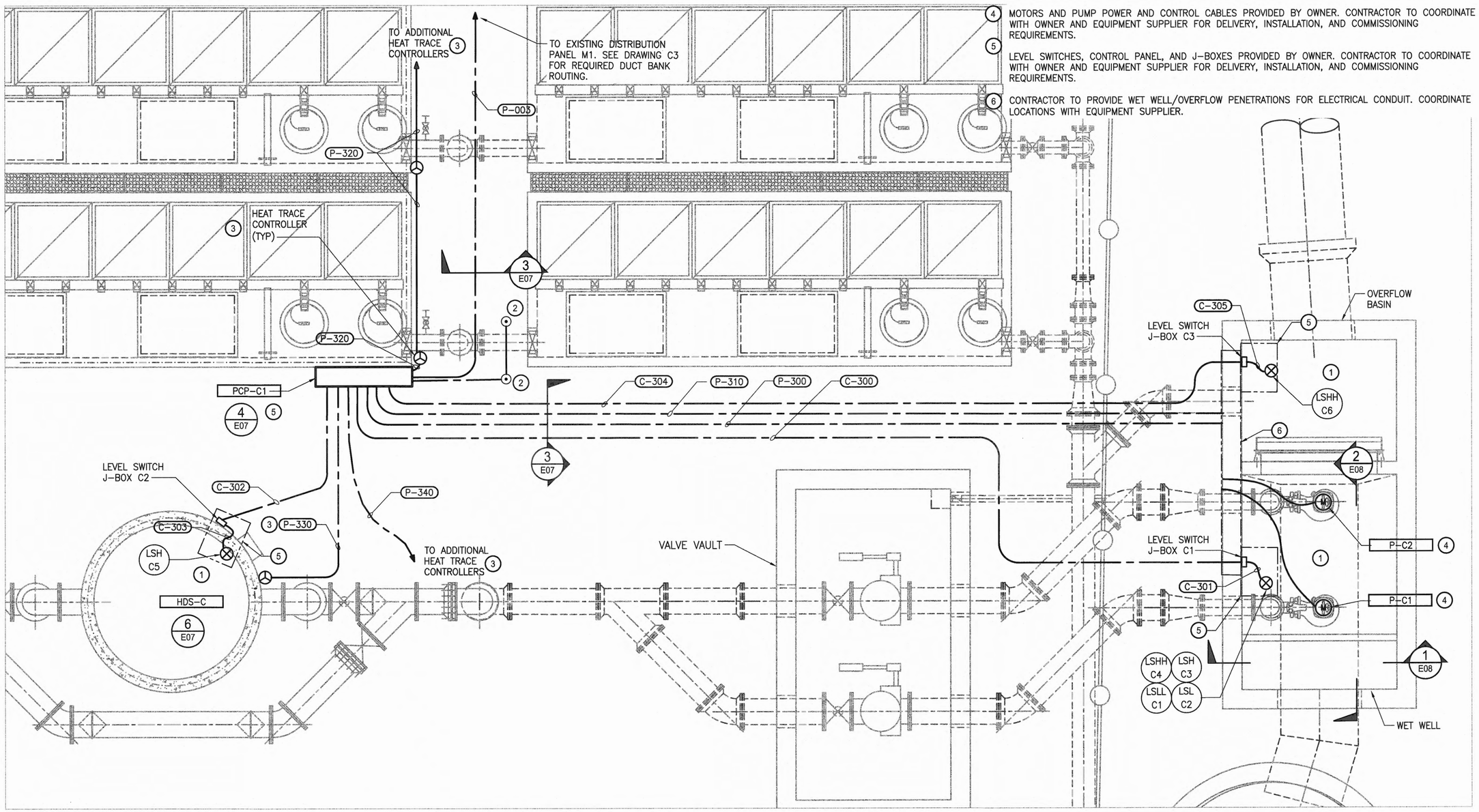

ELECTRICAL SITE PLAN - BASIN C

SCALE: 3/8" = 1'-0"

Port of Tacoma
P.O. BOX 1837 TACOMA, WA 98401 (253)383-5841

Parametrix
ENGINEERING . PLANNING . ENVIRONMENTAL SCIENCES
350 WASHINGTON AVENUE, SUITE 390
BREMERTON, WA 98337
P 360.377.0014
WWW.PARAMETRIX.COM

MARK:	REVISION:	BY:	APPR:	DATE:

AGS MAR 2018 — CHECKED BY DATE
JEM APR 2018 — PROJ. ENGR DATE

APPROVED: 4/26/18
DIRECTOR ENG. DATE

PRINTED BY: peterden Apr 25, 2018
PORT ADDRESS: ONE SITCUM PLAZA TACOMA, WA 98401-1837

WEST SITCUM STORMWATER TREATMENT
ELECTRICAL SITE PLAN - BASIN C

APRIL 25, 2018

6583
E06
SH 43 OF 47

CONT/CONS: 070664	TOWNSHIP: 21N	RANGE: 3E	SECTIONS: 33 & 34
M. ID: 201024.01	DAT-HRZ: WA83-S	VERT: MLLW	
PHASE: BID SET	PARCEL: SEE G02	DRAWING SCALE: AS NOTED	

THIS DRAWING IS THE PROPERTY OF THE PORT OF TACOMA AND SHALL NOT BE USED ON OTHER WORK, DISCLOSED, COPIED, IN WHOLE OR IN PART, WITHOUT WRITTEN PERMISSION

BINDING EDGE
PORT OF TACOMA FILE: U:\PSO\Projects\Clients\8001-NW Seaport Alliance\553-8001-001 West Sitcum\99Svcs\CADD\DWG\PS8001001E-06

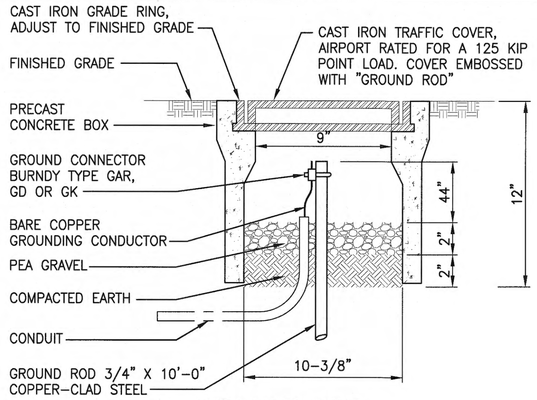

1 GROUND ROD BOX DETAIL

SCALE: NOT TO SCALE

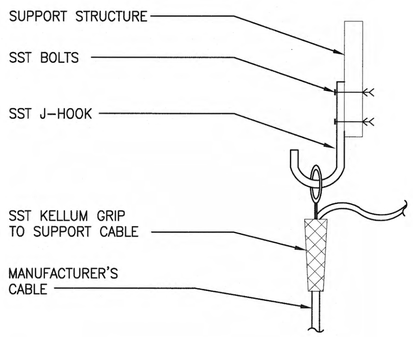

2 KELLUM GRIP CABLE SUPPORT DETAIL

SCALE: NOT TO SCALE

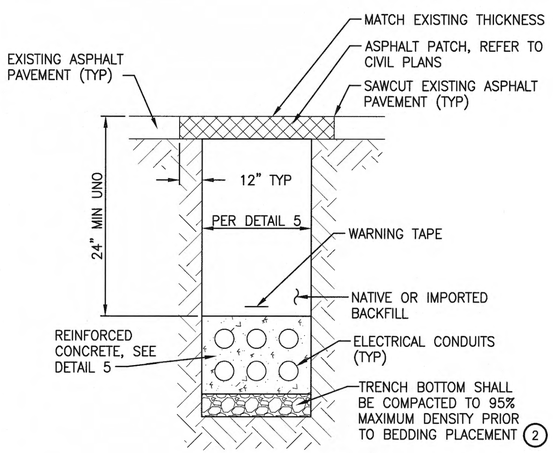

3 TYPICAL TRENCH DETAIL 5

SCALE: NOT TO SCALE

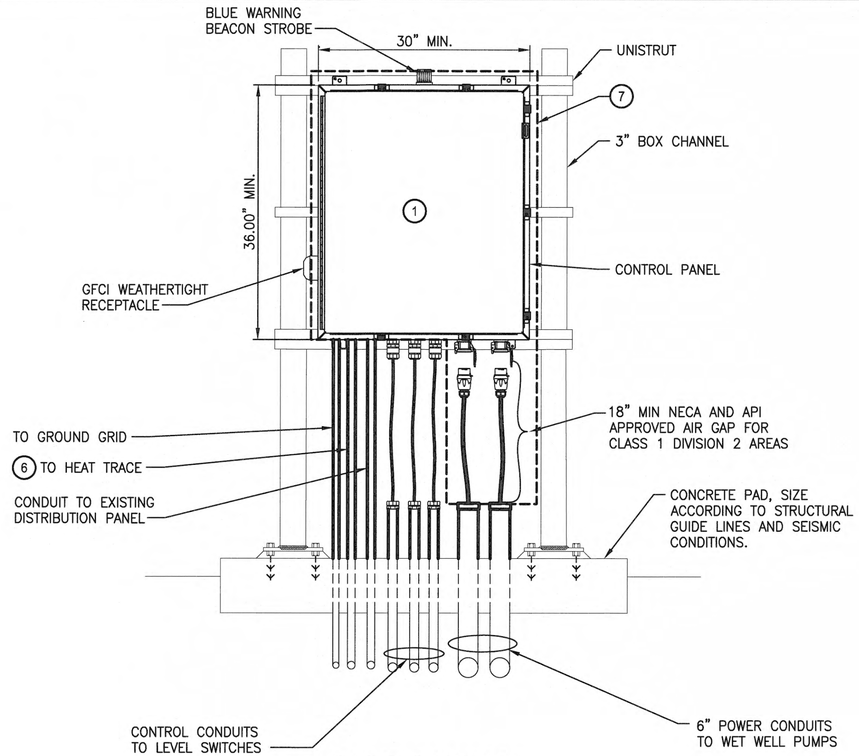

4 PUMP CONTROL PANEL DETAIL

SCALE: NOT TO SCALE

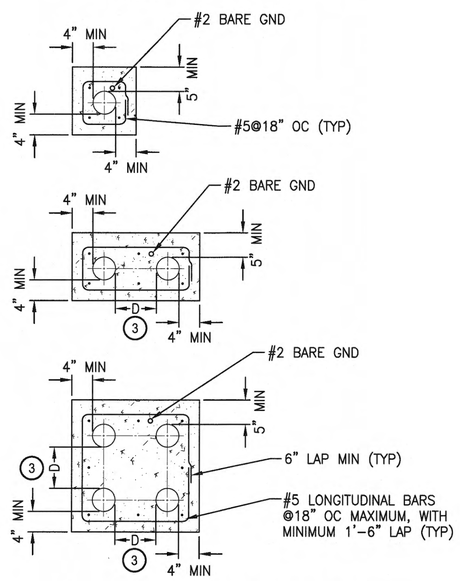

5 TYPICAL DUCTBANK DETAIL 4

SCALE: NOT TO SCALE

NOTES:

1. CONTENTS OF CONTROL PANEL COORDINATED WITH AND SUPPLIED BY PUMP MANUFACTURER.
2. PROVIDE 6" MINIMUM COMPACTED GRAVEL, 1/2" MINUS, UNDER ALL CONCRETE ENCASED DUCT RUNS.
3. D = 3" FOR 2" AND LARGER CONDUITS
   D = 2" FOR CONDUITS SMALLER THAN 2"
4. DUCT BANK CONFIGURATION VARIES PER SITE. CONTRACTOR SHALL CONFIRM EXISTING SITE CONDITIONS AND ADJUST DUCT BANK CONFIGURATION AS NEEDED. CONFIGURATIONS SHALL BE SUBMITTED TO ENGINEER FOR APPROVAL PRIOR TO CONSTRUCTION.
5. LAST 24" OF DUCT BANK INTO A CLASSIFIED AREA SHALL BE PGRS PER NEC REQUIREMENTS.
6. MULTIPLE HEAT TRACE CIRCUITS MAY BE REQUIRED. SEE DRAWINGS E04, E05, E06, AND E08.
7. CONTROL PANEL AND PUMP POWER CABLES PROVIDED BY OWNER. CONTRACTOR TO COORDINATE WITH OWNER AND EQUIPMENT SUPPLIER FOR DELIVERY, INSTALLATION, AND COMMISSIONING REQUIREMENTS.

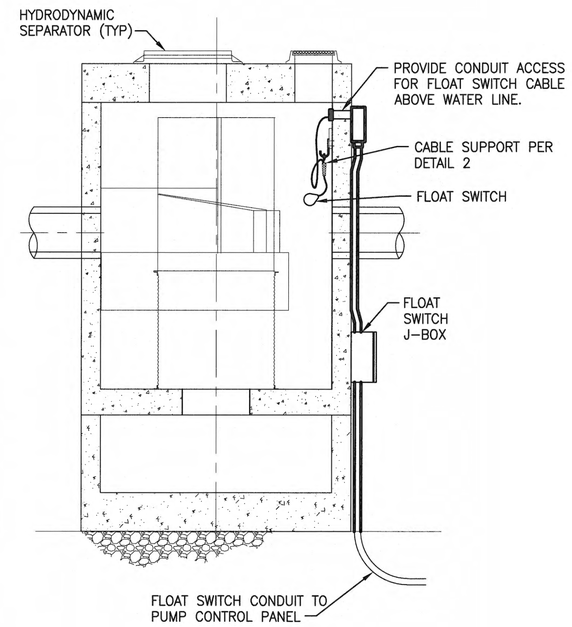

6 HYDRODYNAMIC SEPARATOR FLOAT SWITCH MOUNTING DETAIL

SCALE: NOT TO SCALE

Port of Tacoma
P.O. BOX 1837 TACOMA, WA 98401 253383-5841

Parametrix
ENGINEERING . PLANNING . ENVIRONMENTAL SCIENCES
650 WASHINGTON AVENUE, SUITE 390
BREMERTON, WA 98337
P 360.377.0014
WWW.PARAMETRIX.COM

MARK:	REVISION:	BY:	APPR:	DATE:

JENNIFER ELISE MURPHY, STATE OF WASHINGTON, 56887, REGISTERED PROFESSIONAL ENGINEER
APRIL 25, 2018

APPROVED: 4/26/18

AGS MAR 2018	CHECKED BY	DATE
JEM APR 2018	PROJ. ENGR	DATE
peterden Apr 25, 2018	PRINTED BY:	
TACOMA, WA 98401-1837	PORT ADDRESS:ONE SITCUM PLAZA	
AS NOTED	DRAWING SCALE:	

DIRECTOR ENG.

WEST SITCUM
STORMWATER TREATMENT
ELECTRICAL DETAILS - GENERAL

TOWNSHIP: 21N	RANGE: 3E	SECTIONS:33 & 34	
DAT-HRZ: WA83-S	VERT: MLLW		
PARCEL: SEE G02			

6583
E07
SH 44 OF 47

CONT/CONS:	070664
M. ID:	201024.01
PHASE:	BID SET

THIS DRAWING IS THE PROPERTY OF THE PORT OF TACOMA AND SHALL NOT BE USED ON OTHER WORK, DISCLOSED, COPIED, IN WHOLE OR IN PART, WITHOUT WRITTEN PERMISSION

PORT OF TACOMA FILE: U:\PSO\Projects\Clients\8001-NW Seaport Alliance\553-8001-001 West Sitcum\99Svcs\CADD\DWG\PS8001001E-07

BINDING EDGE

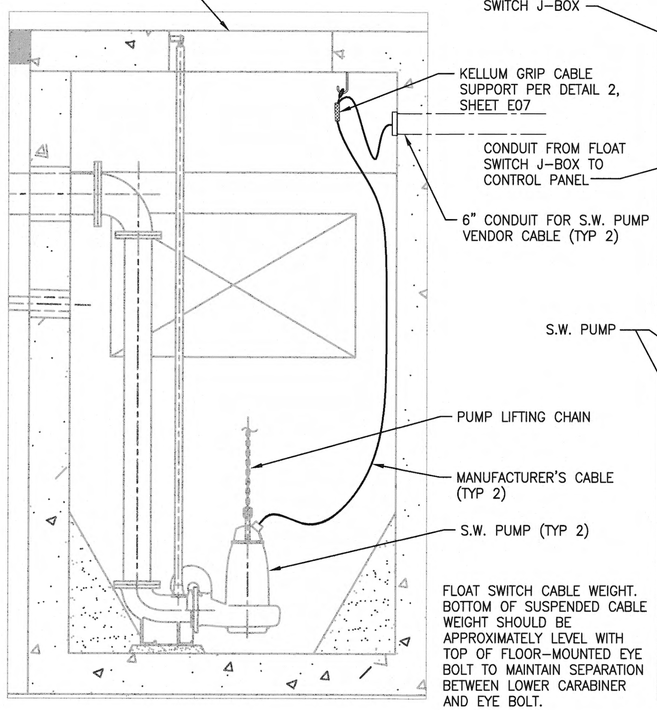

1 - PUMP CABLE INSTALLATION DETAIL (1)

SCALE: NOT TO SCALE

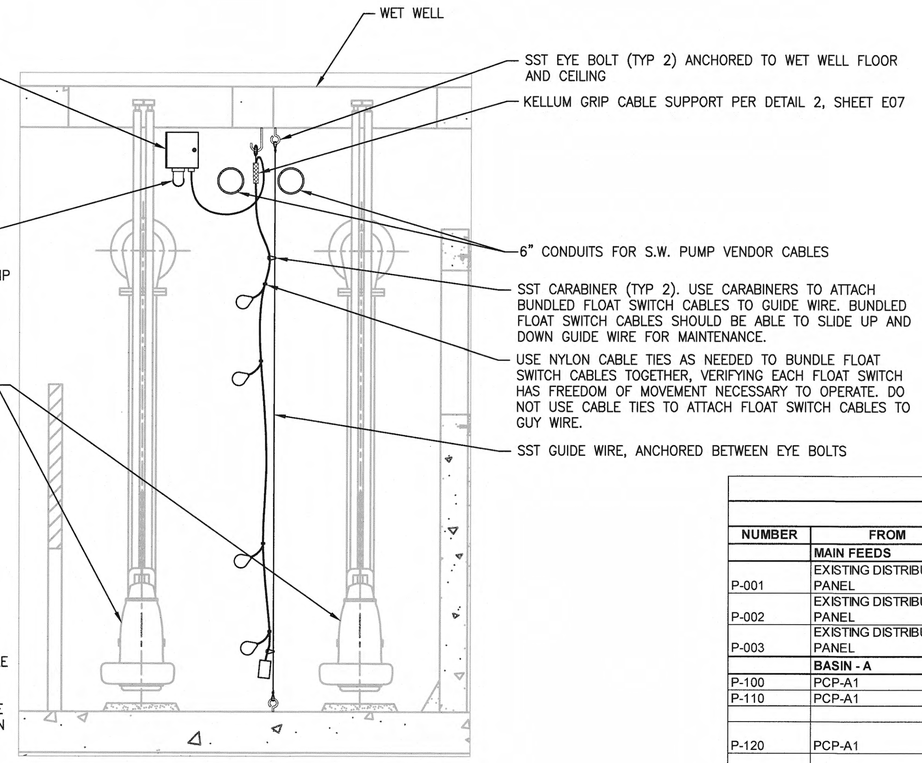

2 - FLOAT SWITCH INSTALLATION DETAIL (1)

SCALE: NOT TO SCALE

NOTES:

(1) DETAIL IS A TYPICAL ARRANGEMENT. USE THE BASIN ELECTRICAL SITE PLANS TO DETERMINE ACTUAL LOCATIONS OF ELECTRICAL EQUIPMENT.

2. MOUNT FLOAT SWITCH ASSEMBLY IN AN AREA OF LOW TURBULENCE NEAR WALL OR CORNER OF WET WELL.

CONDUIT AND WIRE SCHEDULE

NUMBER	FROM	TO	CONDUIT SIZE (")	CABLE SIZE & QUANTITY POWER	CONTROL	SIGNAL	COMMENTS
	MAIN FEEDS						
P-001	EXISTING DISTRIBUTION PANEL	PCP-A1	1-1/4"	3#3,1#8G			
P-002	EXISTING DISTRIBUTION PANEL	PCP-B1	1-1/4"	3#3,1#8G			
P-003	EXISTING DISTRIBUTION PANEL	PCP-C1	2"	3#1,1#6G			
	BASIN - A						
P-100	PCP-A1	S.W.PUMP 1 (P-A1)	6"	PUMP PLUG			VENDOR CABLE
P-110	PCP-A1	S.W.PUMP 2 (P-A2)	6"	PUMP PLUG			VENDOR CABLE
P-120	PCP-A1	HEAT TRACE CONTROLLERS	3/4"	2#12, 1#12G			
C-100	PCP-A1	J-BOX A1 (FOR LEVEL SWITCHES)	3/4"		8#14, 1#14G		
C-101	J-BOX-A1	LSLL-A1, LSL-A2, LSH-A3, LSHH-A4	3/4"		(4) MFR CABLE		VENDOR CABLE
C-102	PCP-A1	J-BOX A2	3/4"		2#14, 1#14G		
C-103	J-BOX-A2	LSH-A5	3/4"		(1) MFR CABLE		VENDOR CABLE
C-104	PCP-A1	J-BOX-A3	3/4"		2#14, 1#14G		
C-105	J-BOX-A3	LSH-A6	3/4"		(1) MFR CABLE		VENDOR CABLE
	BASIN - B						
P-200	PCP-B1	S.W.PUMP 1 (P-B1)	6"	PUMP PLUG			VENDOR CABLE
P-210	PCP-B1	S.W.PUMP 2 (P-B2)	6"	PUMP PLUG			VENDOR CABLE
P-220	PCP-B1	HEAT TRACE CONTROLLERS	3/4"	2#12, 1#12G			
P-230	PCP-B1	HEAT TRACE CONTROLLERS	3/4"	2#12, 1#12G			
C-200	PCP-B1	J-BOX-B1 (FOR LEVEL SWITCHES)	3/4"		8#14, 1#14G		
C-201	J-BOX-B1	LSLL-B1, LSL-B2, LSH-B3, LSHH-B4	3/4"		(4) MFR CABLE		VENDOR CABLE
C-202	PCP-B1	J-BOX B2	3/4"		2#14, 1#14G		
C-203	J-BOX-B2	LSH-B5	3/4"		(1) MFR CABLE		VENDOR CABLE
C-204	PCP-B1	J-BOX-B3	3/4"		2#14, 1#14G		
C-205	J-BOX-B3	LSH-B6	3/4"		(1) MFR CABLE		VENDOR CABLE
	BASIN - C						
P-300	PCP-C1	S.W.PUMP 1 (P-C1)	6"	PUMP PLUG			VENDOR CABLE
P-310	PCP-C1	S.W.PUMP 2 (P-C2)	6"	PUMP PLUG			VENDOR CABLE
P-320	PCP-C1	HEAT TRACE CONTROLLERS	3/4"	2#12, 1#12G			
P-330	PCP-C1	HEAT TRACE CONTROLLERS	3/4"	2#12, 1#12G			
P-340	PCP-C1	HEAT TRACE CONTROLLERS	3/4"	2#12, 1#12G			
C-300	PCP-C1	J-BOX-C1 (FOR LEVEL SWITCHES)	3/4"		8#14, 1#14G		
C-301	J-BOX-C1	LSLL-C1, LSL-C2, LSH-C3, LSHH-C4	3/4"		(4) MFR CABLE		VENDOR CABLE
C-302	PCP-C1	J-BOX-C2	3/4"		2#14, 1#14G		
C-303	J-BOX-C2	LSH-C5	3/4"		(1) MFR CABLE		VENDOR CABLE
C-304	PCP-C1	J-BOX-C3	3/4"		2#14, 1#14G		
C-305	J-BOX-C3	LSH-C6	3/4"		(1) MFR CABLE		VENDOR CABLE

Port of Tacoma
P.O. BOX 1837 TACOMA, WA 98401 (253)383-5841

Parametrix
ENGINEERING · PLANNING · ENVIRONMENTAL SCIENCES
650 WASHINGTON AVENUE, SUITE 390
BREMERTON, WA 98337
P 360.377.0014
WWW.PARAMETRIX.COM

MARK:	REVISION:	BY:	APPR:	DATE:

JEFF ELLSE MOORLY, STATE OF WASHINGTON, 56887, REGISTERED PROFESSIONAL ENGINEER
APRIL 25, 2018

AGS MAR 2018 CHECKED BY DATE
JEM APR 2018 PROJ. ENGR DATE
APPROVED: 4/26/18
DIRECTOR ENG. DATE
PRINTED BY: peterden Apr 25, 2018
PORT ADDRESS: ONE SITCUM PLAZA TACOMA, WA 98401-1837

WEST SITCUM STORMWATER TREATMENT
ELECTRICAL DETAILS, CONDUIT AND WIRE SCHEDULE

TOWNSHIP: 21N | RANGE: 3E | SECTIONS: 33 & 34
DAT-HRZ: WA83-S | VERT: MLLW
PARCEL: SEE G02 | DRAWING SCALE: AS NOTED

6583
E08
SH 45 OF 47
CONT/CONS: 070664
M. ID: 201024.01
PHASE: BID SET

THIS DRAWING IS THE PROPERTY OF THE PORT OF TACOMA AND SHALL NOT BE USED ON OTHER WORK, DISCLOSED, COPIED, IN WHOLE OR IN PART, WITHOUT WRITTEN PERMISSION

BINDING EDGE
PORT OF TACOMA FILE: U:\PSO\Projects\Clients\8001-NW Seaport Alliance\553-8001-001 West Sitcum\99Svcs\CADD\DWG\PS8001001E-08

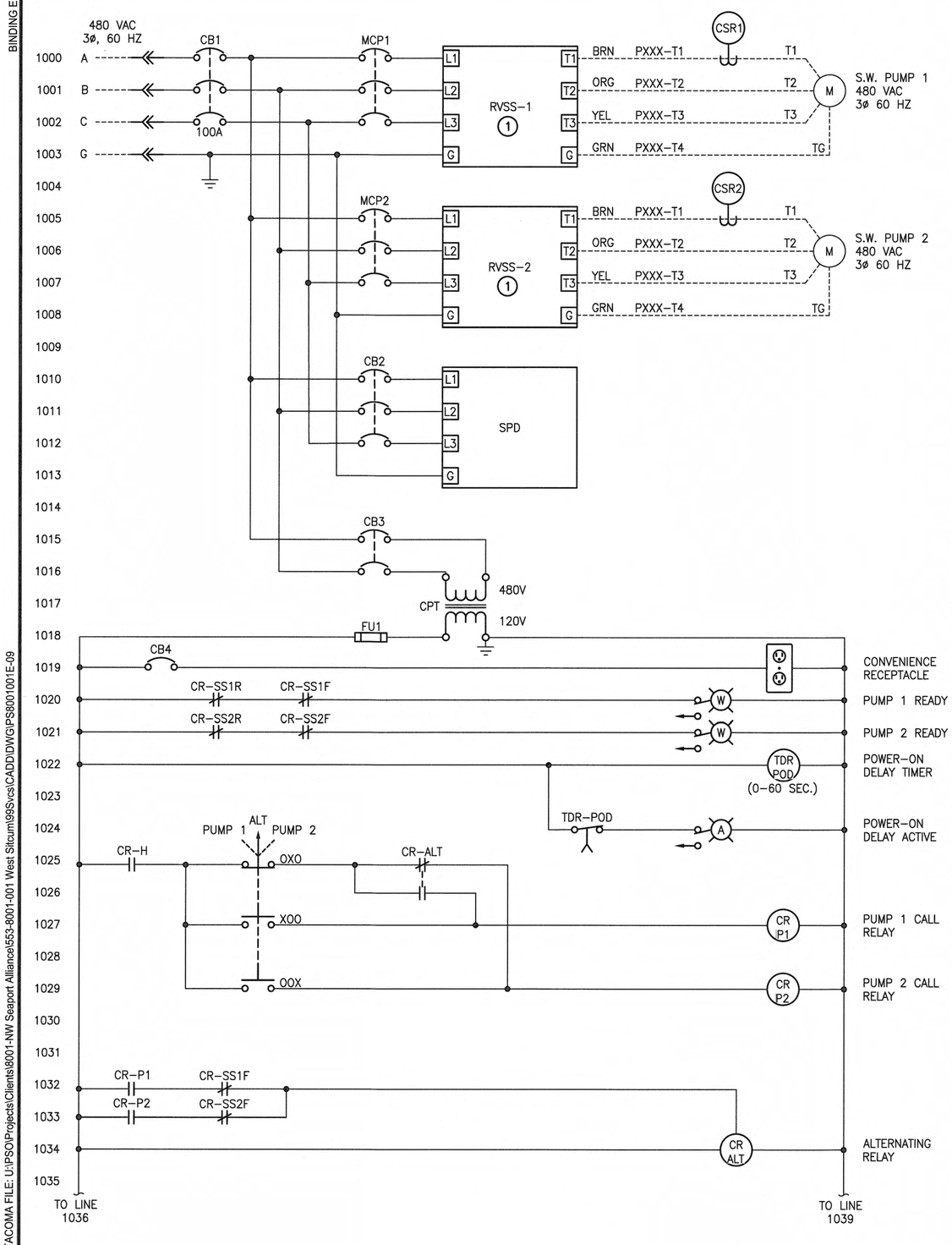

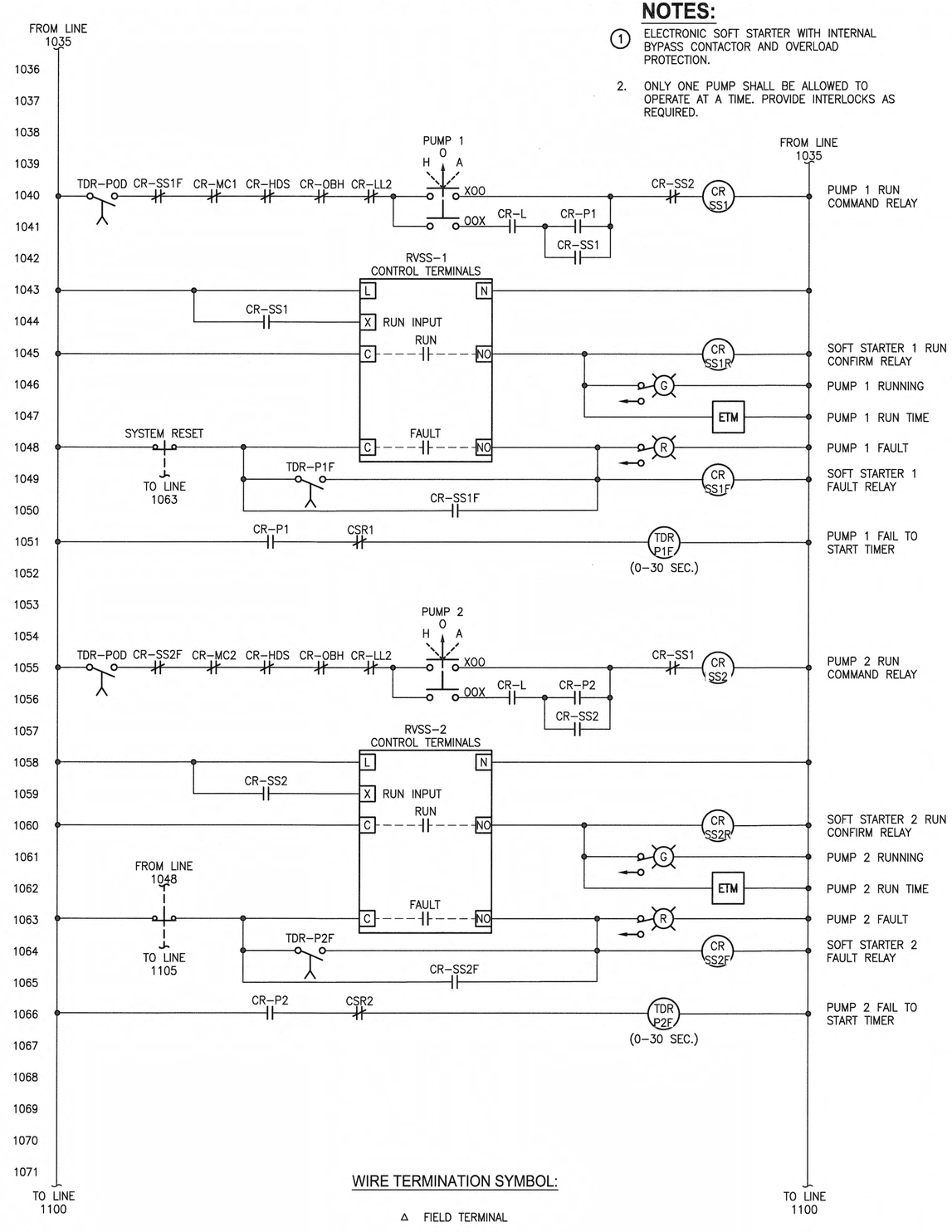

NOTES:

1. ELECTRONIC SOFT STARTER WITH INTERNAL BYPASS CONTACTOR AND OVERLOAD PROTECTION.
2. ONLY ONE PUMP SHALL BE ALLOWED TO OPERATE AT A TIME. PROVIDE INTERLOCKS AS REQUIRED.

WIRE TERMINATION SYMBOL:

△ FIELD TERMINAL

----- FIELD WIRING

Port of Tacoma
P.O. BOX 1837 TACOMA, WA 98401 (253)383-5841

Parametrix
ENGINEERING PLANNING ENVIRONMENTAL SCIENCES
660 WASHINGTON AVENUE, SUITE 390
BREMERTON, WA 98337
P 360.377.0014
WWW.PARAMETRIX.COM

MARK:	REVISION:	BY:	APPR:	DATE:

APRIL 25, 2018

APPROVED: 4/26/18

	AGS	MAR 2018
	CHECKED BY	DATE
	JEM	APR 2018
DIRECTOR ENG.	PROJ. ENGR	DATE
PRINTED BY: peterden Apr 25, 2018		
PORT ADDRESS: ONE SITCUM PLAZA TACOMA, WA 98401-1837		

WEST SITCUM
STORMWATER TREATMENT
ELEMENTARY DIAGRAMS

TOWNSHIP: 21N	RANGE: 3E	SECTIONS: 33 & 34	
DAT-HRZ: WA83-S	VERT: MLLW		
PARCEL: SEE G02	DRAWING SCALE: AS NOTED		

6583
E09
SH 46 OF 47

CONT/CONS: 070664	
M. ID: 201024.01	
PHASE: BID SET	

THIS DRAWING IS THE PROPERTY OF THE PORT OF TACOMA AND SHALL NOT BE USED ON OTHER WORK, DISCLOSED, COPIED, IN WHOLE OR IN PART, WITHOUT WRITTEN PERMISSION

BINDING EDGE
PORT OF TACOMA FILE: U:\PSO\Projects\Clients\8001-NW Seaport Alliance\553-8001-001 West Sitcum\99Svcs\CADD\DWG\PS8001001E-09

NOTES:

1. RELAY COMBINING MOISTURE AND OVERTEMP SENSORS. SEAL LEAKAGE, OVERTEMPERATURE, AND POWER AVAILABLE INDICATOR LIGHTS SHALL BE PROVIDED INTEGRAL TO UNIT. UNIT TO BE SUPPLIED LOOSE WITH PUMPS FOR INSTALLATION INTO CONTROL PANEL.
2. INTRINSICALLY SAFE RELAY.
3. PROVIDE CIRCUIT BREAKER FOR HEAT TRACE CIRCUITS WITH GROUND FAULT PROTECTION PER NEC REQUIREMENTS. MULTIPLE HEAT TRACE CONTROLLERS AND CIRCUITS MAY BE REQUIRED. SEE DRAWINGS E04, E06, AND E08.

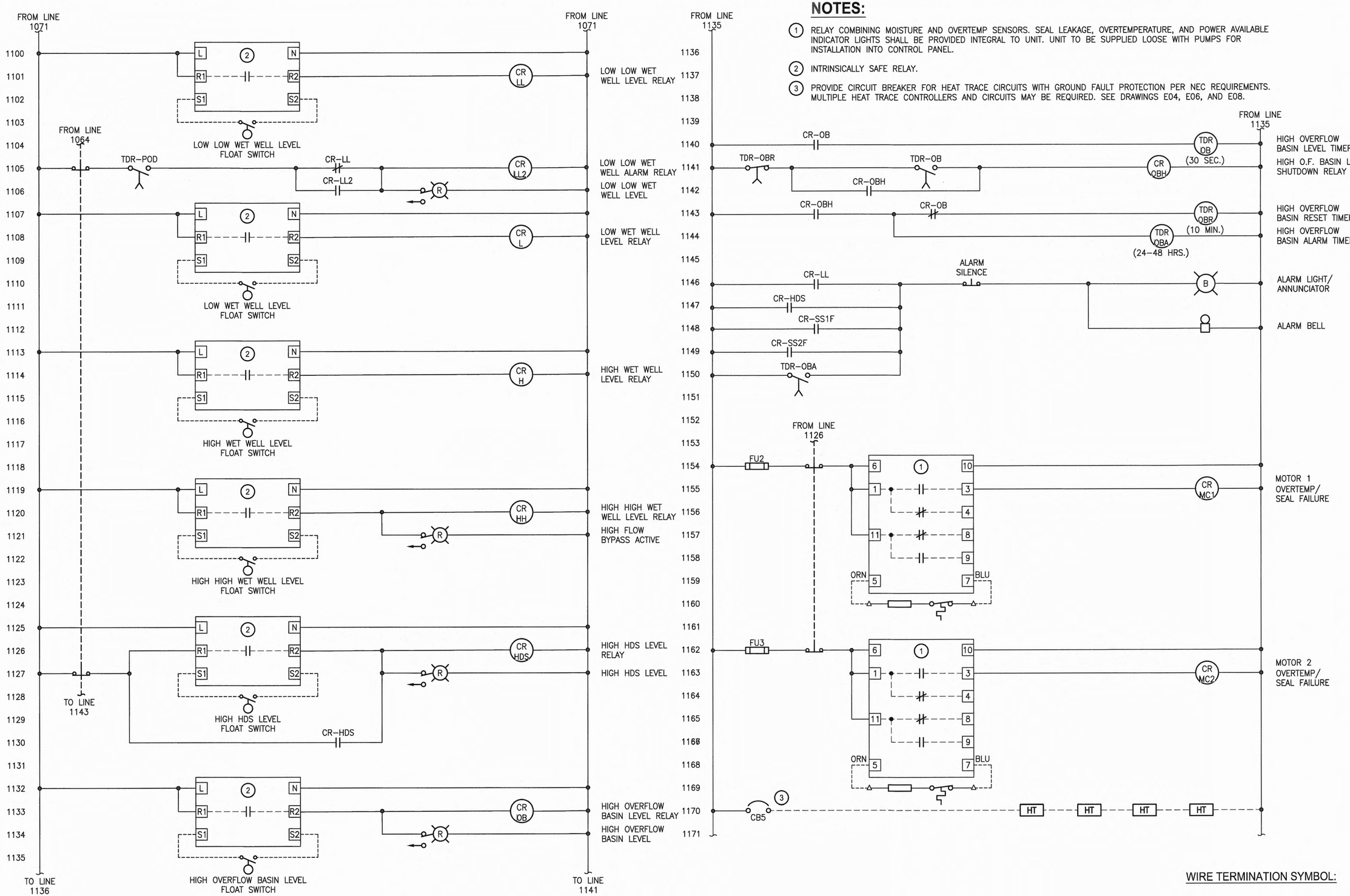

Port of Tacoma
P.O. BOX 1837 TACOMA, WA 98401 (253)383-5841

Parametrix
ENGINEERING · PLANNING · ENVIRONMENTAL SCIENCES
801 WASHINGTON AVENUE, SUITE 350
BREMERTON, WA 98337
P 360.377.0014
WWW.PARAMETRIX.COM

MARK:	REVISION:	BY:	APPR:	DATE:

APPROVED: 4/26/18
DIRECTOR ENG. DATE

CHECKED BY	DATE
PROJ. ENGR	DATE
PRINTED BY: peterden Apr 25, 2018	
PORT ADDRESS: ONE SITCUM PLAZA TACOMA, WA 98401-1837	

WEST SITCUM STORMWATER TREATMENT
ELEMENTARY DIAGRAMS

APRIL 25, 2018

6583
E10
SH 47 OF 47

CONT/CONS: 070664	TOWNSHIP: 21N	RANGE: 3E	SECTIONS: 33 & 34
M. ID: 201024.01	DAT-HRZ: WA83-S	VERT: MLLW	
PHASE: BID SET	PARCEL: SEE G02	DRAWING SCALE: AS NOTED	

THIS DRAWING IS THE PROPERTY OF THE PORT OF TACOMA AND SHALL NOT BE USED ON OTHER WORK, DISCLOSED, COPIED, IN WHOLE OR IN PART, WITHOUT WRITTEN PERMISSION

BINDING EDGE
PORT OF TACOMA FILE: U:\PSO\Projects\Clients\8001-NW Seaport Alliance\553-8001-001 West Sitcum\99Svcs\CADD\DWG\PS8001001E-10