Installation Guide

PCAM-CHMSL2-FD15

Third Brake Light Camera with Cargo and Side Blind Spot Views

For Ford F-150 (2015-2023) and Ford Super Duty Trucks (2017-2023)

ECHOMASTER PRO

PCAM-CHMSL2-FD15
Third Brake Light Camera

Introduction

Thank you for purchasing your EchoMaster Pro automotive camera.

EchoMaster cameras are designed to improve safety while driving by providing high quality images of surrounding areas and obstacles in the vicinity of the vehicle. They will also improve vehicle maneuvering capability by displaying blind spots not normally visible to the driver.

Please ensure you read and understand all aspects of this manual before installing or using your EchoMaster camera.

Key Features

- 1/3” CMOS Sensor
- Operates at 0.3 LUX
- Water/debris proof rating: IP67
- 3 Viewing Angles
  - Right 95°
  - Left 95°
  - Rear 90 °

PCAM-CHMSL2-FD15
Third Brake Light Camera

Box Contents

- Third Brake Light Camera and Bracket
- 17.5’ Extension Cable
- Camera Adjustment Tool
- Installation Guide
- Warranty Card

Illustrations are typical and may not match exact vehicle details.

ECHOMASTER PRO

PCAM-CHMSL2-FD15
Third Brake Light Camera

Installing the CHMSL Camera

Step 1
Remove the 4 screws that secure the third brake light.

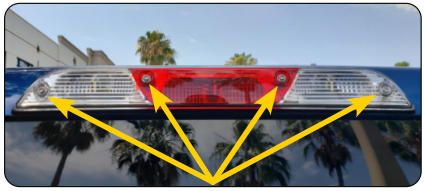

Step 2
a. Remove the third brake light from the vehicle and disconnect connector.

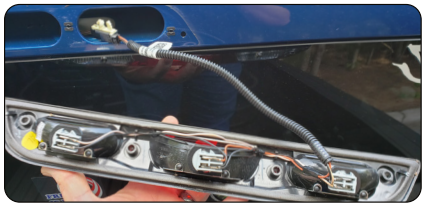

b. Place the third brake light onto the third brake light camera bracket and line up the screw holes.

c. Reconnect the third brake light to the factory connector.

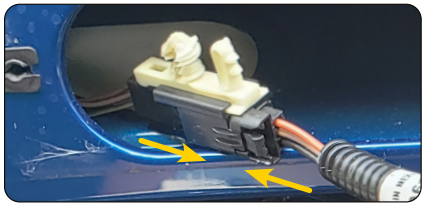

Step 3
Using a long zip tie or fish tape with the camera cable attached to it, feed the camera cable from the third brake light opening into the vehicle and towards the b / c pillar to the right or the left. (The weather seal may need to be removed to gain access to the fish tool used to run the cable.)

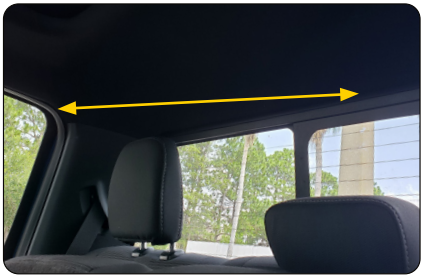

PCAM-CHMSL2-FD15
Third Brake Light Camera

Step 4
Connect the extension cable to the camera.

Step 5
Route the cable to the front of the vehicle and behind the radio, monitor, or mirror monitor.

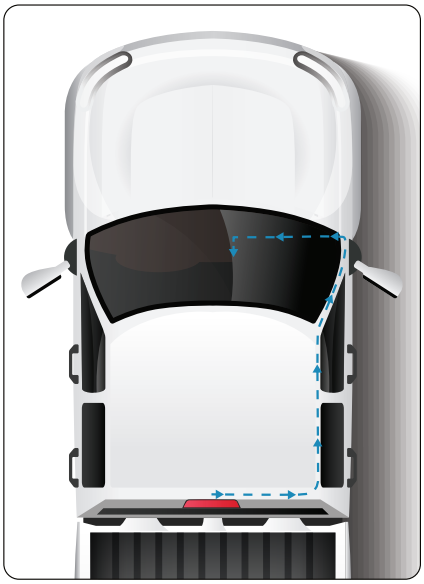

Step 6
Remount third brake light and camera assembly using the original screws.

ECHOMASTER PRO

PCAM-CHMSL2-FD15
Third Brake Light Camera

Step 7

Route the reverse and turn signal wires to their respective locations according to the table below

Turn Signal (Left)	Blue/Green	+	BCM in passenger kick, black 40 pin plug (J6), pin 39
Turn Signal (Right)	Yellow/Blue or Yellow/Violet	+	BCM in passenger kick, black 40 pin plug (J6), pin 38
Reverse Light	Green/Brown	+	BCM in passenger kick, black 36 pin plug (J3), pin 11

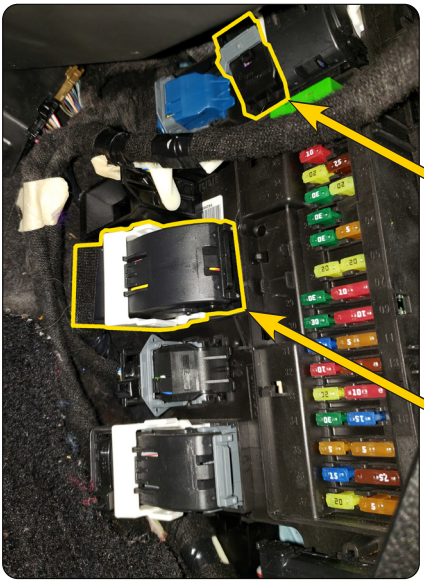

PCAM-CHMSL2-FD15
Third Brake Light Camera

Step 8
Connect the yellow video RCA to the rear camera input on the radio, monitor, or mirror monitor.

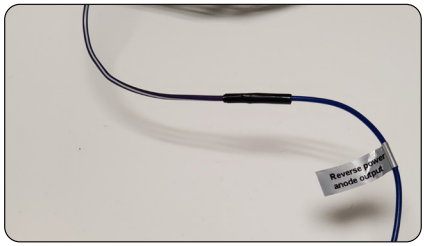

Step 9
Connect the Blue “Reverse power anode output” wire to the reverse trigger input on the radio, monitor, or mirror monitor.

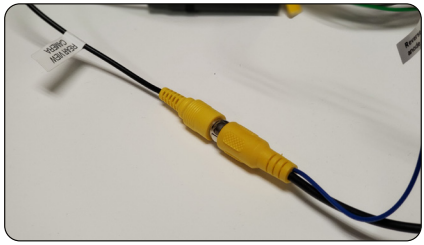

Step 10
With the ignition in the on position, shift the vehicle into reverse.

Step 11
Using the supplied tool, adjust the camera’s view to desired position. (Keep in mind that this adjustment will effect the blind spot view. It may be necessary to trigger the blind spot view to confirm desired position.)

ECHOMASTER PRO

PCAM-CHMSL2-FD15
Third Brake Light Camera

Using the CHMSL Camera

Rear Cargo View Camera

With the ignition in the on position, shift the vehicle into reverse. The image should appear on the screen.

Left Blind Spot Camera

With the ignition in the on position, apply the left turn signal. The image should appear on the screen.

Right Blind Spot Camera

With the ignition in the on position, apply the right turn signal. The image should appear on the screen.

PCAM-CHMSL2-FD15
Third Brake Light Camera

Views

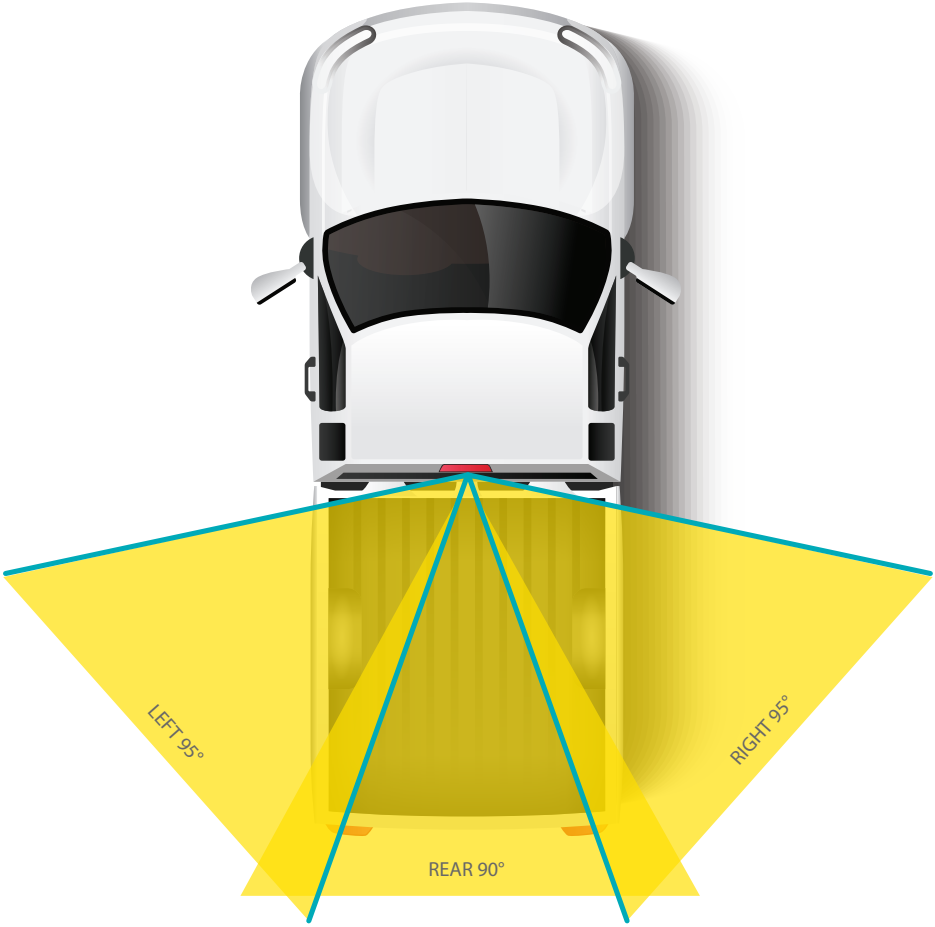

PCAM-CHMSL2-FD15
Third Brake Light Camera

Wiring Diagram

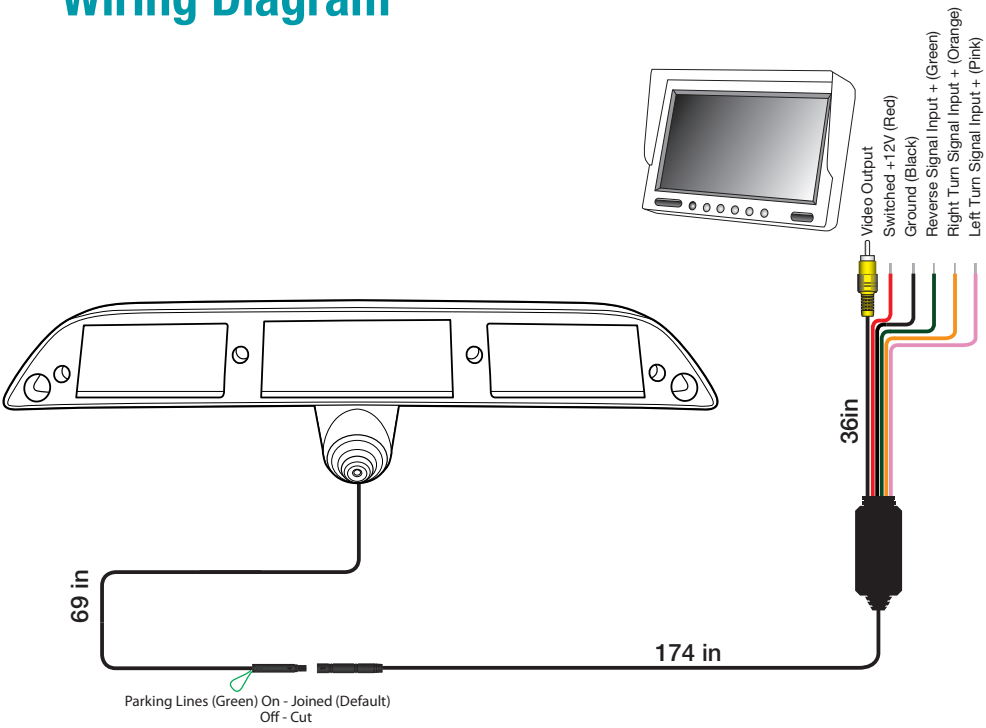

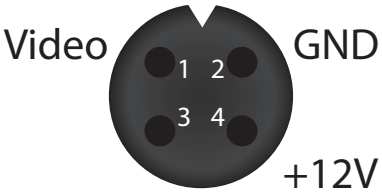

PCAM-CHMSL2-FD15
Third Brake Light Camera

Notes:

AGREEMENT: End user agrees to use this product in compliance with the instructions and terms of use above and with all State and Federal laws. EchoMaster provides instructions and safety warnings with respect to this product and disclaims all liability for any use not in conformity with those instructions or other misuse of its product. If you do not agree, please discontinue use immediately and contact EchoMaster. This product is intended for off-road use and passenger use only.

email - support@aampglobal.com
tel- 866-931-8021

Clearwater Florida 33760
EchoMaster is a Power Brand of AAMP Global
www.EchoMaster.com

PCAM-CHMSL2-FD15
REV. DC071123