AVerMedia D115S

Applies to NVIDIA® Jetson Orin™ NX/ Orin™ NANO Module

AVerMedia Technologies, Inc.
No. 135, Jian 1st Rd., Zhonghe Dist., New Taipei City 23585, Taiwan
Tel: 886-2-2226-3630
Fax: 886-2-3234-4842
Sales and Marketing: Contact
Technical Support: Professional User

Table of Contents

1.0 Introduction 9
1.1 Product Specifications 10
1.2 Option Accessory 12

2.0 Product Overview 13
2.1 Block Diagram 13
2.2 Front View and Back View of Carrier board 14
2.3 Front View and Back View of BOX PC.....15
2.4 Connector Summary.....18

3.0 Feature Description 20
3.1 Jetson module Connector 20
3.2 External RTC Battery wafer.....20
3.3 ATX 4pin (Molex Mini-Fit compatible).....21
3.4 OD 5.5/2.5 DC Jack with Lock 21
3.5 HDMI OUTPUT 22
3.6 M.2 E-Key 2230.....22
3.7 M.2 M-Key 2280.....22
3.8 MIPI CSI-2 DPHY Lanes.....23
3.9 USB 3.2 Dual Port Type A Connector 24
3.10 Gigabit Ethernet Connector w/LEDs 25
3.11 USB type C connector.....26
3.12 20-pin Expansion Terminal Block 26
3.13 Fan connector.....27
3.14 PSE Board Connector (for optional PSE board).....28
3.15 Expansion 5G Board Connector (for optional 5G Daughter Board).....29
3.16 OOB Board Connector #1 (for optional OOB board).....31
3.17 OOB Board Connector #2 (for optional OOB board).....32
3.18 Expansion connector for external power button 33
3.19 Dip Switch button 33
3.20 Power Control Button.....34
3.21 Force Recovery Button 34

4.0 Installation.....36
4.1 BSP Setup Instructions.....36
4.2 Let the JETSON Orin NX/NANO initiate recovery mode 36
4.3 Using the commands below in the Linux PC to start re-flashing BSP 36

5.0 Software.....37
5.1 Force Recovery Mode 42
5.2 OOB Software Settings.....43

5.3 Power Consumption 43

6.0 Dimension Drawings.....44
6.1Dimension Drawings of carrier board.....44
6.2 Dimension Drawing of D115S BOX PC 46
6.3 Dimension Drawing of PSE Board 48

7.0 Accessory Drawings.....49
7.1 Fan Module/Adapter/ Power Cord.....49

8.0 Accessory Assembly SOP.....54
8.1 PSE board.....54

Preface

Disclaimer

The information contained in this user manual, including but not limited to any product specification is subject to change without notice. AVerMedia assumes no liability for any damages incurred directly or indirectly from any technical or typographical errors or omissions contained herein or for discrepancies between the product and the user manual.

Technical Support

If you experience the difficulty after reading this manual and/or using the product, please contact the reseller from which you purchased the product. In most cases, the reseller can help you with the product installation and the difficulty you encountered.

In case the reseller is not able to resolve your problem, our highly capable global technical support team can certainly assist you. Our technical support section is available 24 hours a day and 7 days a week through our website, with the click here. For more contact information, you may find it in the section of AVerMedia Global Offices.

Contact Enquiry

For more information of our products, pricing, and order placement, please fill in our inquiry form here, we will contact you within 24 hours.

Download User Manual

Please click the link here to download the file of this user manual from AVerMedia website.

Revision History

Revision	Date	Updates
V0.1	July 04, 2025	1st Released
V0.2	July 28, 2025	Update 3.19
V0.3	Sep. 15, 2025	Modify Product warranty

AVerMedia Global Offices

https://www.avermedia.com/professional/contact-us

Headquarters

Taiwan Office
No. 135, Jian 1st Rd., Zhonghe Dist., New Taipei City 23585,Taiwan
Tel: +886-2-2226-3630
Fax: +886-2-3234-4842
Sales & Marketing: Contact
Technical Support: Home users / Professional users

The Americas

USA Office
754 Charcot Avenue, San Jose, CA 95131
Sales & Marketing: Contact
Technical Support: Home users / Professional users

Brazil Office
Sales & Marketing: Contact
Technical Support: Home users / Professional users

Latin America Office
Sales & Marketing: Contact
Technical Support: Home users / Professional users

Europe

Head Office EU
AVT Solutions GmbH
Hanauer Landstrasse 291 B 60314 Frankfurt Hessen
Germany
Technical Support: Home users / Professional users

Russia Office
Sales & Marketing: Contact
Technical Support: Home users / Professional users
Professional Solutions Support Tel:
+7 (925) 834-0310

Spain Office
AVerMedia Information (Spain) S.L.
Ronda de Poniente no. 16 Planta Baja, Puerta K
28760 Tres cantos, Madrid. Spain
Spain:
Sales & Marketing: Contact
Technical Support: Home users / Professional users

Asia-Pacific

China Office
Room 1510, No.488, Hitech Plaza, South Wuning Rd., Jingan District, Shanghai, China
Tel: +86-021-5298 7985
Fax: +86-021-5298 7981
Sales & Marketing: Contact
Technical Support: Home users / Professional users

India Office
Sales & Marketing: Contact
Technical Support: Home users / Professional users

Japan Office
10F TOWA akihabara Bldg.1-8 Akihabara, Taito-ku, Tokyo, 110-0006 Japan
Sales & Marketing: Contact
Technical Support: Home users / Professional users

Thailand Office
Sales & Marketing: Contact
Technical Support: Home users / Professional users

Korea Office
Sales & Marketing: Contact
Technical Support: Home users / Professional users

Vietnam Office
5F, No. 596 Nguyen Dinh Chieu St., Ward 3, District 3, HCM City, Vietnam
Tel: +84-28-22 539 211
Fax: +84-28-22 539 210
Sales & Marketing: Contact
Technical Support: Home users / Professional users

Product Warranty

Please refer to Support | Warranty And Rma Services | AVerMedia

Copyright Notice

The information contained in this document is subject to change without notice. AVerMedia shall not be liable for errors contained herein or for incidental consequential damages in connection with the furnishing, performance, or use of this material. This document contains proprietary information that is protected by copyright. All rights are reserved. No part of this document may be photocopied, reproduced, or translated to another language without the prior written consent by AVerMedia.

Trademark Acknowledgement

AVerMedia acknowledges all the trademarks, registered trademarks, and/or copyrights referred to in this document as the property of their respective owners. Not listing all possible trademarks or copyright acknowledgments does not constitute the lack of acknowledgment to the rightful owners of the trademarks and copyrights mentioned in this document.

ESD Warning

Electronic components and circuits are sensitive to Electrostatic Discharge (ESD). When handling any circuit board assemblies including AVerMedia AVerMedia products, it is highly recommended that ESD safety precautions can be observed. ESD safe best practices can include, but are not limited to the following ones.

1. Leave the circuit board in the antistatic package until it is ready to be installed.
2. Use a grounded wrist strap when handling the circuit board. At a minimum, you need to touch a grounded metal object to dissipate any static charge, which may be present on you.
3. Avoid handling the circuit board in the carpeted areas.
4. Handle the board by the edges and avoid the contact with the components.
5. Only handle the circuit boards in ESD safe areas, which may include ESD floor and/or table mats, wrist strap stations, and ESD safe lab coats.

Safety Precaution:

1. All cautions and warnings on the device should be noted.
2. For safety consideration, do NOT open the device if not a qualified service stuff.
3. Place the device on a solid surface during installation to prevent falls.
4. Keep the device away from humidity.
5. Do NOT leave this device in an un-controlled environment with temperatures beyond the device's permitted storage temperature to avoid damage.
6. All adaptors and cables supplied by AVerMedia are verified. Do NOT use any others not supplied by AVerMedia to avoid any malfunction or fires.
7. Make sure the power source matches the power rating of the device.
8. Place the power cord where people cannot step on it. Do not put anything on the power cord.
9. Always completely disconnect the power while the device is not usage or idle for a long time.
10. Disconnect the device from any AC supply before cleaning. While cleaning, use a damp cloth instead of liquid or spray detergents.

11. Make sure the device is installed near a power outlet and easy for accessible.
12. Do not cover the openings on the device to ensure optimal heat dissipation.
13. Watch out the heatsink or heat spreader of the device when the system is running.
14. Never pour any liquid into the openings. This could cause fire or electric shock.
15. The static electricity should be noted while installing any internal components. Consider to use a grounding wrist strap and put all electronic parts in static-shielded containers.

If the following situations occur, please contact our service personnel:

(1) The device is dropped or damaged

(2) Damaged power cord or plug

(3) Exposure to moisture

(4) Liquid intrusion into the device

(5) Any obvious signs of damage displayed on the device

(6) Device is not working as expected or in a manner as described in this manual

1.0 Introduction

AVerMedia D115S/D115SOXP/D115SONP is a fully featured carrier board/box PC designed for NVIDIA® Jetson Orin NX/Orin Nano modules. AVerMedia provides access to a wide range of latest interfaces on NVIDIA® Jetson Orin NX/Orin Nano modules.

D115S/D115SOXP/D115SONP provide HDMI video output, two USB 3.2 ports, two GbE RJ-45 por ts(Option PoE x1), 20-pin expansion header, and one USB 2.0 type C port for recovery.

Operating with NVIDIA® Jetson Orin NX/Orin Nano modules and the rich I/O functions, AVerMedia D115S/D115SOXP/D115SONP is the perfect choice in building a compact, high performance AI edge computing platform for the intelligent video analytics applications.

1.1 Product Specifications

Model	D115S	
Type	Carrier board	
NVIDIA GPU SoC Module Compatibility	NVIDIA® Jetson Orin NX module NVIDIA® Jetson Orin NANO module	
Networking	2x GbE RJ-45 (Option PoE x1) 1xM.2. key E 2230 for Wi-Fi	
Display Output	1x HDMI 4Kp60 for Orin NX 1x HDMI 4Kp30 for Orin Nano	
Temperature	Operating temperature: -40°C~85°C Storage temperature -40°C~85°C Relative humidity 40°C @ 95%, Non-Condensing	
MIPI Camera Inputs	2x 4 lane MIPI CSI-2, 22 pin FPC 0.5mm Pitch Connector	
USB	2x USB 3.2 Type-A 1x USB 2.0 type C for recovery	
Storage	1x M.2 key M 2280 for SSD	
Misc	20 pins: 2x I2C, 2x UART, 4x GPIOs, 1xCAN TPM2.0	
Expansion	802.3AF PSE board(optional) OOB board(optional) 5G Daughter Board(optional)	
Power requirement	Voltage	DC 12~24V
	Current	DC IN Jack on board: 10A Max
		ATX 4pin: 10A Max
Power Cord	US/JP/EU/UK/TW/AU/CN power cord (optional)	
Fan Module	Heat sink with fan (optional)	
Buttons	Power and Recovery	
RTC Battery	Support RTC battery and Battery Life Monitoring by MCU	
Dimensions	W:120mm x L:90mm; Weight: 125 g	
Certifications	CE, FCC, VCCI, KC (TBD)	

Model	D115SOXP/D115SONP	
Type	BOX PC	
NVIDIA GPU SoC Module Compatibility	NVIDIA® Jetson Orin NX module NVIDIA® Jetson Orin NANO module	
Networking	2x GbE RJ-45 (Option PoE x1) 1xM.2. key E 2230 for Wi-Fi	
Display Output	1x HDMI 4Kp60 for Orin NX 1x HDMI 4Kp30 for Orin Nano	
Temperature	Operating temperature: -25°C~40°C (Orin NX super mode) Operating temperature: -25°C~60°C (Orin NX normal/Nano normal/Nano super mode) Storage temperature -40°C~85°C Relative humidity 40°C @ 95%, Non-Condensing	
MIPI Camera Inputs	2x 4 lane MIPI CSI-2, 22 pin FPC 0.5mm Pitch Connector	
USB	2x USB 3.2 Type-A 1x USB 2.0 type C for recovery	
Storage	1x M.2 key M 2280 for SSD	
Misc	20 pins: 2x I2C, 2x UART, 4x GPIOs, 1xCAN TPM2.0	
Expansion	802.3AF PSE board(optional) OOB board(optional) 5G Daughter Board(optional)	
Power requirement	Voltage	DC 12~24V
	Current	DC IN Jack on board: 10A Max
		ATX 4pin: 10A Max
Power adapter/Power Cord	19V/4.73A adapter and US/JP/EU/UK/TW/AU/CN power cord (optional)	
Fan Module	Fanless solution	
Buttons	Power and Recovery	
RTC Battery	Support RTC battery and Battery Life Monitoring by MCU	
Dimensions	W:126mm x L:96mm x H:73.9mm (W:162mm with mounting ears); Weight: 1kg (TBD) (Normal mode) W:190mm x L:175mm x H:80mm (W:226mm with mounting ears)(by request) Weight: 4 Kg (TBD) (Super mode)	
Certifications	CE, FCC, VCCI, KC (TBD)	

1.2 Option Accessory

Item	D115S
NVIDIA® Jetson	NVIDIA® Jetson Orin NX/Orin Nano
Power Cord	EU/JP/TW/US/CN/UK/AU
MIPI Camera (internal I/O)	● For 22 pin MIPI connector 1. raspberry pi imx219 &imx477 (V2) 2. Manufacturer: APPRO.PHO • B-04: IMX179(8M)MIPI, 1080P(30fps) • C-04: IMX290(2M)MIPI, 1080P(30fps) • C-05: IMX290(2M)+ISP(YUV), 1080P(30fps)

2.0 Product Overview

2.1 Block Diagram

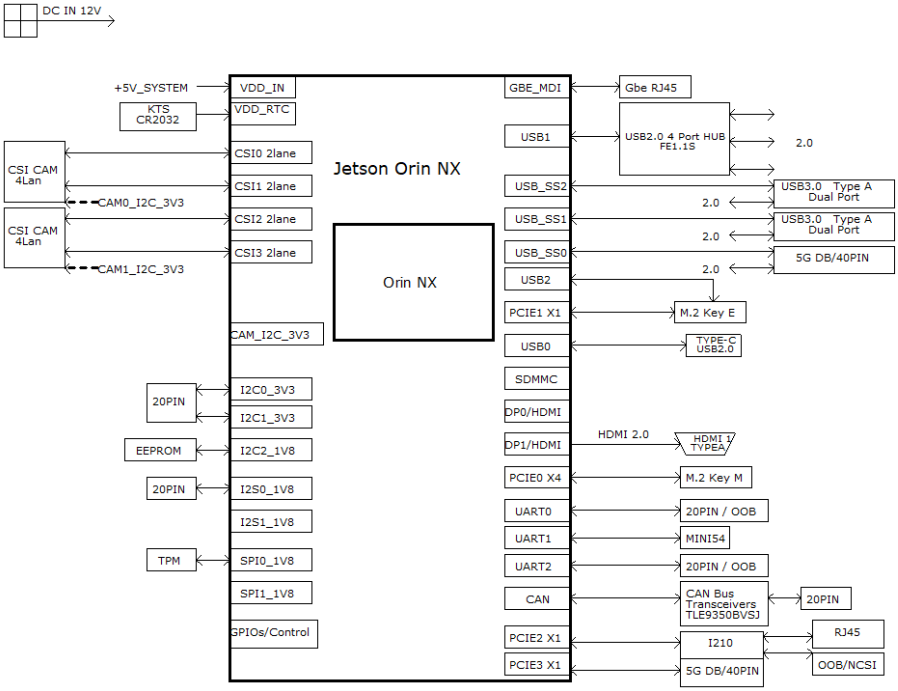

2.2 Front View and Back View of Carrier board

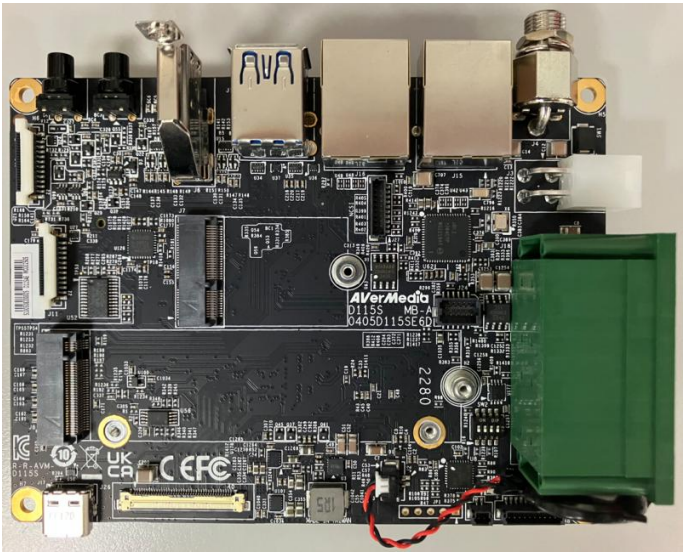

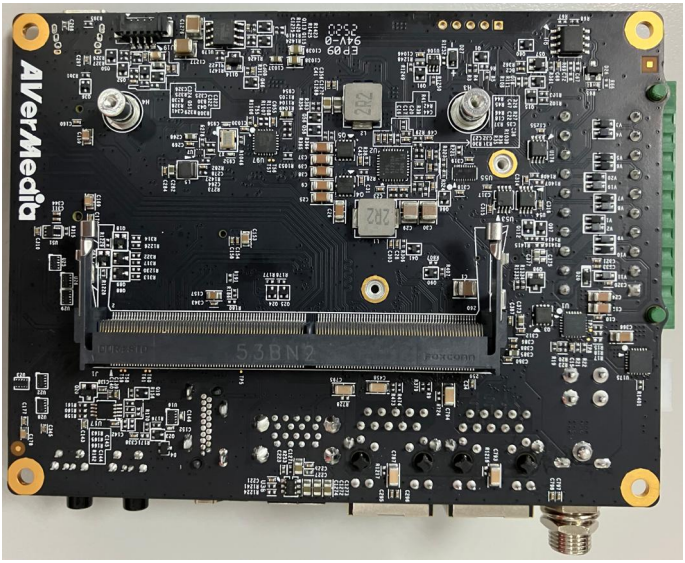

2.3 Front View and Back View of BOX PC

Left view

Right view

Top view

Front view

Rear view

Bottom view

2.4 Connector Summary

Top View Interface

J1	SO-DIMM 260-pin 90° SMD Socket(H-9.2mm)
J19	Fan Wafer

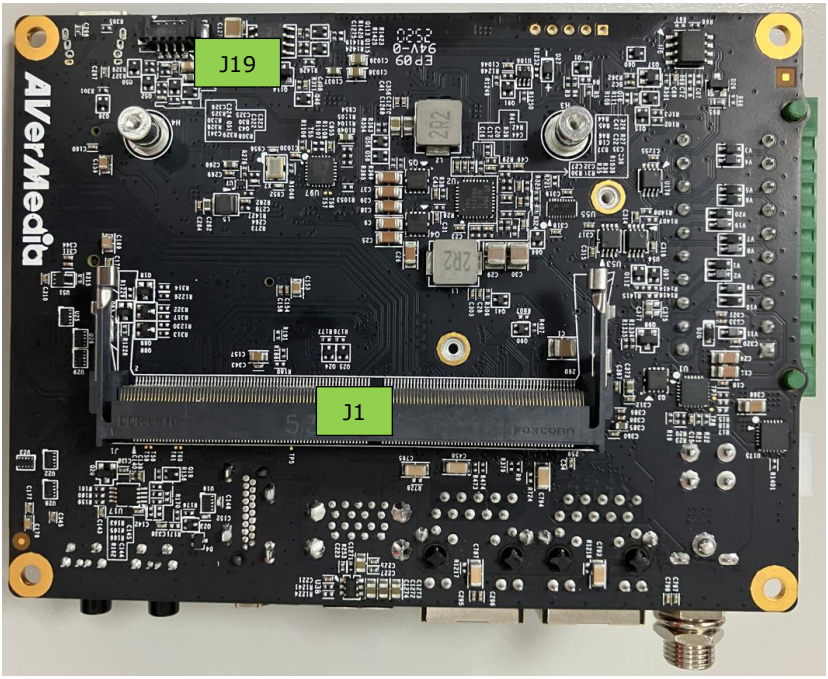

Bottom View Interface

J2	External RTC Battery wafer
J3	ATX 4pin (Molex Mini-Fit compatible)
J4	OD 5.5/2.5 DC Jack with Lock
J6	HDMI output Type-A Vertical Side Connector (Female)
J7	M.2 E-Key Socket
J8	M.2 M-Key Socket
J10	FPC connector for 4-lane MIPI CSI-2
J11	FPC connector for 4-lane MIPI CSI-2
J13	USB 3.2 Dual Port Type A Connector
J15	Gigabit Ethernet Connector w/LEDs (OOB optional)
J16	Gigabit Ethernet Connector w/LEDs (PSE optional)
J17	USB type C connector
J18	20-pin Expansion Terminal Block
J24	PSE Board Connector (Maximum 15W)
J26	0.5mm pitch I-PEX connector for optional 5G Board
J27	OOB Board Connector #1(OOB with NC-SI)
J28	OOB Board Connector #2(OOB for basic function)
J29	Expansion connector for external power button
SW2	DIP switch
SW3	Power Button w/LEDs
SW4	Recovery Button w/LEDs

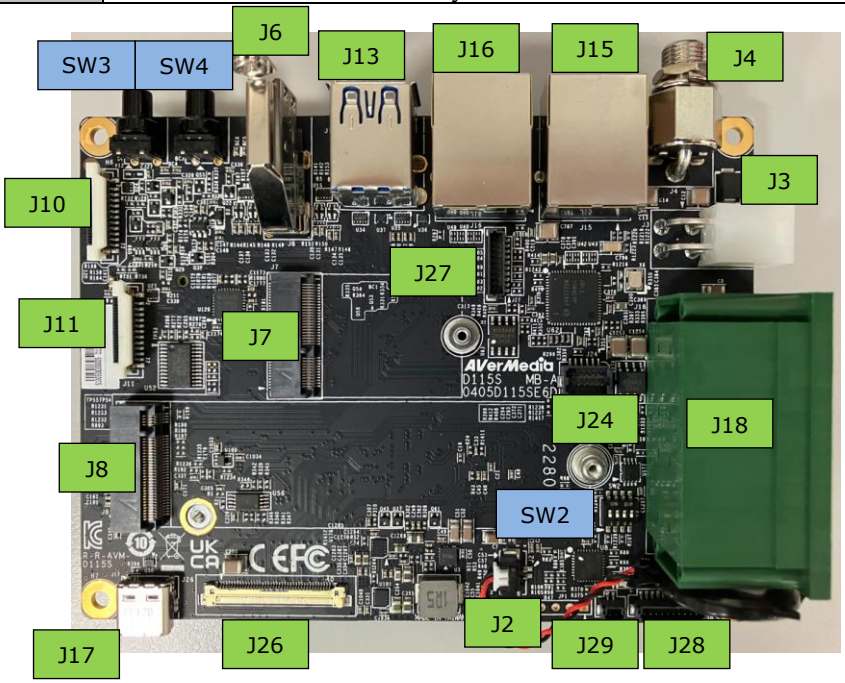

3.0 Feature Description

3.1 Jetson module Connector

Function	Provide connection with NVIDIA® Jetson Orin™ NX module	
Location	J1	
Description	SOCKET_DDR4 SO-DIMM_260PIN_90°	
Manufacturer Part number	Foxconn ASAA826-EASB0-7H	
Mating Connector	NVIDIA® Jetson Orin NX/Orin Nano	
Pinout	Please refer to NVIDIA Jetson System-on-Module datasheet for pinout details.	
Remarks	https://developer.nvidia.com/embedded/downloads	

3.2 External RTC Battery wafer

Function	RTC battery for module	
Location	J2	
Description	WAFER_1*2PIN_1.25 ㎜_90°	
Manufacturer Part number	ACES 50271-00201-001	
Mating Connector	ACES 50276-002H0H0-001 Molex 51021-8602	
Pinout		
Remarks	RTC Battery: KTS, CR2032 3V	

PIN#	Description	Module Pin#	Type/ Dir
1	GND	-	Ground
2	RTC_BAT	235	Power, 3V

3.3 ATX 4pin (Molex Mini-Fit compatible)

Function	DC Power input	 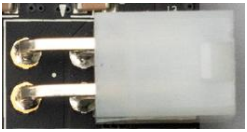
Location	J3	
Description	WAFER_2*2PIN_4.2 ㎜_90°_DIP	
Manufacture r Part number	JOINT C4255WR-2X02PN2NT1N00B	
Mating Connector	Follow ATX 4pin plug or molex mini fit plug	
Pinout	PIN# / Description 1 / GND 2 / GND 3 / 9-24V Power 4 / 9-24V Power	
Remarks	It can be changed to the 180° type for internal use, based on the customer's requirements.	

3.4 OD 5.5/2.5 DC Jack with Lock

Function	DC Power input with lock	
Location	J4	
Description	JACK_DC POWER_D2.5 ㎜_90°_DIP	
Manufacturer Part number	JKCR DCD-020-105B	
Mating Connector	Any OD 2.5mm power plug	
Pinout	N/A	
Remarks	NA	

3.5 HDMI OUTPUT

Function	HDMI output connector	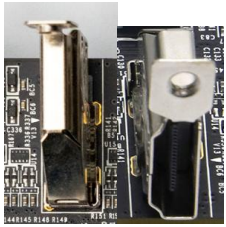
Location	J6	
Description	HDMI Type-A female connector	
Manufacturer Part number	Compupack. ACNHM210021-001	
Mating Connector	Any HDMI standard Type-A interface cable or device.	
Pinout	Please refer to HDMI standard.	
Remarks	None	

3.6 M.2 E-Key 2230

Function	M.2 E key	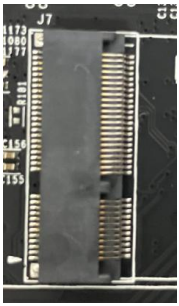
Location	J7	
Type Description	SOCKET_M.2-KEY E_75PIN_90°_SMD	
Manufacturer Part number	ACES 51750-0750P-005_ P0.5 ㎜-H3.05 ㎜	
Mating Connector	Any M.2 E key 2230 card standard interface device.	
Pinout	Please refer to M.2 E key card standard for the pinout details.	
Remarks	PCIe related@PCIe1(PCIe C1@0x14100000) & USB signal supported only Support PCIe Gen4 x1 & USB 2.0 for Orin NX Support PCIe Gen3 x1 & USB 2.0 for Orin Nano	

3.7 M.2 M-Key 2280

Function	M.2 M key	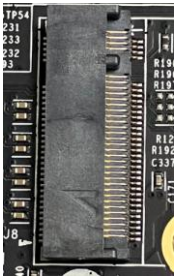
Location	J8	
Description	SOCKET_M.2-KEY_M_75PIN_90°_SMD	
Manufacturer Part number	ACES 51757-0750C-012_ P0.5 ㎜-H5.5 ㎜	
Mating Connector	Any M.2 M key 2280 card standard interface device.	
Pinout	Please refer to M.2 M key card standard for the pinout details.	

Remarks	PCIe related signal supported only @PCIe0(PCIe C4@0x14160000) Support PCIe Gen4 x4 for Orin NX Support PCIe Gen3 x4 for Orin Nano

3.8 MIPI CSI-2 DPHY Lanes

Function	MIPI camera module connector
Location	J10 , J11
Description	ACES ZIF FPC Conn._22PIN_0.5 ㎜_90°
Manufacturer Part number	ACES 50554-02241-003
Mating Connector	FPC Cable(22Pin)

Pinout

J10

PIN#	Description	Module Pin#	Type/ Dir
1	+3V3_SYSTEM	-	Power, 3.3V
2	I2C_CAM0_SDA	215	Bidir, 3.3V
3	I2C_CAM0_SCL	213	Output, 3.3V
4	GND	-	Ground
5	CAM0_MCLK	116	Output, 1.8V
6	CAM0_PWDN_LS	114	Output, 3.3V
7	GND	-	Ground
8	CSI1_D1_P	17	Input, MIPI
9	CSI1_D1_N	15	Input, MIPI
10	GND	-	Ground
11	CSI1_D0_P	5	Input, MIPI
12	CSI1_D0_N	3	Input, MIPI
13	GND	-	Ground
14	CSI0_CLK_P	12	Input, MIPI
15	CSI0_CLK_N	10	Input, MIPI
16	GND	-	Ground
17	CSI0_D1_P	18	Input, MIPI
18	CSI0_D1_N	16	Input, MIPI
19	GND	-	Ground
20	CSI0_D0_P	6	Input, MIPI
21	CSI0_D0_N	4	Input, MIPI

	22	GND	-	Ground

J11

PIN#	Description	Module Pin#	Type/ Dir
1	+3V3_SYSTEM	-	Power, 3.3V
2	I2C_CAM1_SDA	215	Bidir, 3.3V
3	I2C_CAM1_SCL	213	Output, 3.3V
4	GND	-	Ground
5	CAM1_MCLK	122	Output, 1.8V
6	CAM1_PWDN_LS	120	Output, 3.3V
7	GND	-	Ground
8	CSI3_D1_P	35	Input, MIPI
9	CSI3_D1_N	33	Input, MIPI
10	GND	-	Ground
11	CSI3_D0_P	23	Input, MIPI
12	CSI3_D0_N	21	Input, MIPI
13	GND	-	Ground
14	CSI2_CLK_P	30	Input, MIPI
15	CSI2_CLK_N	28	Input, MIPI
16	GND	-	Ground
17	CSI2_D1_P	36	Input, MIPI
18	CSI2_D1_N	34	Input, MIPI
19	GND	-	Ground
20	CSI2_D0_P	24	Input, MIPI
21	CSI2_D0_N	22	Input, MIPI
22	GND	-	Ground

Remarks	I2C_CAM0 & I2C_CAM1 connect to an I2C mux controlled by CAM_I2C of module

3.9 USB 3.2 Dual Port Type A Connector

Function	USB 3.2 Dual Port Type A Connector	
Location	J13	
Description	Dual-port USB 3.2 Type-A female connector	
Manufacturer Part number	Champway CU3B-AFR15U-096H	
Mating Connector	Any Standard Type-A interface cable or device.	
Pinout	Please refer to USB 3.2 standard.	
Remarks	Dual port within same connector(J13) share currents up to 2A Each port of J13 has full 10Gpbs bandwidth available.	

3.10 Gigabit Ethernet Connector w/LEDs

Function	1Gb single-port Ethernet connector, used to connect to the host system.
Location	J15, J16
Description	RJ45 with integrated magnetics (1G-LEFT(G)+RIGHT(Y)-DOWN)
Manufacturer Part number	Contact Technology MJ45-111QC4A-GY-S307
Mating Connector	Any standard 1Gb Ethernet mating connector can be applicable.
Pinout	Comply with Ethernet standards.

LED indicator

J15

Activity LED (Yellow)		Link/Speed LED (Green)	
Status	Description	Status	Description
Yellow Blinking	Data transmission or receiving is occurring	Solid Green	1000M
Off	No data transmission or receiving is occurring	Off	100M

J16

Activity LED (Yellow)		Link/Speed LED (Green)	
Status	Description	Status	Description
Yellow Blinki ng	Data transmission or receiving is occurring	Solid Green	PSE Ready
Off	No data transmission or receiving is occurring	Off	W/O PSE

Remarks	J15 is via I210 Ethernet controller with optional OOB function J16 is directly from NVIDIA Jetson SOM.with optional PSE (15W)

3.11 USB type C connector

Function	BSP Installation as recovery mode	
Location	J17	
Description	JACK_USB3.1_C TYPE(F)_90°_PIP-L1.45 ㎜	
Manufacturer Part number	ACES 57988-0240D-001	
Mating Connector	Any Standard Type-C interface cable or device.	
Pinout	Please refer to USB 3.2 type- C standard	
Remarks	USB2.0 Only(Device Mode)	

3.12 20-pin Expansion Terminal Block

Function	General-purpose input/output	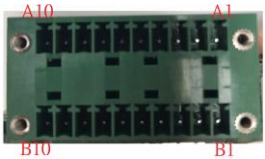
Location	J18	
Description	SOCKET_TERMINAL BLOCK_2*10PIN_90°_DIP	
Manufacturer Part number	DECA ME252-35020-1	
Mating Connector	DECA MC421-35010Z-1	
Remarks	Refer to follow tables	

Pin#	Signal Name	Module Pin #	Type/ Direction (Note.4)	Pin Drive or Power Pin Max Current	Power-on Default	Notes
A1	+5V_SYSTEM	-	Power	1A	-	1
A2	GND	-	Ground	-	-	-
A3	UART2_TXD_3V3	236	Output	±24mA	pd	3
A4	UART2_RXD_3V3	238	Input	±24mA	pd	3
A5	GND	-	Ground	-	-	-
A6	UART0_TXD_3V3	99	Output	±24mA	pd	3
A7	UART0_RXD_3V3	101	Input	±24mA	pd	3
A8	CANL	143	Bidir	-	-	6
A9	CANH	145	Bidir	-	-	6
A10	-	-	-	-	-	-
B1	+3V3_SYSTEM	-	Power	1A	-	1
B2	GND	-	Ground	-	-	-
B3	I2C1_SDA	191	Bidir OD	±2mA	z	2
B4	I2C1_SCL	189	Bidir OD	±2mA	z	2

B5	I2C0_ID_SDA	187	Bidir OD	±2mA	z	2
B6	I2C0_ID_SCL	185	Bidir OD	±2mA	z	2
B7	I2S0_SCLK_LS	199	Bidir	±24mA	pd	7
B8	I2S0_SDOUT_LS	193	Bidir	±24mA	pd	7
B9	I2S0_SDIN_LS	195	Bidir	±24mA	pd	7
B10	I2S0_LRCK_LS	197	Bidir	±24mA	pd	7

Notes:

1. **This is current capability per power pin.**
2. **These pins are connected to the SoC directly. They are open-drain (either pulled up or driven low by the SoC when configured as outputs). The max drive that meets the data sheet VOL is ±2 mA.**
3. **These pins connect to TI SN74LVC2T45 with H/W direction-control. The direction is unidirectional if these are configured as GPIOs.**
4. **In the Type/Dir column, directions indicate H/W ability, Birdir mean direction is controlled by S/W setting signal function.**
5. **All signals except CAN are 3.3V levels.**
6. **CANH/CANL is from CAN_RX/CAN_TX of SOC through CAN Transceivers IC**
7. **These pins connect to TI SN74LVC2T45 and he default direction is input. If these are configured as GPIOs, the direction is controlled by S/W control through SOC. Please refer to follow tables**

Pin#	Signal Name	Module Pin #	ModulePin #226 High level output	ModulePin #226) low level output
B7	I2S0_SCLK_LS	199	Output	Input(default)
B8	I2S0_SDOUT_LS	193		

Pin#	Signal Name	Module Pin #	ModulePin #206 High level output	ModulePin #206) low level output
B9	I2S0_SDIN_LS	195	Output	Input(default)
B10	I2S0_LRCK_LS	197		

3.13 Fan connector

Function	Fan Connector	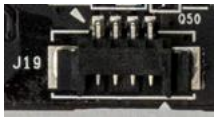
Location	J19	
Type Description	WAFER_1*4PIN_1.25 ㎜_90°	
Manufacturer Part number	ACES 50271-0040N-001	
Mating Connector	ACES ACES 50276-004H0H0-001	
Pinout		

Pin #	Description	Module Pin#	Type/ Dir

	1	GND	-	Ground
	2	+5V Power	-	Power, 5V
	3	FAN_TACH	208	Input, 5V
	4	FAN_PWM	230	Output, 5V
Remarks	None			

3.14 PSE Board Connector (for optional PSE board)

Function	PSE Board Connector.
Location	J24
Description	WAFER_2*6PIN_1 ㎜_180°_SMD
Manufacturer Part number	ACES 50238-01241-001
Mating Connector	ACES 50247-012H0H1-001

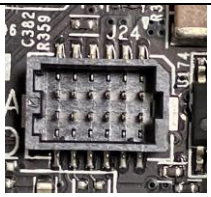

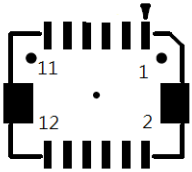

Pinout

PIN#	Description	Module Pin#	Type/ Dir
1	VDD	-	Power Out, 12-24V
2	GND	-	Ground
3	VDD	-	Power Out, 12-24V
4	GND	-	Ground
5	54V	-	Power In, 54V+
6	SYS_RST	239	Bidir, 3.3V
7	54V	-	Power In, 54V+
8	I2C1_SCL	189	Output, 3.3V

	9	54_N	-	Power In, 54V-
	10	I2C1_SDA	191	Bidir, 3.3V
	11	LED_PSE	-	Input, 3.3V
	12	+3V3_STANDBY	-	Power Out, 3.3V
Remarks	VDD is following DC_IN voltage LED_PSE low active, indicate PSE link is ready			

3.15 Expansion 5G Board Connector (for optional 5G Daughter Board)

Function	5G Board Connector	
Location	J26	
Description	WAFER_40PIN_0.5㎜_90°_SMD	
Manufacturer Part number	I-PEX 20455-040E-12	
Mating Connector	I-PEX 20453-240T-03	

Pinout

PIN#	Description	Module Pin#	Type/ Dir
1	VDD	-	Power, 12-24V
2			
3			
4			
5			
6			
7	GND	-	Ground
8	GND	-	Ground
9	GNSS_CTRL	220	Output, 1.8V
10	AIRPLANE_CTRL	228	Output, 1.8V
11	LTE_PWR	216	Output, 3.3V
12	PCIE_WAKEN	179	Input, 3.3V

13	PCIE3_CLKREQ	225	Input, 3.3V
14	PCIE3_RST	223	Output, 3.3V
15	GND	-	Ground
16	USB3_SSTX_P	168	Output, USB3.2
17	USB3_SSTX_N	166	Output, USB3.2
18	GND	-	Ground
19	USB3_SSRX_P	163	Input, USB3.2
20	USB3_SSRX_N	161	Input, USB3.2
21	GND	-	Ground
22	USB3_DP	117	Bidir, USB2.0
23	USB3_DN	115	Bidir, USB2.0
24	GND	-	Ground
25	-	-	-
26	-	-	-
27	GND	-	Ground
28	PCIE3_TX0_P	66	Output, PCIe
29	PCIE3_TX0_N	64	Output, PCIe
30	GND	-	Ground
31	-	-	-
32	-	-	-
33	GND	-	Ground
34	PCIE3_RX0_P	60	Input, PCIe
35	PCIE3_RX0_N	58	Input, PCIe
36	GND	-	Ground
37	PCIE3_CLK_P	229	Output, PCIe
38	PCIE3_CLK_N	227	Output, PCIe
39	GND	-	Ground
40	5G_RST	218	Output, 1.8V

Remarks	For 5G Board VDD is following DC_IN voltage PCIe related signal @PCIe3 (PCIe C9@0x140c0000) Support PCIe Gen4 x1 for Orin NX & PCIe Gen3 x1 for Orin Nano

3.16 OOB Board Connector #1 (for optional OOB board)

Function	OOB Board Connector (for NC-SI)
Location	J27
Description	WAFER_1*10PIN_1 ㎜_180°_SMD
Manufacturer Part number	ACES 50228-01071-001
Mating Connector	ACES 50233-010H0H0-001

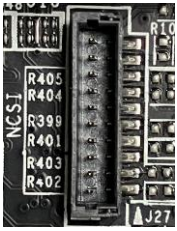

Pinout

PIN#	Description	Module Pin#	Type/ Dir
1	NC_SI_TXD0	-	Input, 3.3V
2	NC_SI_TXD1	-	Input, 3.3V
3	NC_SI_TX_EN	-	Input, 3.3V
4	GND	-	Ground
5	NC_SI_CLK_IN	-	Input, 3.3V
6	GND	-	Ground
7	NC_SI_RXD0	-	Output, 3.3V
8	NC_SI_RXD1	-	Output, 3.3V
9	NC_SI_CRS_DV	-	Output, 3.3V
10	GND	-	Ground

Remarks	For optional OOB with NCSI board

3.17 OOB Board Connector #2 (for optional OOB board)

Function	OOB Board Connector(basic function)
Location	J28
Description	WAFER_1*10PIN_1 ㎜_180°_SMD
Manufacturer Part number	ACES 50228-01071-001
Mating Connector	ACES 50233-010H0H0-001

Pinout

PIN#	Description	Module Pin#	Type/ Dir
1	GND	-	Ground
2	-	-	-
3	UART2_RX (Debug UART)	238	Input, 3.3V
4	UART2_TX (Debug UART)	236	Output, 3.3V
5	UART0_RX (Auto-link)	101	Input, 3.3V
6	UART0_TX (Auto-link)	99	Output, 3.3V
7	VDD_CVM_GP	-	Output, 3.3V
8	SYS_RST_AI	239	Input, 3.3V
9	BUTTON_PWR_ON_MCU	240	Input, 3.3V
10	+5V_STANDBY	-	Power, 5V

Remarks	For optional OOB board

3.18 Expansion connector for external power button

Function	External Power button	
Location	J29	
Description	WAFER_1*2PIN_1 ㎜_180°_SMD	
Manufacturer Part number	ACES 50228-00271-001	
Mating Connector	ACES 50233-002H0H0-001	
Pinout		

PIN#	Description	Module Pin#	Type/ Dir
1	BUTTON_PWR	240	Input, 3.3V
2	GND	-	Ground

Remarks	For optional external power button

3.19 Dip Switch button

Function	Fan PWM controller/Auto Power on	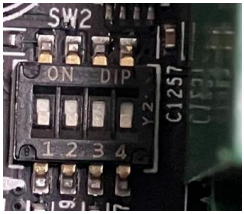
Location	SW2	
Description	4 SPST DIP switch	
Manufacturer Part number	DIPTRONICS DHN-04F-T-Q-T/R IN OFF-SWITCHING 0.025A/24VDC	

Pos. No	Description	Switch ON	Switch Off
1	Power ON mode	Always Power Enable	Always Power Disable
2	CAN0_Terminal	W/ 120ΩTerminal	W/O 120ΩTerminal
3	Power-Up / Start-up Control	"PWB Mode" - Power Button Press Required	"AT Mode" - Automatic Start-up Enabled
4	Fan Control	FAN Always ON (full speed running)	FAN PWM Enabled (SW Controlled)

Remark	• Blue font is default setting • When D115S is ON, if Power ON mode setting is "Always

	Power Enable", the system will restart automatically after shutdown. • Power-Up / Start-up Control setting is for DC Plug In

3.20 Power Control Button

Function	Power control button	
Location	SW3	
Description	Button	
Manufacturer Part number	Champway LS67AK-NBR-A-R2KA9	
Pinout	N/A	
Remark	• When D115S is in "PWB Mode," pressing the button will initiate the boot-up sequence. • When D115S is ON, pressing the button will display the Power Off GUI. If no operation is performed, the system will automatically power off in 60 seconds. • When D115S is ON, holding the button for more than 5 seconds will force a full system power down.	

3.21 Force Recovery Button

Function	Force recovery	
Location	SW4	
Type Description	Button	
Manufacturer Part number	Champway LS67AK-NBR-A-R2KA9	
Pinout	N/A	
Remark	• No function during normal operation. • The SOM will enter recovery mode when held down during power ON	

Other Switches and Jumpers

Other switches and jumpers listed on the boards but not mentioned in this manual are reserved for internal use by AVerMedia. They are not open to the client application.

4.0 Installation

4.1 BSP Setup Instructions

BSP (board support package) file: AVERMEDIA_JETPACK_-R1.1.*.6.*.*_desktop.tar.gz for D115SOXPIf you want to get the BSP download link, please contact with AVerMedia FAE. Default login username/password of the BSP is nvidia/nvidia. If you have difficulties to access the BSP download link, please visit AVerMedia website athttps://www.avermedia.com/professional/download, or contact technical support athttps://www.avermedia.com/professional/technical_support or e-mail us ateusupport@avermedia.com for further assistance. BSP Installation steps for NVIDIA Jetson board: (Important Note: Please backup your personal files before re-flashing BSP)After you download the BSP file and put the file in a Linux PC, please refer to the steps below tore-flash BSP.

4.2 Let the JETSON Orin NX/NANO initiate recovery mode

You have to keep pressing “Recovery” button and then power on the NVIDIA Jetson board to initiate recovery mode. When connecting a NVIDIA Jetson board to a Linux PC via a USB type-C to USB cable, you can check kernel messages with `dmesg` command in the Linux PC. Once you see these similar messages in the kernel messages, this means that the NVIDIA Jetson board is in the recovery mode.

[24685.229129] usb 1-7: Product: APX

[24685.229132] usb 1-7: Manufacturer: NVIDIA Corp

4.3 Using the commands below in the Linux PC to start re-flashing BSP

$ sudo tar zxvf <BSP_tarball_filename>.tar.gz

where <BSP_tarball_filename> is the BSP tarball file name for your target device.

$ cd JetPack_xxx/Linux_for_Tegra

$ ./setup.sh

$ ./install.sh

Note: sudo is required to extract the BSP.

About how to Flash BSP for Orin NX/NANO, please refer to following link for more instructions

https://www.avermedia.com/professional/support/faq/how-to-flash-bsp-for-orin-nano-nx

5.0 Software

This section describes BSP's features for D115SOXP

1. Support optional M.2 WI-FI/Bluetooth modules (Intel® Wi-Fi 6E AX210), the manager UI of AX210 Wi-Fi/Bluetooth is located on the upper-right corner of Ubuntu desktop. It can be also controlled by nmcli/hcitool uncommand line.
2. Power Mode Power mode can be modified by the UI on the upper-right corner of Ubuntu or the following commands.

```
# get current power mode
$ sudo /usr/sbin/nvpmodel -q
# setup power mode

# where <x> is power mode number, please refer to (>=
r36.x.x)

https://docs.nvidia.com/jetson/archives/r36.4.3/DeveloperGuide/
SD/PlatformPowerAndPerformance/JetsonOrinNanoSeriesJetson
OrinNxSeriesAndJetsonAgxOrinSeries.html#power-mode-contr
ols for more information
$ sudo nvpmodel -m <x>
```

   * Current default power mode:
   D115SOXP: 15W (2)

3. RTC Battery

   The following command can get RTC battery voltage.

```
$ sudo avt_tool -a | grep -oP "AIN5.*\[\K[^\]]*"
```

4. Fan Speed

   The following commands can get PWM fan information.

```
# get current speed setting of PWM Fan (0 ~ 255)
$ cat /sys/devices/platform/pwm-fan/hwmon/hwmon<x>/pwm1

# get Fan RPM value
$ cat /sys/devices/platform/bus@0/39c0000.tachometer/hwmon/hwmon<y>/rpm
```

   * Where <x> and <y> are dynamic hwmon indexes, with x = 1 and y = 3.

5. MIPI CSI Camera

There are 2x 2-lane and 1x 4-lane MIPI CSI camera supported on D115S, for current supported products type are listed as below:

* IMX219 (2-lane)
* IMX477 (2-lane)
* IMX179 (2-lane)
* IMX290 (2-lane)
* IMX290ISP (2-lane)

Test Command:

> Raspberry pi v2:

* Please follow the settings below first:

1. Set the power mode to maximize at 25W.
2. Follow the settings in the Release Notes, and maximize the ISP & VI clock.

No	width	height	framerate
0	3264	2464	21
1	3264	1848	28
2	1920	1080	30
3	1640	1232	30
4	1280	720	60

$ gst-launch-1.0 nvarguscamerasrc sensor-id=0 ! 'video/x-raw(memory:NVMM), width=(int)3280, height=(int)2464, format=(string)NV12, framerate=(fraction)21/1' ! queue ! nvvidconv ! xvimagesink -e

$ gst-launch-1.0 nvarguscamerasrc sensor-id=0 ! 'video/x-raw(memory:NVMM), width=(int)3280, height=(int)1848, format=(string)NV12, framerate=(fraction)28/1' ! queue ! nvvidconv ! xvimagesink -e

$ gst-launch-1.0 nvarguscamerasrc sensor-id=0 ! 'video/x-raw(memory:NVMM), width=(int)1920, height=(int)1080, format=(string)NV12, framerate=(fraction)30/1' ! queue ! nvvidconv ! xvimagesink -e

$ gst-launch-1.0 nvarguscamerasrc sensor-id=0 ! 'video/x-raw(memory:NVMM), width=(int)1640, height=(int)1232, format=(string)NV12, framerate=(fraction)30/1' ! queue ! nvvidconv ! xvimagesink -e

$ gst-launch-1.0 nvarguscamerasrc sensor-id=0 ! 'video/x-raw(memory:NVMM), width=(int)1280, height=(int)720, format=(string)NV12, framerate=(fraction)60/1' ! queue ! nvvidconv ! xvimagesink -e

Multiple:

$ gst-launch-1.0 nvarguscamerasrc sensor-id=0 ! 'video/x-raw(memory:NVMM), width=(int)3264, height=(int)2464, format=(string)NV12, framerate=(fraction)21/1' ! queue ! nvvidconv ! xvimagesink -e & gst-launch-1.0 nvarguscamerasrc sensor-id=1 sensor-mode=0 ! 'video/x-raw(memory:NVMM), width=(int)3264, height=(int)2464, format=(string)NV12, framerate=(fraction)21/1' ! nvvidconv ! xvimagesink -e &

> Raspberry pi v2 (imx477):

No	width	height	framerate
0	3840	2160	30
1	1920	1080	60

$ gst-launch-1.0 -e nvarguscamerasrc sensor-id=0 ! 'video/x-raw(memory:NVMM),width=3840,height=2160,framerate=30/1' ! queue ! nvvidconv ! fpsdisplaysink video-sink='xvimagesink' sync=false

$ gst-launch-1.0 -e nvarguscamerasrc sensor-id=0 ! 'video/x-raw(memory:NVMM),width=1920,height=1080,framerate=60/1' ! queue ! nvvidconv ! fpsdisplaysink video-sink='xvimagesink' sync=false

Multiple:

$ gst-launch-1.0 nvarguscamerasrc sensor-id=0 ! "video/x-raw(memory:NVMM),width=1920,height=1080,framerate=60/1" ! nvvidconv ! xvimagesink -e & gst-launch-1.0 nvarguscamerasrc sensor-id=1 ! "video/x-raw(memory:NVMM),width=1920,height=1080,framerate=60/1" ! nvvidconv ! xvimagesink -e &

> IMX179 :

No	width	height	framerate
0	3280	2464	15
1	1920	1080	30
2	3280	1698	30
3	2096	1084	30
4	1640	1232	30
5	820	616	30
6	820	616	60

$ gst-launch-1.0 nvarguscamerasrc sensor-id=0 ! 'video/x-raw(memory:NVMM), width=(int)3280, height=(int)2464, format=(string)NV12, framerate=(fraction)15/1' ! queue ! nvvidconv ! xvimagesink -e

$ gst-launch-1.0 nvarguscamerasrc sensor-id=0 ! 'video/x-raw(memory:NVMM), width=(int)1920, height=(int)1080, format=(string)NV12, framerate=(fraction)30/1' ! queue ! nvvidconv ! xvimagesink -e

$ gst-launch-1.0 nvarguscamerasrc sensor-id=0 ! 'video/x-raw(memory:NVMM), width=(int)3280, height=(int)1698, format=(string)NV12, framerate=(fraction)30/1' ! queue ! nvvidconv ! xvimagesink -e

$ gst-launch-1.0 nvarguscamerasrc sensor-id=0 ! 'video/x-raw(memory:NVMM), width=(int)2096, height=(int)1084, format=(string)NV12, framerate=(fraction)30/1' ! queue ! nvvidconv ! xvimagesink -e

$ gst-launch-1.0 nvarguscamerasrc sensor-id=0 ! 'video/x-raw(memory:NVMM), width=(int)1640, height=(int)1232, format=(string)NV12, framerate=(fraction)30/1' ! queue ! nvvidconv ! xvimagesink -e

$ gst-launch-1.0 nvarguscamerasrc sensor-id=0 ! 'video/x-raw(memory:NVMM), width=(int)820, height=(int)616, format=(string)NV12, framerate=(fraction)30/1' ! queue ! nvvidconv ! xvimagesink -e

$ gst-launch-1.0 nvarguscamerasrc sensor-id=0 ! 'video/x-raw(memory:NVMM), width=(int)820, height=(int)616, format=(string)NV12, framerate=(fraction)60/1' ! queue ! nvvidconv ! xvimagesink -e

> IMX290 :

No	width	height	framerate
0	1948	1096	30
1	1948	1096	60

$ gst-launch-1.0 nvarguscamerasrc sensor-id=0 ! 'video/x-raw(memory:NVMM), width=(int)1948, height=(int)1096, format=(string)NV12, framerate=(fraction)30/1' ! queue ! nvvidconv ! xvimagesink -e

$ gst-launch-1.0 nvarguscamerasrc sensor-id=0 ! 'video/x-raw(memory:NVMM), width=(int)1948, height=(int)1096, format=(string)NV12, framerate=(fraction)60/1' ! queue ! nvvidconv ! xvimagesink -e

> IMX290ISP :

No	width	height	framerate
0	1920	1080	25/30/50/60
1	1280	960	25/30/50/60
2	1280	720	25/30/50/60
0	800	600	25/30/50/60
1	640	480	25/30/50/60
2	640	360	25/30/50/60

$ gst-launch-1.0 v4l2src io-mode=4 device=/dev/video0 do-timestamp=true ! 'video/x-raw, width=1920, height=1080, framerate=60/1, format=UYVY' ! queue ! xvimagesink sync=false

$ gst-launch-1.0 v4l2src io-mode=4 device=/dev/video0 do-timestamp=true ! 'video/x-raw, width=1280, height=960, framerate=30/1, format=UYVY' ! queue ! xvimagesink sync=false

$ gst-launch-1.0 v4l2src io-mode=4 device=/dev/video0 do-timestamp=true ! 'video/x-raw, width=1280, height=720, framerate=30/1, format=UYVY' ! queue !

```
xvimagesink sync=false

$ gst-launch-1.0 v4l2src io-mode=4 device=/dev/video0 do-timestamp=true !
'video/x-raw, width=800, height=600, framerate=30/1, format=UYVY' ! queue !
xvimagesink sync=false

$ gst-launch-1.0 v4l2src io-mode=4 device=/dev/video0 do-timestamp=true !
'video/x-raw, width=640, height=480, framerate=30/1, format=UYVY' ! queue !
xvimagesink sync=false

$ gst-launch-1.0 v4l2src io-mode=4 device=/dev/video0 do-timestamp=true !
'video/x-raw, width=640, height=360, framerate=30/1, format=UYVY' ! queue !
xvimagesink sync=false
```

6. CAN Bus

There is one CAN Bus for D115S, see the following command for usage.

(1) Enable and set up CAN Bus

```
# 1. Enable CAN Bus
$ sudo modprobe can
$ sudo modprobe can-raw
$ sudo modprobe mttcan
# 2. Setup CAN Bus
$ sudo ip link set can0 type can bitrate 500000 dbitrate 2000000 berr-reporting on fd
on restart-ms 100
$ sudo ip link set can0 up
```

(2) Receive and Send

```
# Receive
$ candump can0

# Send
$ cansend can0 <can_frame>
```

* where:
<can_frame> is CAN Bus frame message, see `cansend --help` for more detail.

7. GPIO usage

To control the GPIOs on the 20-pin I/O, you must first set their direction.

Chip.0 line.4 controls B7 and B8, while Chip.0 line.41 controls B9 and B10.

(1) Output

Set B7 high for 10 seconds.

```
$ sudo su
$ avt_tool –G 0 4 1
$ sudo gpioset --mode=time –sec=10 0 50=1
```

Note: When PH.07 is set as output, PI.01 can only be used as an output.

(2) Input

Get B7 value.

```
$ sudo su
avt_tool –G 0 4 0
$ sudo gpioget 0 50
# 1: HIGH,   0: LOW
```

(3) Disable

```
$ sudo pkill_avt_gpio
```

For L4T (Linux for Tegra) BSP support and the other software support associated with NVIDIA® Jetson Orin NX/Nano, please visit AVerMedia website to contact our technical support function. (https://www.avermedia.com/tw/support/contact)

5.1 Force Recovery Mode

USB 3.1 / Jetson platform port of D115SOXP can be used to re-program NVIDIA® Jetson Orin NX by using the other host system running NVIDIA Jetpack, as the procedure described below.

1. Power off the system. Ensure the system power must be completely OFF, instead of staying in suspend mode or the sleep mode.

2. Connect a USB cable from Jetson platform USB port to the other host system which will be used to re-program the new system file into NVIDIA® Jetson Orin NX

3. Press and hold down Force Recovery Button and then power on the carrier board.

4. After three seconds, release the Force Recovery Button.

5. NVIDIA® Orin NX will show up on the USB list of the host system as a new NVIDIA target device.

After the system software is updated successfully, please ensure to power off the system. A clean power-on will then revert Jetson platform port back to the host mode.

5.2 OOB Software Settings

Please refer to Getting Started with Allxon Remote Management Service

For more Allxon support, see https://www.allxon.com or contact them at service@allxon.com.

5.3 Power Consumption

Item Description	Power Consumption
Theoretical Maximum System Power Consumption	D115SOXP Power Consumption: 4.8W(standby) to 48W (full loading). The condition is connected to USB3.2 device*2, LAN *1, SSD 256G*1, WIFI AX210*1, HDMI*1, with CPU/ GPU super mode full loading. (maximum power consumption up to 90W based on adapter)
Typical System Power Consumption	The power consumption under the normal operating mode is depending on the application software running with NVIDIA® Jetson Orin NX

6.0 Dimension Drawings

6.1Dimension Drawings of carrier board

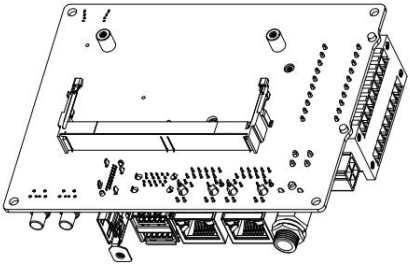

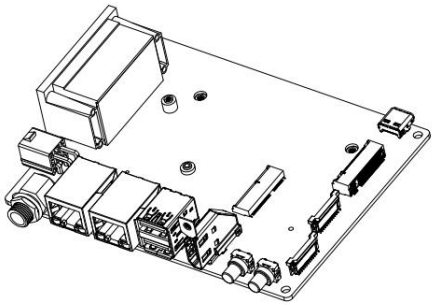

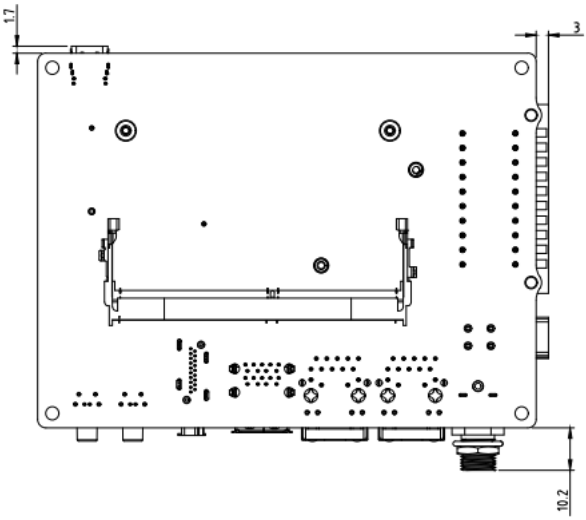

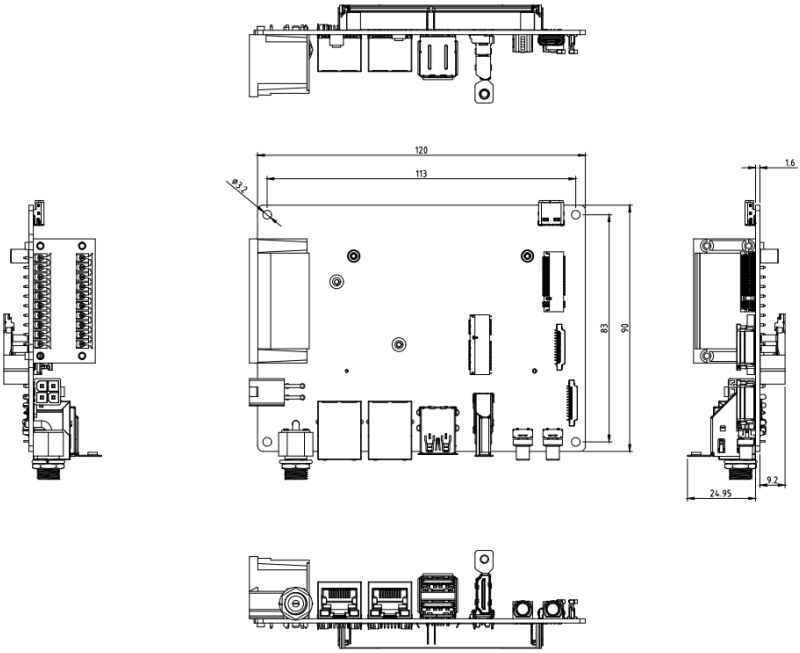
120
113
ø3.2
83
90
1.6
24.95
9.2

6.2 Dimension Drawing of D115S BOX PC

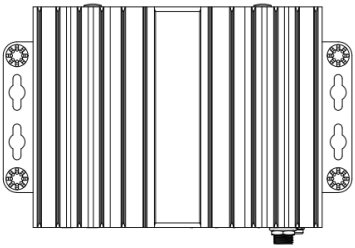

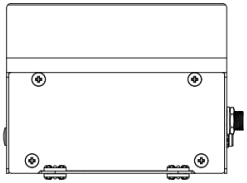

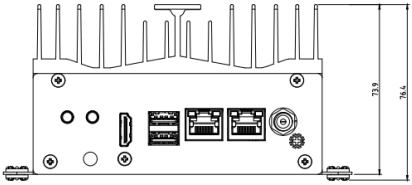

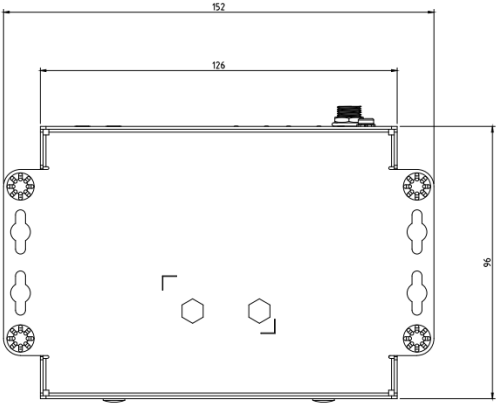

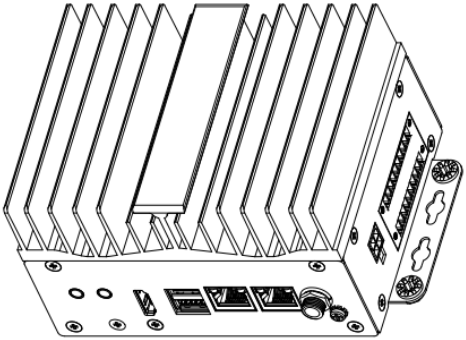

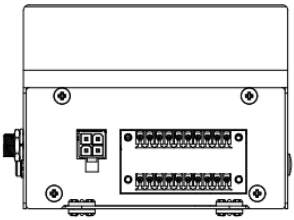

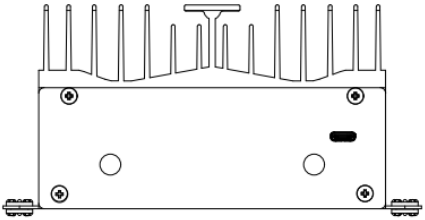

6.3 Dimension Drawing of PSE Board

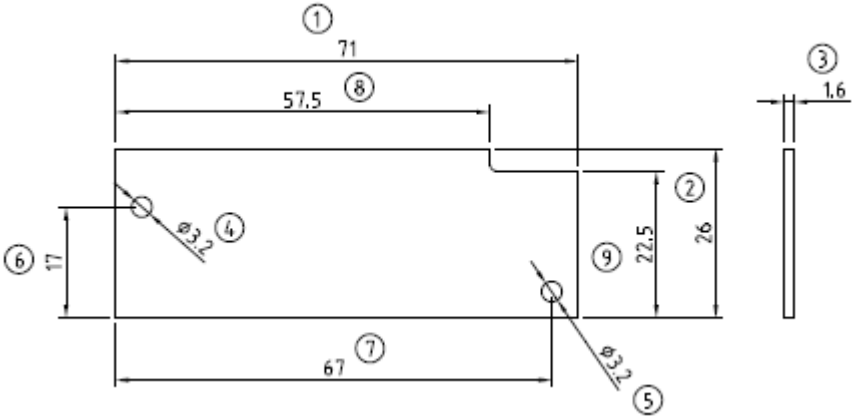

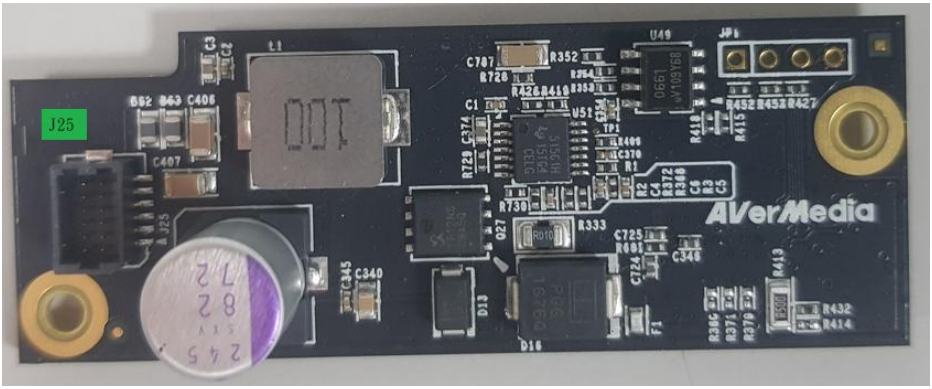

7.0 Accessory Drawings

7.1 Fan Module/Adapter/ Power Cord

Fan Module for Orin NX/Orin Nano

- Rated Voltage: 5V
- Operating Voltage Range: 3.5V~5.5V
- Rated Speed: 6000RPM±10%
  (Testing Speed After Continuous 3 Minute Operation at Ambient Temperature Of 25℃)
- Life Expectancy: 70,000hours at 40℃ (WITH 15~65% RH)
- Bearing Type: Two Ball

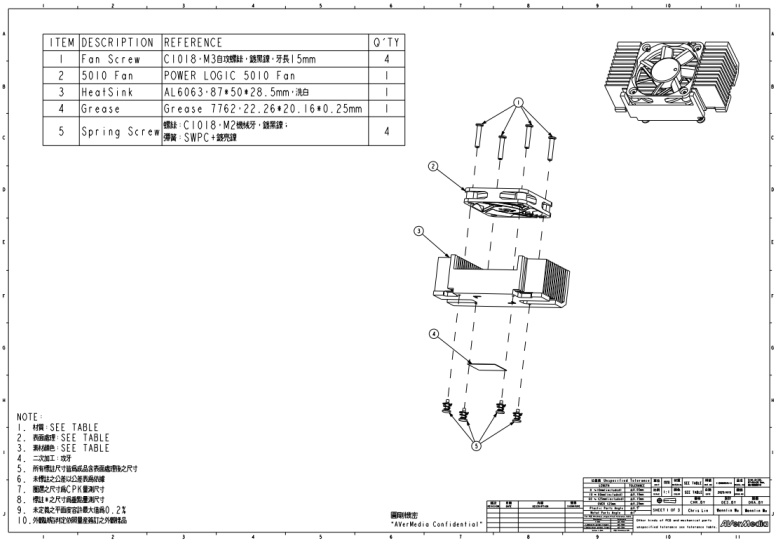

Power Adapter 041312GOYANW (for Super Mode)

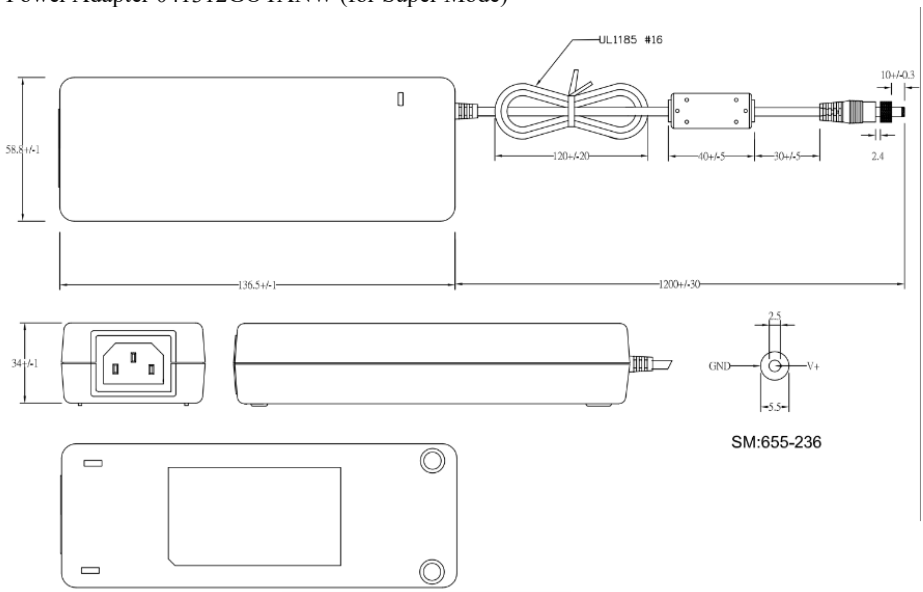

064APOWERBRX-IPD (TW version)

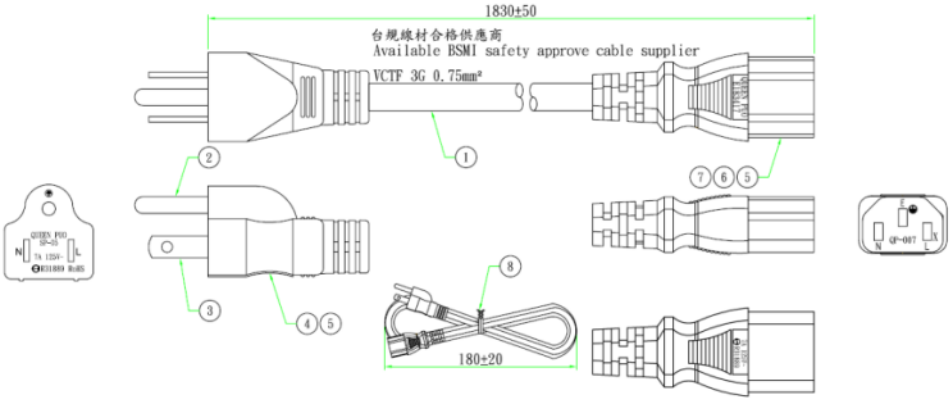

064APOWERBR2-IPD (US version)

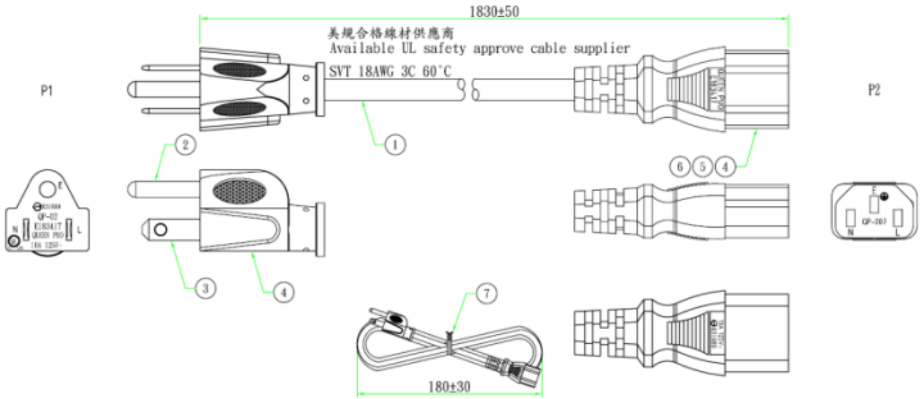

064APOWERBRW-IPD (UK version)

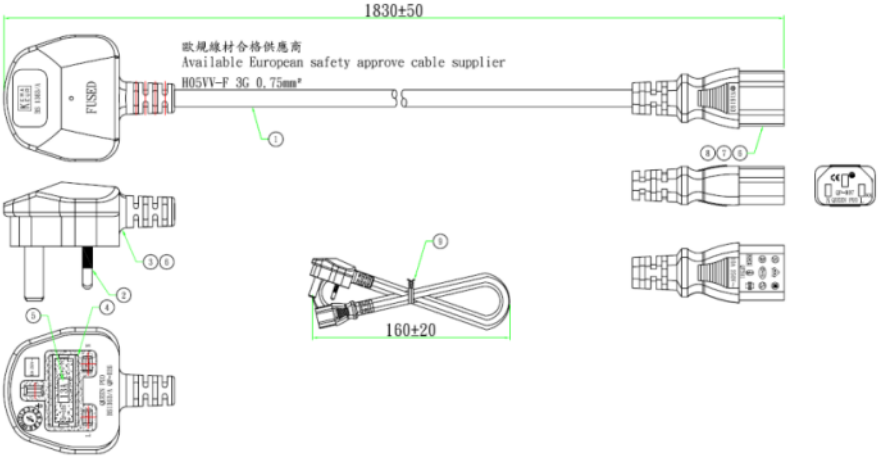

064APOWERBR5-IPD (EU version)

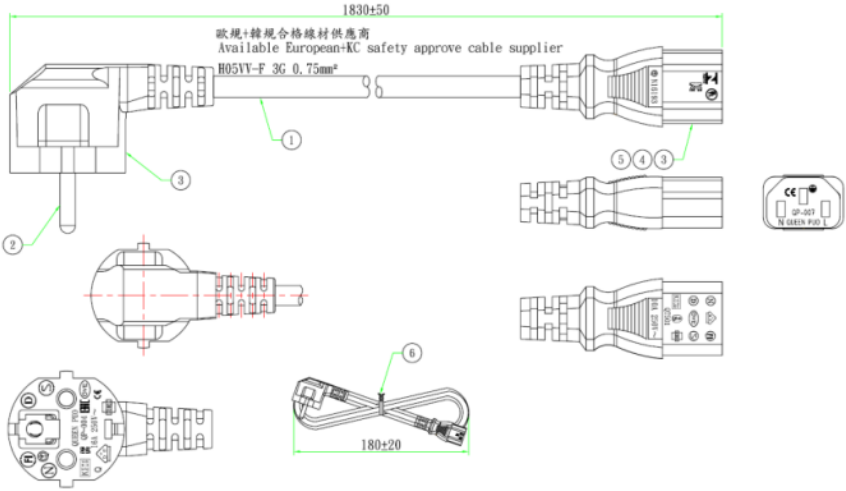

064APOWERBSL (JP version)

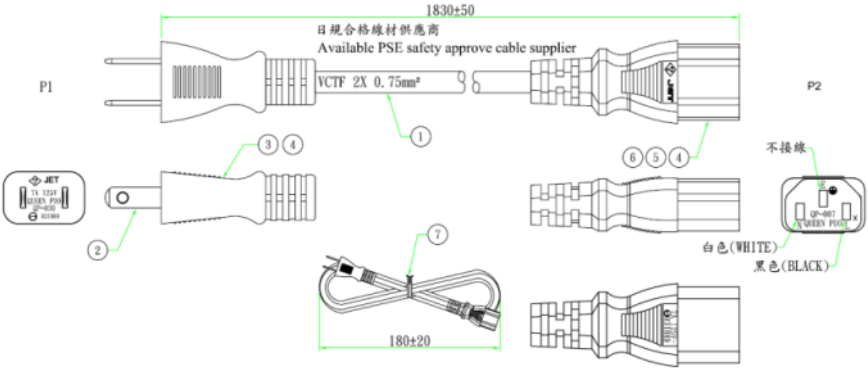

064APOWERBR4-IPD (CN version)

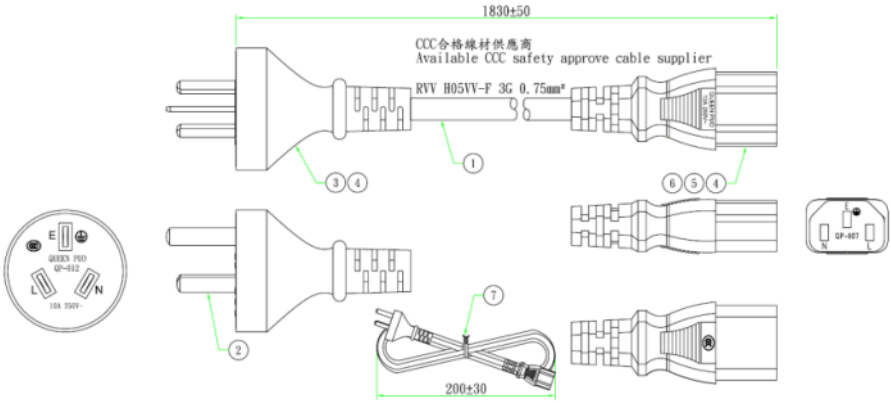

8.0 Accessory Assembly SOP

8.1 PSE board

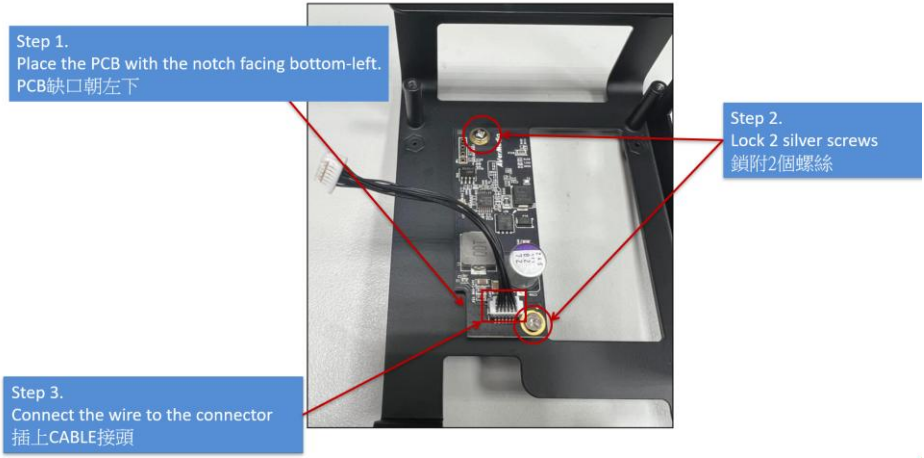

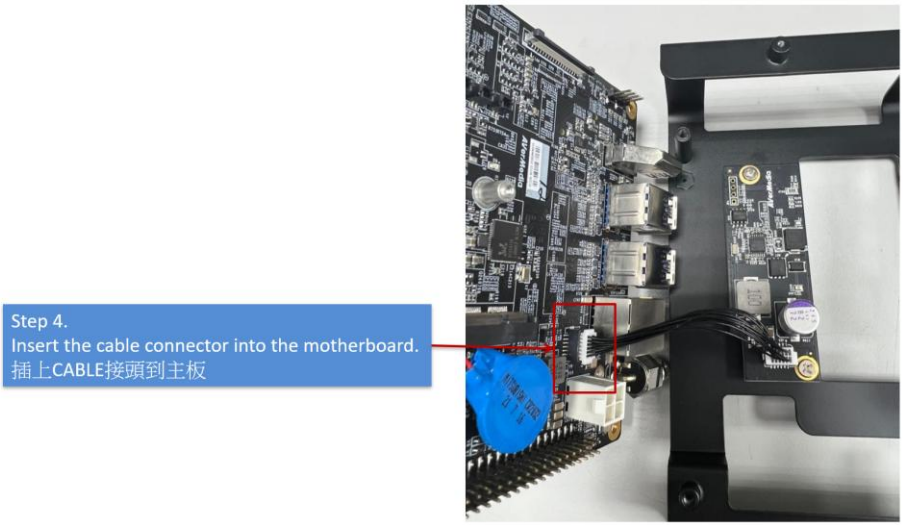

Step 5.
Store the wires within the space between the large capacitor and the external connectors, ensuring they do not extend beyond the red box to avoid damaging the wires.
將線材收納在大電容與外部連接器間的空間，勿超出紅框範圍以免壓傷線材

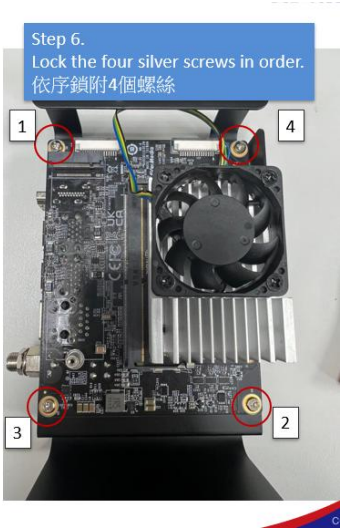

Step 6.
Lock the four silver screws in order.
依序鎖附4個螺絲

Step 7.
Assembly complete. PoE functionality can be used directly after installing the BSP.
組裝完成，安裝完BSP後可直接使用PoE功能