AVerMedia D315-2

Applies to NVIDIA® Jetson AGX Orin 32G/64G & Industrial module

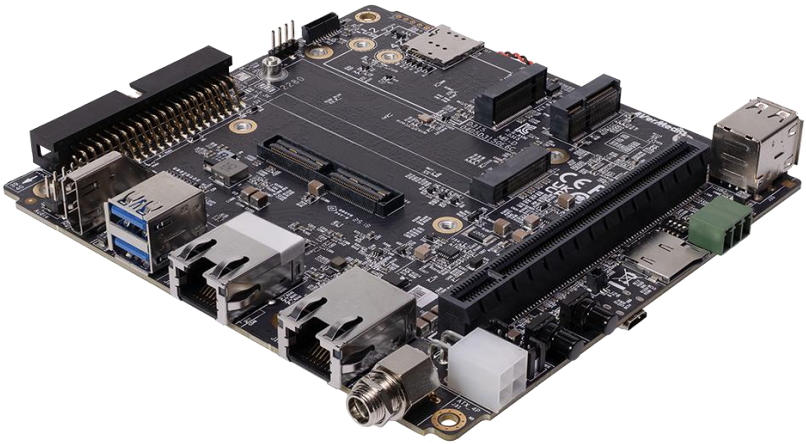

AVerMedia Technologies, Inc.
No. 135, Jian 1st Rd., Zhonghe Dist., New Taipei City 23585, Taiwan
Tel: 886-2-2226-3630

Fax: 886-2-3234-4842
Sales and Marketing: Contact
Technical Support: Professional User

Table of Contents

Preface ____ 3

Revision History ____ 4

1.0 Introduction *9*

1.1 Product Specifications ____ 10

1.2 Product Overview ____ 12

1.3 Connector Summary ____ 14

1.4 Carrier Board Interface ____ 16

2.0 Feature Description *19*

2.1 Jetson module Connector ____ 19

2.2 Fan Power connector ____ 19

2.3 RTC Battery Connector ____ 20

2.4 HDMI OUTPUT ____ 20

2.5 USB 3.2 Gen 2 Type-A Connector #1 , #2 ____ 20

2.6 M.2 E key 2230 ____ 21

2.7 M.2 M key 2280 ____ 21

2.8 USB 2.0 Micro B Connector ____ 21

2.9 Micro SD Card Slot ____ 22

2.10 10 Gigabit Ethernet Connector ____ 22

2.11 40-Pin expansion header ____ 24

2.12 Audio pin header ____ 25

2.13 Gigabit Ethernet Connector ____ 25

2.14 Micro SIM Card Socket ____ 27

2.16 OOB board connector ____ 29

2.17 DC POWER JACK 30
2.18 ATX 4P 30
2.19 USB 2.0 Gen 1 Type-A Connector #1 , #2 31
2.20 12V power connector for daughter board 31
2.21 PCIE x16 socket 32
2.22 Board to board connector (to Camera board) 32
2.23 CAN Bus 3-pin terminal block with transceiver 33
2.24 Debug port 33
2.25 Switch Button 34
2.26 Power &Recovery Button 34
3.0 Installation *35*
3.1 BSP Setup Instructions 35
4.0 Software *37*
5.0 Force Recovery Mode *41*
6.0 Power Consumption *42*
7.0 Accessory Drawings *43*
7.1 Fan Module/ Adapter/ Power Cord 43
8.0 D315AOP (2D Drawing) *52*
9.0 Thermal Pad for 10G IC *54*

Preface

Disclaimer

The information contained in this user manual, including but not limited to any product specification is subject to change without notice. AVerMedia assumes no liability for any damages incurred directly or indirectly from any technical or typographical errors or omissions contained herein or for discrepancies between the product and the user manual.

Technical Support

If you experience the difficulty after reading this manual and/or using the product, please contact the reseller from which you purchased the product. In most cases, the reseller can help you with the product installation and the difficulty you encountered.

In case the reseller is not able to resolve your problem, our highly capable global technical support team can certainly assist you. Our technical support section is available 24 hours a day and 7 days a week through our website, with the click here. For more contact information, you may find it in the section of AVerMedia Global Offices.

Contact Enquiry

For more information of our products, pricing, and order placement, please fill in our inquiry form here, we will contact you within 24 hours.

Download User Manual

Please click the link here to download the file of this user manual from AVerMedia website.

Revision History

Revision	Date	Updates
V1.0	Jul 10, 2025	1st Released
V1.1	Sep. 12, 2025	Modify Product Warranty

AVerMedia Global Offices

https://www.avermedia.com/professional/contact

Headquarters

Taiwan Office

No. 135, Jian 1st Rd., Zhonghe Dist., New Taipei City 23585,Taiwan

Tel: +886-2-2226-3630

Fax: +886-2-3234-4842

Sales & Marketing: Contact

Technical Support: Home users / Professional users

The Americas

USA Office

4038 Clipper Court Fremont, CA 94538

Tel: (510) 403-0006

Fax: (510) 403-0022

Sales & Marketing: Contact

Technical Support: Home users / Professional users

Brazil Office

Sales & Marketing: Contact

Technical Support: Home users / Professional users

Latin America Office

Sales & Marketing: Contact

Technical Support: Home users / Professional users

Europe

Head Office EU

AVT Solutions GmbH

Hanauer Landstrasse 291 B 60314 Frankfurt Hessen

Germany

: technicalsupport_120

Sales & Marketing: Contact

Technical Support: Home users / Professional users

Russia Office

Sales & Marketing: Contact

Technical Support: Home users / Professional users

Professional Solutions Support Tel:

+7 (925) 834-0310

Spain Office

AVerMedia Europe Group

Ronda de Poniente no. 4 segundo H

28760 Tres cantos, Madrid

Spain:

: technicalsupport_120

Sales & Marketing: Contact

Technical Support: Home users / Professional users

Asia-Pacific

China Office

Room 1510, No.488, Hitech Plaza, South Wuning Rd., Jingan District, Shanghai, China

Tel: +86-021-5298 7985

Fax: +86-021-5298 7981

Sales & Marketing: Contact

Technical Support: Home users / Professional users

Japan Office

6F,Kojimachi Syuei Bldg,4-3-13 Kudan-minami, Chiyoda-ku, Tokyo ,102-0074, Japan

Sales & Marketing: Contact

Technical Support: Home users / Professional users

Product Warranty

Please refer to Support | Warranty And Rma Services | AVerMedia

Copyright Notice

The information contained in this document is subject to change without notice. AVerMedia shall not be liable for errors contained herein or for incidental consequential damages in connection with the furnishing, performance, or use of this material. This document contains proprietary information that is protected by copyright. All rights are reserved. No part of this document may be photocopied, reproduced, or translated to another language without the prior written consent by AVerMedia.

Trademark Acknowledgement

AVerMedia acknowledges all the trademarks, registered trademarks, and/or copyrights referred to in this document as the property of their respective owners. Not listing all possible trademarks or copyright acknowledgments does not constitute the lack of acknowledgment to the rightful owners of the trademarks and copyrights mentioned in this document.

ESD Warning

Electronic components and circuits are sensitive to Electrostatic Discharge (ESD). When handling any circuit board assemblies including AVerMedia products, it is highly recommended that ESD safety precautions can be observed. ESD safe best practices can include, but are not limited to the following ones.

1. Leave the circuit board in the antistatic package until it is ready to be installed.
2. Use a grounded wrist strap when handling the circuit board. At a minimum, you need to touch a grounded metal object to dissipate any static charge, which may be present on you.
3. Avoid handling the circuit board in the carpeted areas.
4. Handle the board by the edges and avoid the contact with the components.
5. Only handle the circuit boards in ESD safe areas, which may include ESD floor and/or table mats, wrist strap stations, and ESD safe lab coats.

Safety Precaution:

1. All cautions and warnings on the device should be noted.
2. For safety consideration, do NOT open the device if not a qualified service stuff.
3. Place the device on a solid surface during installation to prevent falls.
4. Keep the device away from humidity.
5. Do NOT leave this device in an un-controlled environment with temperatures beyond the device's permitted storage temperature to avoid damage.
6. All adaptors and cables supplied by AVerMedia are verified. Do NOT use any others not supplied by AVerMedia to avoid any malfunction or fires.
7. Make sure the power source matches the power rating of the device.
8. Place the power cord where people cannot step on it. Do not put anything on the power cord.
9. Always completely disconnect the power while the device is not usage or idle for a long time.
10. Disconnect the device from any AC supply before cleaning. While cleaning, use a damp cloth instead of liquid or spray detergents.
11. Make sure the device is installed near a power outlet and easy for accessible.
12. Do not cover the openings on the device to ensure optimal heat dissipation.
13. Watch out the heatsink or heat spreader of the device when the system is running.
14. Never pour any liquid into the openings. This could cause fire or electric shock.
15. The static electricity should be noted while installing any internal components. Consider to use a grounding wrist strap and put all electronic parts in static-shielded containers.

If the following situations occur, please contact our service personnel:

(1) The device is dropped or damaged
(2) Damaged power cord or plug
(3) Exposure to moisture
(4) Liquid intrusion into the device
(5) Any obvious signs of damage displayed on the device
(6) Device is not working as expected or in a manner as described in this manual

1.0 Introduction

AVerMedia AVerMedia D315-2 include fully featured carrier board which is all developed for NVIDIA® Jetson AGX Orin 32G/64G & Industrial modules. D315-2 provide multiple I/O include one HDMI video output, two USB 3.2 ports, one GbE, one 10G RJ-45 port, 40-pin expansion, one M.2 Key E, one M.2 key M and one M.2 Key B.

Operating with NVIDIA® Jetson AGX Orin 32G/64G & Industrial modules and the rich I/O functions, AVerMedia D315-2 is the perfect choice for high-end performance AI edge computing platform for intelligent video analytics applications.

1.1 Product Specifications

NVIDIA Jetson SoM	NVIDIA® Jetson AGX Orin™ module (32GB or 64GB) & Industrial	
Networking	• 1x M.2 B key (for 4G LTE module or 5G module) • 1x M.2 E key (for Wi-Fi 6E) • 1x GbE RJ-45 • 1x 10G RJ-45	
Display Output	1x HDMI output	
Temperature	Operating temperature: D315-2 : -40°C~85°C Operating temperature: D315AO-2 : -25°C~70°C Operating temperature: D315AOB-2 : -25°C~65°C Operating temperature: D315AOP-2 32G : -25°C~50°C Operating temperature: D315AOP-2 64G : -25°C~40°C Operating temperature: D315AOP-2 64G Industrial : -25°C~40°C(TBD) Storage temperature -40°C ~ 85°C Relative humidity 40 °C @ 95%, Non-Condensing	
MIPI & SerDes Camera (120-pin)	GMSL2/FPD-link III/V-by-One® HS (STURDeCAM20 optional)	
USB	• 1x USB 2.0 Micro-B for recovery • 2x USB 2.0 Type-A • 2x USB 3.2 Type-A	
Audio	Intel HD Audio analog connector	
Storage	1x micro-SD card slot	
Expansion Header	• 1x M.2 B key (for 4G LTE module or 5G module) 40-pin (1x UART, 1x SPI, 1x CAN, 2x I2C, 1x I2S, 5x GPIOs) • 1x M.2 M key (for SSD or AVerMedia capture card: CN311-H, CN312SW, CN312MW) • 1x Micro SIM socket • 1x PCIe x16 (reserved, expansion for daughter board use, only support x8 PCIe lane) • 1x CAN bus with transceiver. • 120-pin (expansion for MIPI SerDes daughter board use) • Support StereoLabs ZED Link Capture Card (Quad) • Support OOB full function (This function is mutually exclusive option between UART@ JP8&J14)	
Power requirement	Voltage	DC 12~54V
	Current	DC IN Jack on board: 7A Max
		ATX 4pin: 10.8A Max
Power Cord	US/JP/EU/UK/TW/AU/CN (optional)	
Thermal Solution	• D315-2 with fan (optional) • D315AO-12 with fan • D315AOB-2 with fan • D315AOP-2 32G Heat sink with fanless	

	• D315AOP-2 64G Heat sink with fanless • D315AOP-2 64G Industrial Heat sink with fanless
Buttons	Power and Recovery
RTC Battery	Support RTC Battery and Battery Life Monitoring by MCU
Dimensions	• D315-2: 141.5mm (W) x 133.5mm (L) x 29mm(H),weight:189g • D315AO-2: 141.5mm(W) x 133.5mm(L) x 63mm(H) , weight: 720g • D315AOB-2: 181.5mm (W) x 137mm (L) x 88mm (H) (with mounting hole) , weight: 1.5kg • D315AOP-2 32G: 160mm(W)*136.9(L)*65mm(H), weight: 1.55kg • D315AOP-2 64G: 160mm(W)*136.9(L)*65mm(H), weight: 1.55kg
Certifications	CE, FCC, KC

1.2 Product Overview

1.2.1 D315-2 Box PC Compatible Cards

Warning: *Capture card assembly/installation into D315-2 Box PC should only be performed by AVerMedia to avoid damage and warranty void.*

Model Name	CN311-H	CN312SW	CN312MW
Host Interface	M.2 M key 2280	M.2 M key 2280	M.2 M key 2280
Max Input Resolution	4096x2160 30fps	2048x1080 60fps	●2Kp60 in (SDI) ●1920 x 1200p60 in (HDMI)
Max Record Resolution	4096x2160 30fps	1920x1080 60fps	1920x1080 60fps
Channel No.	1	2	2
Audio Interface	HDMI embedded	SDI embedded	SDI embedded HDMI embedded
Video Interface	HDMI	SDI	HDMI SDI
Color Depth/Precision	8/10 bit	8 bit	8 bit
Color Format	YUY2, YUYV	YUY2, YUYV	YUY2, YUYV
Operating Temperature	0°~40°C	-20°~70°C	-20°~70°C
Dimensions (LxW) mm	22x80	22x80	22x80

1.2.2 Block Diagram

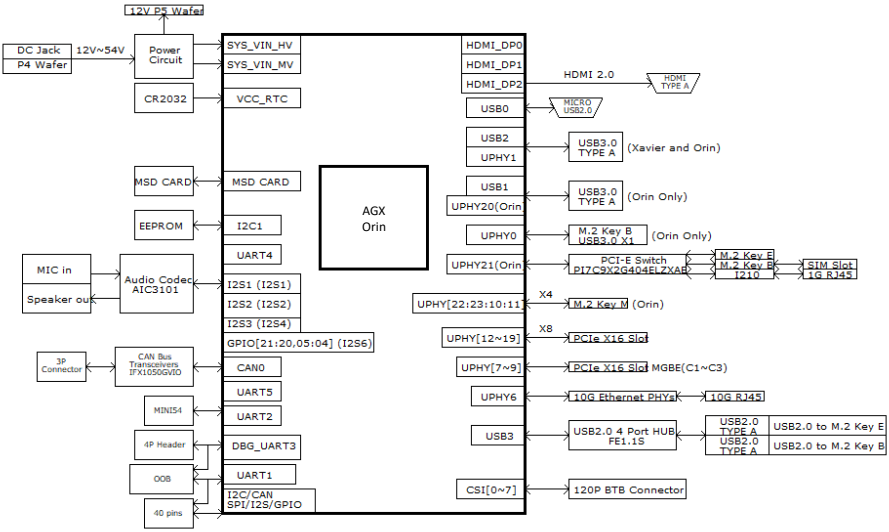

1.2.3 **Front View and Back View of Carrier board**

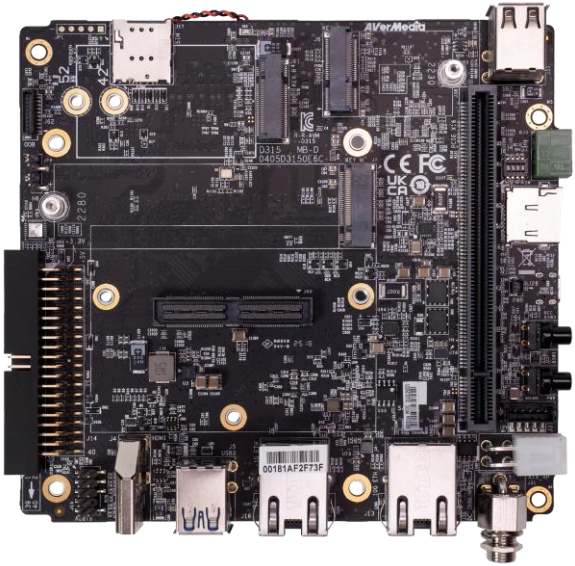

1.3 Connector Summary

J1	699-pin high-speed/high-density connector
J2	Fan Wafer
J3	External RTC Battery wafer
J4	HDMI output Type-A Vertical Side Connector (Female)
J5	USB 3.2 Gen2 Dual Port Type A Connector
J6	M.2 E-Key Socket
J7	M.2 M-Key Socket
J8	USB 2.0 Micro B Connector
J9	Micro SD Card Socket (Push-Push)
J13	10 Gigabit Ethernet Connector w/LEDs
J14	40-pin Expansion
J15	Audio 9-pin header
J16	Gigabit Ethernet Connector w/LEDs
J17	Micro SIM card socket (Push-Push)
J61	M.2 B-Key Socket
J62	OOB connector
J26	Power button connector
J30	DC power Jack with Lock
J31	Input Power – 4.2mm Pitch 90° ATX Power 4P
J33	USB 2.0 Gen1 Dual Port Type A Connector
J37	DC 12V connector for daughter board
J38	PCIE x16 socket
J60	120-pin high speed board to board connector (to Camera board)
BJ3	CAN bus 3-pin terminal block with transceiver

1.4 Carrier Board Interface

Top View Interface

J1	699-pin high-speed/high-density connector
J2	Fan Wafer
J3	External RTC Battery wafer
J8	USB 2.0 Micro B Connector

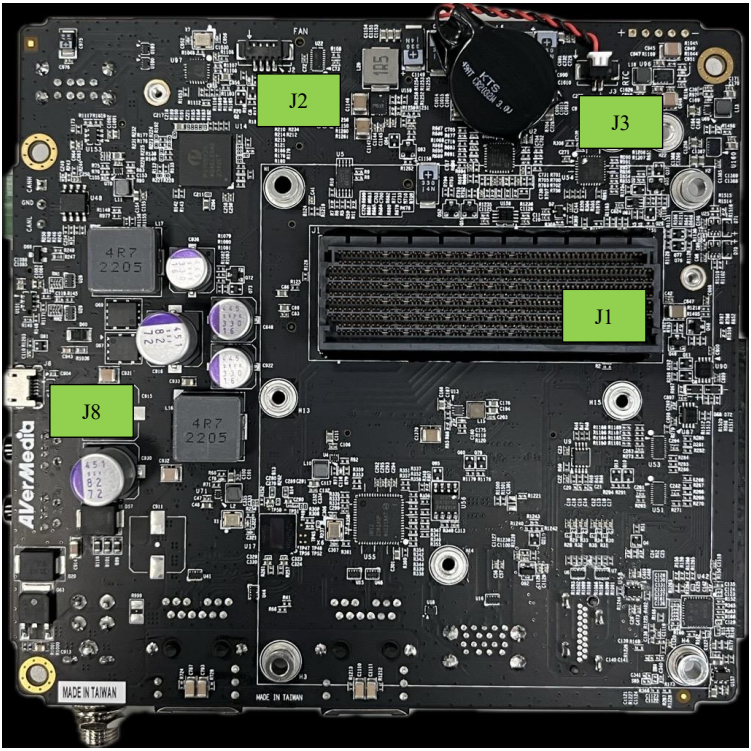

Bottom View Interface

J4	HDMI output Type-A Vertical Side Connector (Female)
J5	USB 3.2 Gen2 Dual Port Type A Connector
J6	M.2 E-Key Socket
J7	M.2 M-Key Socket
J9	Micro SD Card Socket (Push-Push)
J13	10 Gigabit Ethernet Connector w/LEDs
J14	40-pin Expansion
J15	Audio 9-pin header
J16	Gigabit Ethernet Connector w/LEDs
J17	Micro SIM card socket (Push-Push)
J61	M.2 B-Key Socket
J26	Power button connector
J62	OOB connector
J30	54V DC power Jack with Lock

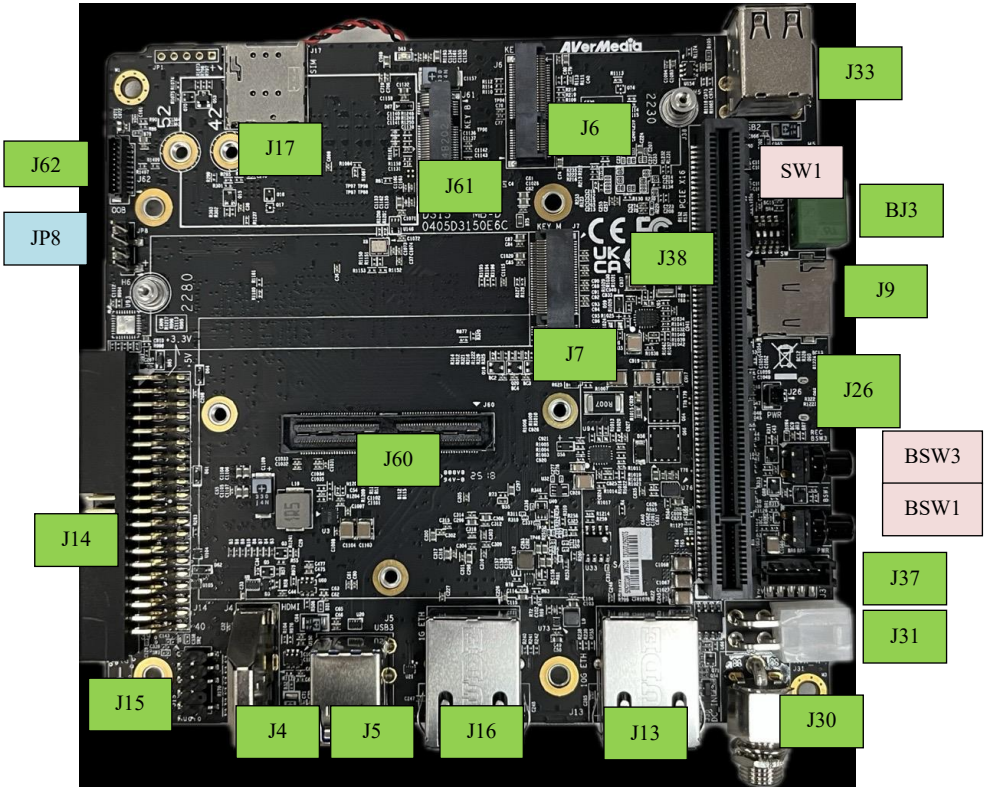

J31	Input Power – 4.2mm Pitch 90° ATX Power 4P
J33	USB 2.0 Gen1 Dual Port Type A Connector
J37	12V Power input for sub board
J38	PCIE X16 connector
J60	2x60 pin high speed board to board connector (to Camera board)
BJ3	CAN bus 3-pin terminal block with transceiver
JP8	Debug port
SW1	Switch Button
BSW1	Power Button w/LEDs
BSW3	Recovery Button w/LEDs

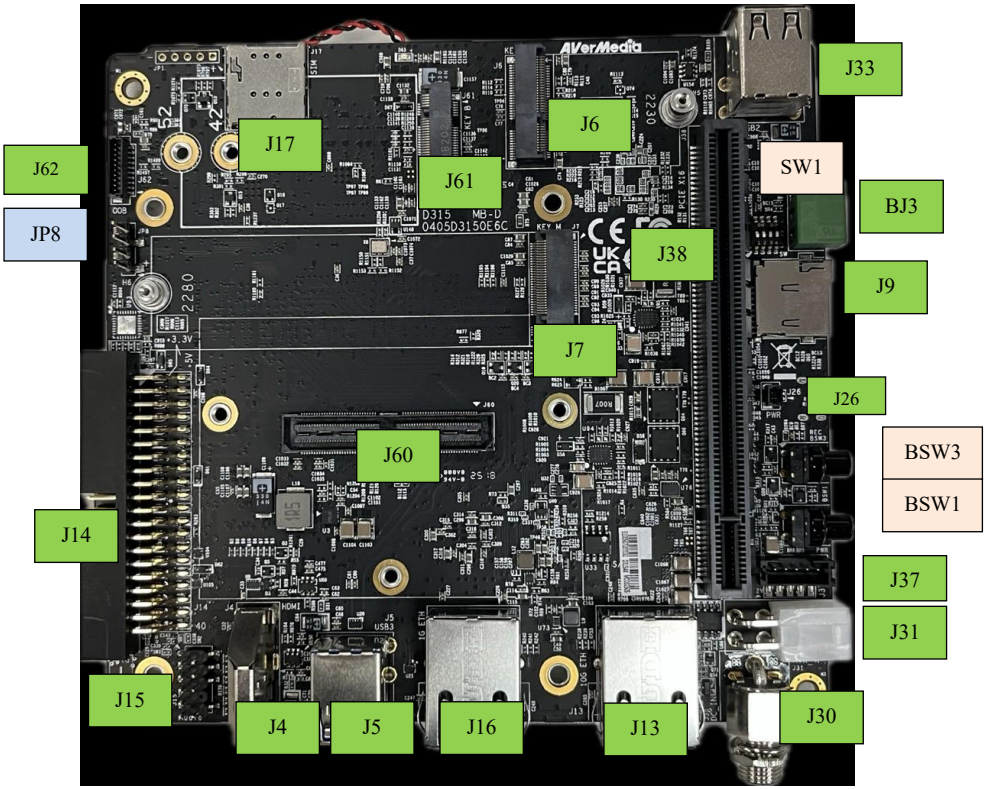

2.0 Feature Description

2.1 Jetson module Connector

Function	Provide connection with NVIDIA® Jetson™ AGX Orin™ and AGX Orin™ Industrial module	
Location	J1	
Type Description	MOLEX 699pin socket	
Manufacturer and Part Number	MOLEX,203456-0003	
Mating Connector	MOLEX,203456-0003	
Pinout	Please refer to NVIDIA Jetson™ AGX Orin™, AGX Orin™ Industrial and AGX Orin™, AGX Orin™ Industrial System-on-Module datasheet for pinout details.	
Remarks	https://developer.nvidia.com/ embedded/downloads	

2.2 Fan Power connector

Function	Fan Power Connector	
Location	J2	
Type Description	WAFER_1*4PIN_1.25 ㎜_90°	
Manufacturer and Part Number	ACES 50271-0040N-001_BLACK	
Mating Connector	ACES 50276-004H0H0-001	
Pinout		
Remarks	None	

Pin #	Description
PIN 1	GND
PIN 2	+12V Power
PIN 3	FAN_TACH
PIN 4	FAN_PWM

2.3 RTC Battery Connector

Function	RTC battery for module
Location	J3
Type Description	1.25mm wire-to-board header
Manufacturer and Part Number	宏致_ACES 50271-00201-001_BLACK
Mating Connector	Molex, 51021-8602
Pinout	Pin # / Description PIN1 / GND PIN2 / 3V Power
Remarks	RTC Battery:, CR2032 3V

2.4 HDMI OUTPUT

Function	HDMI output connector
Location	J4
Type Description	HDMI Type-A female connector
Manufacturer and Part Number	捷湧 EDL TECHNOLOGY CO. HM-FVD480B
Mating Connector	Any HDMI standard Type-A interface cable or device.
Pinout	Please refer to HDMI standard.
Remarks	None

2.5 USB 3.2 Gen 2 Type-A Connector #1 , #2

Function	USB 3.2 Gen 2 Type-A connector #1 #2
Location	J5
Type Description	Dual-port USB 3.2 Gen 2 Type-A female connector
Manufacturer and Part Number	冠泰 Champway CU3B-AFR15U-096H
Mating Connector	Any USB 3.2 Gen 2 standard Type-A interface cable or device.
Pinout	Please refer to USB 3.2 Gen 2 standard.

Remarks	None

2.6 M.2 E key 2230

Function	M.2 E key	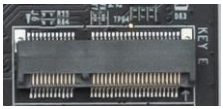
Location	J6	
Type Description	SOCKET_M.2-KEY E_75PIN_90°_SMD	
Manufacturer and Part Number	宏致_ACES 51748-07502-005_P0.5 ㎜-H8.5 ㎜	
Mating Connector	Any M.2 E key 2230 card standard interface device.	
Pinout	Please refer to M.2 E key card standard for the pinout details.	
Remarks	None	

2.7 M.2 M key 2280

Function	M.2 M key	
Location	J7	
Type Description	SOCKET_M.2-KEY M_75PIN_90°_SMD	
Manufacturer and Part Number	宏致_ACES 51757-0750C-012_P0.5 ㎜-H5.5 ㎜	
Mating Connector	Any M.2 M key 2280 card standard interface device.	
Pinout	Please refer to M.2 M key card standard for the pinout details.	
Remarks	None	

2.8 USB 2.0 Micro B Connector

Function	BSP Installation as recovery mode	
Location	J8	
Type Description	USB micro-type B female connector	
Manufacturer and Part Number	福軒 Fullglory FG-MCB-111440	
Mating Connector	Any USB standard Micro-type interface cable or device.	

Pinout	Please refer to USB Micro-type standard.	
Remarks	None	

2.9 Micro SD Card Slot

Function	Micro SD Card	
Location	J9	
Type Description	SOCKET_MICRO SD CARD_9PIN_90°_SMD	
Manufacturer and Part Number	福軒 Fullglory FG-0011BAAS09A	
Pinout	Refer to MicroSD card standard	
Remark	Push-Push	

2.10 10 Gigabit Ethernet Connector(Original)

Function	10 Gb single-port Ethernet connector, used to connect to the host system.	
Location	J13	
Type Description	RJ45 with integrated magnetics	
Manufacturer and Part Number	志展 Compupack(CPC) ACNRJJA0001-006 10G-LEFT(G/Y)+RIGHT(Y)-UP	
Mating Connector	Any standard 10Gb Ethernet mating connector can be applicable.	
Pinout	Comply with Ethernet standards.	
Remarks	None	

10 Gigabit Ethernet Connector(PCN20240528-1)

Function	10 Gb single-port Ethernet connector, used to connect to the host system.	
Location	J13	
Type Description	RJ45 with integrated magnetics	

Manufacturer and Part Number	UDE 湧德 S26-ZZ-0086 10G-LEFT(G/Y)+RIGHT(Y)-UP	
Mating Connector	Any standard 10Gb Ethernet mating connector can be applicable.	
Pinout	Comply with Ethernet standards.	
Remarks	**Table-1**	

Table-1

Original (Compupack 志展)	New (UDE 湧德)
Top View in Carrier board	
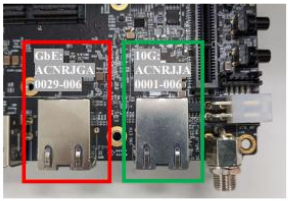	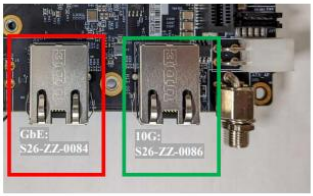
Back View in Carrier board	
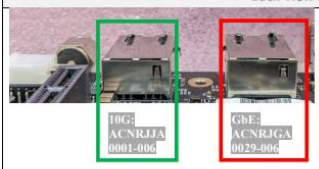	
Front View in box PC	
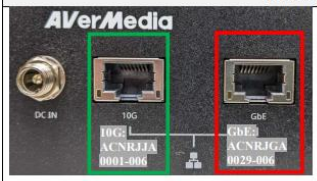	

2.11 40-Pin expansion header

Function	General-purpose input/output	
Location	J14	
Type Description	HEADER_BOX_2*20PIN_2.54 ㎜ _90°_SMD	
Manufacturer and Part Number	志展 Compupack(CPC) ACNBH420029-040	
Mating Connector	Any 2.54mm pitch standard interface female	

Pinout

[PCB Ver.C]

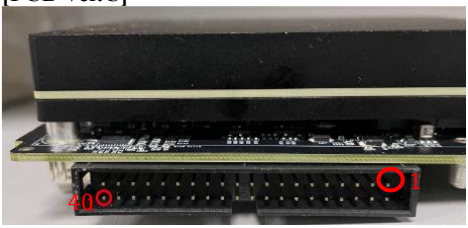

Sysfs GPIO	Connector Label	Pin	Pin	Connector Label	Sysfs GPIO
	3.3 VDC	1	2	5.0 VDC	
/dev/i2c-7	I2C_GP8_DAT	3	4	5.0 VDC	
	I2C_GP8_CLK	5	6	GND	
gpio454	MCLK05	7	8	UART1_TX	/dev/ttyTHS0
	GND	9	10	UART1_RX	
SFIO (gpio460)	UART1_RTS	11	12	I2S2_CLK	gpio398
SFIO (gpio456)	PWM01	13	14	GND	
gpio433	GPIO27_PWM2	15	16	GPIO8_AO_DMIC_IN_DAT	gpio325
	3.3 VDC	17	18	GPIO35_PWM3	gpio391
gpio483	SPI1_MOSI	19	20	GND	
gpio482	SPI1_MISO	21	22	GPIO17_40HEADER	gpio444
gpio481	SPI1_SCK	23	24	SPI1_CS0	gpio484
	GND	25	26	SPI1_CS1	gpio485
/dev/i2c-1	I2C_GP2_DAT	27	28	I2C_GP2_CLK	/dev/i2c-1
CAN0	CAN0_RX	29	30	GND	
	CAN0_TX	31	32	GPIO9_CAN1_GPIO0	gpio324
gpio318	CAN1_DOUT	33	34	GND	
gpio401	I2S2_FS	35	36	UART1_CTS	SFIO (gpio461)
gpio319	CAN1_DIN	37	38	I2S2_SDIN	gpio400
	GND	39	40	I2S2_SDOUT	gpio399

Remarks	None

2.12 Audio pin header

Function	Audio 9-pin header.
Location	J15
Type Description	HEADER_PIN_2*5(-8)PIN_2.54 ㎜ _180°_SMD
Manufacturer and Part Number	頻銳 Pinrex 212-92-05GBER
Mating Connector	Any 2.54mm pitch standard interface female
Pinout	

Definition	Pin No.	Pin No.	Definition
MIC_L	1	2	GND
MIC_R	3	4	NC
Line Out (R)	5	6	NC
NC	7	8	(No Pin)
Line Out (L)	9	10	NC

Remarks	None

2.13 Gigabit Ethernet Connector(Original)

Function	1Gb single-port Ethernet connector, used to connect to the host system.
Location	J16
Type Description	RJ45 with integrated magnetics
Manufacturer and Part Number	志展 Compupack(CPC) ACNRJGA0029-006 1G-LEFT(G/Y)+RIGHT(Y)-UP
Mating Connector	Any standard 1Gb Ethernet mating connector can be applicable.
Pinout	Comply with Ethernet standards.

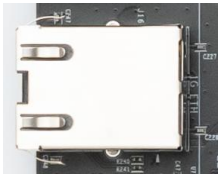

Remarks	None

Gigabit Ethernet Connector(PCN20240528-1)

Function	1Gb single-port Ethernet connector, used to connect to the host system.	
Location	J16	
Type Description	RJ45 with integrated magnetics	
Manufacturer and Part Number	UDE 湧德 S26-ZZ-0084 1G-LEFT(G/Y)+RIGHT(Y)-UP	
Mating Connector	Any standard 1Gb Ethernet mating connector can be applicable.	
Pinout	Comply with Ethernet standards.	

Remarks	Table-1 Original (Compupack 志展) / New (UDE 湧德) Top View in Carrier board 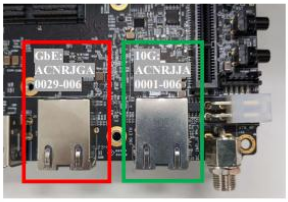 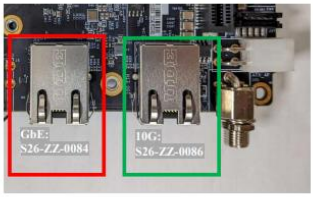 Back View in Carrier board 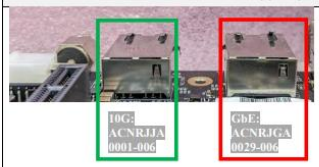 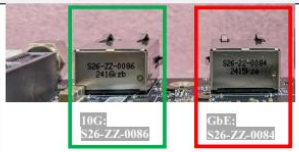 Front View in box PC 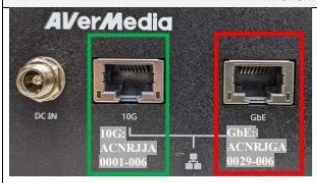

2.14 Micro SIM Card Socket

Function	Micro SIM Card	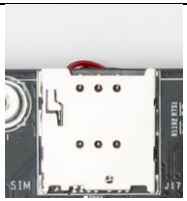
Location	J17	
Type Description	SOCKET_MICRO SIM_8PIN_90°_SMD	
Manufacturer and Part Number	福軒 Fullglory FG-0271AAAG06A PUSH PUSH 1.42H	
Pinout	Refer to Micro SIM card standard	
Remark	*Push Push type *Inserting directing as below	

2.15 M.2 B key 3042/3052

Function	M.2 B key	
Location	J61	
Type Description	SOCKET_M.2-KEY B_75PIN_90°_SMD	
Manufacturer and Part Number	鴻海_Foxconn 2E0BC21-S85BB-7H_H8.5 ㎜	
Mating Connector	Any M.2 B key card standard interface device.	
Pinout	Please refer to M.2 B key card standard for the pinout details.	
Remarks	None	

2.16 OOB board connector

Function	Connector of OOB board
Location	J62/J26
Type Description	J62/ WAFER_1*10PIN_1 ㎜_180°_SMD J26/WAFER_1*2PIN_1 ㎜_180°_SMD
Manufacturer and Part Number	J62/ 宏致_50228-01071-001_WTB-BLACK J26/宏致 ACES 50228-00271-001_WTB
Mating Connector	J62/ AMA:1002-10Y-HF/BOOM:1.0T-1-10P HF J26/宏致 ACES 50233-002H0H0-001
Pinout	

J62	Description
PIN1	GND
PIN2	N.C.
PIN3	UART3_RXD_OOB
PIN4	UART3_TXD_OOB
PIN5	UART1_RXD_OOB
PIN6	UART1_TXD_OOB
PIN7	+5V_SYSTEM_PG
PIN8	RST_OOB
PIN9	/POWER_BTN
PIN10	+5V_MINI_A

J26	Description
PIN1	/POWER_BTN
PIN2	GND

Remarks	None

2.17 DC POWER JACK

Function	DC Power input with lock
Location	J30
Type Description	JACK_DC POWER_D2.5 ㎜_90°_DIP include nut and washer
Manufacturer and Part Number	京政 JKCR DCD-020-105B
Mating Connector	伸銘 SMCTS OD 5.5*2.5 mm DC 10mm (655-236)
Pinout	
Remarks	NA

Pin Number	Description
Center	Power
Outer ring	GND

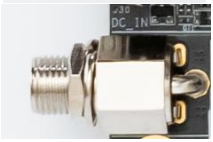

2.18 ATX 4P

Function	ATX 4P
Location	J31
Type Description	WAFER_2*2PIN_4.2 ㎜_90°_DIP
Manufacturer and Part Number	福軒 Fullglory FPWD-42R2-04NAT
Mating Connector	Follow ATX 4pin power standard
Pinout	
Remarks	None

Pin Number	Description
1	GND
2	GND
3	12-54V Power
4	12-54V Power

2.19 USB 2.0 Gen 1 Type-A Connector #1 , #2

Function	USB 2.0 Gen 1 Type-A connector #1 #2	
Location	J33	
Type Description	Dual-port USB 2.0 Gen 1 Type-A female connector	
Manufacturer and Part Number	捷湧 EDL UAF208D010B	
Mating Connector	Any USB 2.0 standard Type-A interface cable or device.	
Pinout	Please refer to USB 2.0 Gen 1 standard.	
Remarks	None	

2.20 12V power connector for daughter board

Function	12V power output connector	
Location	J37	
Type Description	WAFER_1*5PIN_2 ㎜_180°_SMD	
Manufacturer and Part Number	宏致 ACES 50310-0057N-001_WTB HEADER-H6.5mm	
Mating Connector	宏致 ACES 50389-005H0H0-001	
Pinout		
Remarks	None	

Pin Number	Description
1	+12V Power
2	+12V Power
3	GND
4	GND
5	NC

2.21 PCIE x16 socket

Function	PCIE x16 socket	
Location	J5,J6	
Type Description	SOCKET_PCIE_164PIN_180°_SMD	
Manufacturer and Part Number	鴻海 Foxconn 2EF5823-DA9D0-8F	
Mating Connector	Please refer to PCIE card standard	
Pinout	Please refer to PCIE card standard	
Remarks	None	

2.22 Board to board connector (to Camera board)

Function	Board to board connector	
Location	J60	
Type Description	WAFER_2*60PIN_0.5 ㎜_180°_SMD	
Manufacturer and Part Number	SAMTEC QSH-060-01-L-D-A-K-TR BTB-RECEPTACLE	
Mating Connector	SAMTEC QTH-060-03-H-A-D BTB-PLUG QTH-060-04-H-A-D BTB-PLUG	
Pinout	Comply with NVIDIA Devkit pinout.	
Remarks	None	

2.23 CAN Bus 3-pin terminal block with transceiver

Function	CAN Bus 3-pin terminal block with transceiver	
Location	BJ3	
Type Description	TERMINAL BLOCK_1*3PIN	
Manufacturer and Part Number	進聯 DECA, ME030-38103T, GREEN-P3.81 ㎜	
Mating Connector	進聯 DECA, MC420-38103Z	
Pinout		3 2 1
Remarks	None	

Pin #	Description
1	CANH
2	GND
3	CANL

2.24 Debug port

Function	Debug port	
Location	JP8	
Type Description	HEADER_PIN_1*4PIN_2.54 ㎜_180°_SMD	
Manufacturer and Part Number	宏致 ACES 60240-00471-001	
Mating Connector	Any 2.54mm pitch standard interface female	
Pinout		
Remarks	None	

Pin #	Description
1	+3.3V Power
2	RX
3	TX
4	GND

2.25 Switch Button

Function	Switch Button	
Location	SW1	
Type Description	4 SPST DIP switch	
Manufacturer and Part Number	圜達 DIPTRONICS IN OFF-SWITCHING 0.025A/24VDC	
Pinout		
Remark	NA	

Pin #	Description
1	OFF=>Auto Power ON=>Button Power
2	OFF=>FAN PWM ON=>FAN Always
3	NC
4	OFF=>CAN W/O Terminal ON=>CAN W/ Terminal

2.26 Power &Recovery Button

Function	Power & Recovery control button	
Location	BSW1, BSW3	
Type Description	Button	
Manufacturer and Part Number	冠泰 Champway LS67AK-NBR-A-R2KA9 RGB-CAP(BLACK)	
Pinout	N/A	
Remark	None	

Other Switches and Jumpers

Other switches and jumpers listed on the boards but not mentioned in this manual are reserved for the internal use by AVerMedia. They are not open to the client application.

3.0 Installation

- **The input range is 12V~54V with a ±10% tolerance, it is actually 10.8V~59.4V**
- Check and ensure all the external system power supplies are turned off.
- Connect the power cord to CB/devkit/Box PC DC in jack or ATX 4pin
- Connect the Micro USB2.0 cable to CB/devkit/Box PC connector.
- Press and hold on the Recover button
- Plug in AC power

(Since the DCINJACK is slightly tight, be careful not to shake it when inserting the CB/devkit/Box PC)

3.1 BSP Setup Instructions

BSP (board support package) file: D315AO-R2.*.*.*.*.tar.gz for D315AO
If you want to get the BSP download link, Please contact with AVerMedia FAE.

Default login username/password of the BSP is nvidia/nvidia

If you have difficulties to access the BSP download link, please visit AVerMedia website at https://www.avermedia.com/professional/download, or contact technical support at https://www.avermedia.com/professional/technical_support or e-mail us at eusupport@avermedia.com for further assistance.

BSP Installation steps for NVIDIA Jetson board: (Important Note: Please backup your personal files before re-flashing BSP)
After you download the BSP file and put the file in a Linux PC, please refer to the steps below to re-flash BSP.

1. Let the JETSON AGX Orin initiate recovery mode.
You have to keep pressing “Recovery” button and then power on the NVIDIA Jetson board to initiate recovery mode.

When connecting a NVIDIA Jetson board to a Linux PC via a MicroUSB to USB cable, you can check kernel messages with `dmesg` command in the Linux PC.
Once you see the similar messages as below, it means that the NVIDIA Jetson board is in the recovery mode.
[24685.229129] usb 1-7: Product: APX
[24685.229132] usb 1-7: Manufacturer: NVIDIA Corp

2. Using the commands below in the Linux PC to start re-flashing BSP.

 # sudo is required to extract BSP

$ sudo tar zxvf D315AO-R2.*.*.*.*.tar.gz

$ cd JetPack_*.**/Linux_for_Tegra

$ ./install.sh

4.0 Software

This section describes BSP's features for D315AO

1. Support optional M.2 WI-FI/Bluetooth modules (Intel® Wireless-AX210), the manager UI of AX210 WiFi/Bluetooth is located on the upper-right corner of Ubuntu desktop. It can be also controlled by nmcli/bluetoothctl in command line.

2. Power Mode

   Power mode can be modified by the UI on the upper-right corner of Ubuntu or the following commands.

```
# get current power mode
$ sudo nvpmodel -q
# setup power mode
# where <x> is power mode number, please refer to
https://docs.nvidia.com/jetson/archives/r35.1/DeveloperGuide/text/SD/PlatformPowerAndPerformance/JetsonOrinNxSeriesAndJetsonAgxOrinSeries.html?highlight=nvpmodel#supported-modes-and-power-efficiency for more information
$ sudo nvpmodel -m <x>
```

   * Current default power mode:

   D315AO: MODE 30W (2)

3. RTC Battery

   The following command can get RTC battery voltage.

```
$ sudo avt_tool -a | grep -oP "AIN5.*\[\K[^\]]*"
```

4. Fan Speed

   The following commands can get PWM fan information.

```
# get current speed setting of PWM Fan (0 ~ 255)
$ cat /sys/devices/platform/pwm-fan/hwmon/hwmon3/pwm1

# get Fan RPM value
```

```
$ cat /sys/devices/platform/39c0000.tachometer/hwmon/hwmon1/rpm
```

5. CAN Bus

(1) Enable and setup CAN Bus

```
# 1. Enable CAN Bus
$ sudo modprobe can
$ sudo modprobe can-raw
$ sudo modprobe mttcan

# 2. Setup CAN Bus
$ sudo ip link set can0 type can bitrate 500000 dbitrate 2000000 berr-reporting on
fd on restart-ms 100
$ sudo ip link set can0 up
```

(2) Receive and Send

```
# Receive
$ candump can0

# Send
$ cansend can0 <can_frame>
```

* where:

<can_frame> is CAN Bus frame message, see `cansend --help` for more detail.

6. Camera

The camera support on D315AO are listing as below:

* ECON AR0230 (120p serdes camera)

Test Command:

```
> ECON eCAM20 (ar0230):
    No   width   height  framerate
    0    640    480        60/45
    1    960    540        58/30
    2  1280      720         45
     3 1280      960         34
     4 1920     1080         30

    $ gst-launch-1.0 -e v4l2src device=/dev/video0 do-timestamp=true ! 'video/x-raw,width=640,height=480,framerate=60/1,format=UYVY' ! fpsdisplaysink video-sink=xvimagesink sync=false
    $ gst-launch-1.0 -e v4l2src device=/dev/video0 do-timestamp=true ! 'video/x-raw,width=960,height=540,framerate=58/1,format=UYVY' ! fpsdisplaysink video-sink=xvimagesink sync=false
    $ gst-launch-1.0 -e v4l2src device=/dev/video0 do-timestamp=true ! 'video/x-raw,width=1280,height=720,framerate=45/1,format=UYVY' ! fpsdisplaysink video-sink=xvimagesink sync=false
    $ gst-launch-1.0 -e v4l2src device=/dev/video0 do-timestamp=true ! 'video/x-raw,width=1280,height=960,framerate=34/1,format=UYVY' ! fpsdisplaysink video-sink=xvimagesink sync=false
    $ gst-launch-1.0 -e v4l2src device=/dev/video0 do-timestamp=true ! 'video/x-raw,width=1920,height=1080,framerate=30/1,format=UYVY' ! fpsdisplaysink video-sink=xvimagesink sync=false
```

7. GPIO usage

(1) Output: (e.g. gpio483)

```
$ sudo su
$ gpio_id=483
$ echo $gpio_id > /sys/class/gpio/export
$ cat /sys/kerne/debug/gpio | grep 483
gpio-483 (PZ.05                    )

$ gpio_index=PZ.05
$ echo out > /sys/class/gpio/$gpio_index/direction
$ echo 1 > /sys/class/gpio/$gpio_index /value     # HIGH
$ echo 0 > /sys/class/gpio/$gpio_index /value     # LOW
```

(2) Input

```
$ sudo su
$ gpio_id=483
$ echo $gpio_id > /sys/class/gpio/export
$ cat /sys/kerne/debug/gpio | grep 483
gpio-483 (PZ.05                    )

$ gpio_index=PZ.05
$ echo in > /sys/class/gpio/$gpio_index /direction
$ cat /sys/class/gpio/$gpio_index /value       # 1: HIGH,   0: LOW
```

(3) Disable

```
$ sudo su
$ gpio_id=483
$ echo $gpio_id >/sys/class/gpio/unexport
```

For L4T (Linux for Tegra) BSP support and the other software support associated with NVIDIA® Jetson AGX Orin & AGX Orin Industrial , please visit AVerMedia website to contact our technical support function. (https://www.avermedia.com/tw/support/contact)

5.0 Force Recovery Mode

MicroUSB Jetson platform port of D315-2 can be used to re-program NVIDIA® Jetson AGX Orin & AGX Orin Industrial by using the other host system running NVIDIA Jetpack, as the procedure described below.

1. Before you start
   - Please make sure to use a Linux host PC with Ubuntu 18.04 or 20.04 operating system.
   - Please use a native setup (no virtual machine) installation file in the following steps.
   - You will also need a high-quality standard USB. Type A to micro-USB cable
   - Download installation file from Avermedia.
2. Connect carrier board to host PC
3. Connect the system to the Linux host PC. Please use a USB cable (micro-USB on the carrier board).
4. After connecting to the host PC powering up the system. The system will detect the host PC and automatically enter the flashing state (also called force recovery mode).
5. Check that the connection is established with the lsusb command. You should find one entry with Nvidia Corp. as highlighted below.
6. Flashing of system
   - Use the flash cmd script in the extracted bootloader folder to transfer the software into the Jetson compute module and flash it.
   - Please connect a monitor to the system. After the flashing process has completed the should automatically boot and show the Ubuntu desktop.
   - You now have a functioning system ready for your needs.

6.0 Power Consumption

Item Description	Power Consumption
Theoretical Maximum System Power Consumption	● Power Consumption of D315AOB-32G: 15W(*1) to 56W (*2) ● Power Consumption of D315AOB-64G: 15W(*1) to 66W (*2) ● Power Consumption of D315AOB-Industrial: 17W(*1) to 76W (*2) ● Power Consumption of D315AOP-32G: 12W(*1) to 53W (*2) ● Power Consumption of D315AOP-64G: 12W(*1) to 63W (*2) ● Power Consumption of D315AOP-Industrial: 14W(*1) to 73W (*2) *1: The condition is Normal Mode and connected to USB3*2/ USB2*2/ Ethernet*1(10G)/ Micro SD Card*1 *2: The condition is Full Loading Mode and connected USB3*2/ USB2*2)/ Ethernet*1(10G)/ Micro SD Card*1/ SSD(256G)*1/ WIFI (Intel AC9260)*1/ PCIe to SSD Adapter(500G)*1/ 4G(EM05-G)*1
Typical System Power Consumption	The power consumption under the normal operating mode is depending on the application software running with NVIDIA® Jetson AGX Orin and AGX Orin Industrial.

7.0 Accessory Drawings

7.1 Fan Module/ Adapter/ Power Cord (Original)

Fan Module for AGX Orin and AGX Orin Industrial

- Rated Voltage: 12V
- Operating Voltage Range: 11.4V~12.6V
- Rated Speed: 4200±10% RPM
  (Testing Speed After Continuous 3Minute Operation At Ambient Temperature Of 25 ℃)
- Life Expectancy: 50,000hours at 40℃ (5 TO 90% RH)
- Bearing Type: Two Ball

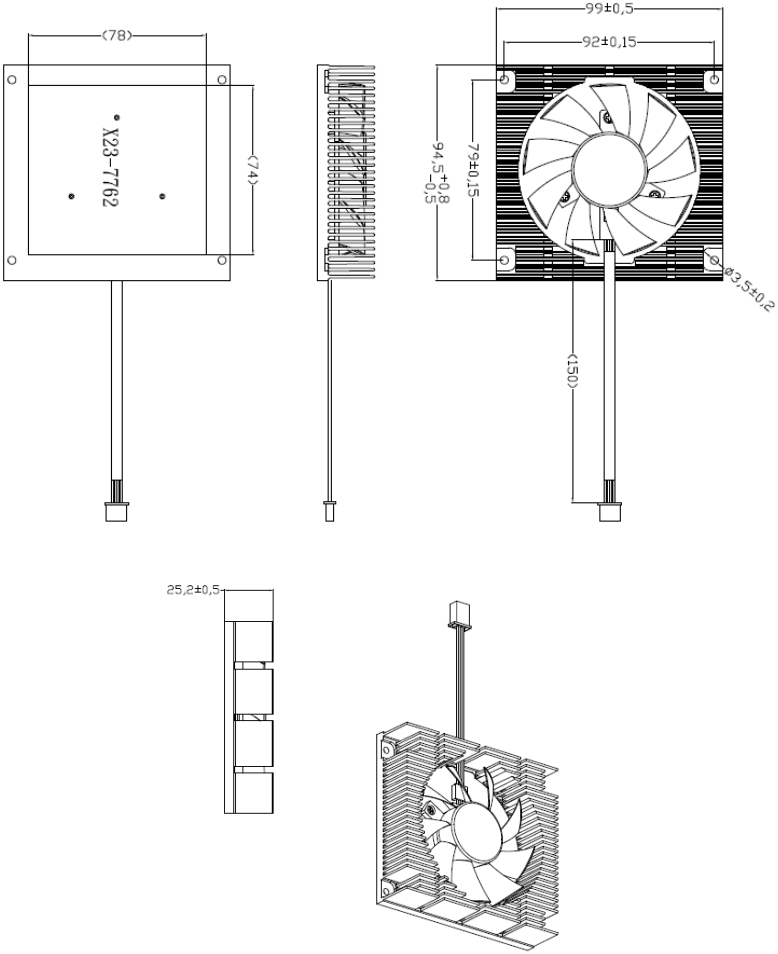

Fan Module/ Adapter/ Power Cord (PCN20230906-1)

Fan Module for AGX Orin

- Rated Voltage: 12V
- Operating Voltage Range: 11.4V~12.6V
- Rated Speed: 4200±10% RPM
  (Testing Speed After Continuous 3Minute Operation At Ambient Temperature Of 25 ℃)
- Life Expectancy: 50,000hours at 40℃ (5 TO 90% RH)
- Bearing Type: Two Ball

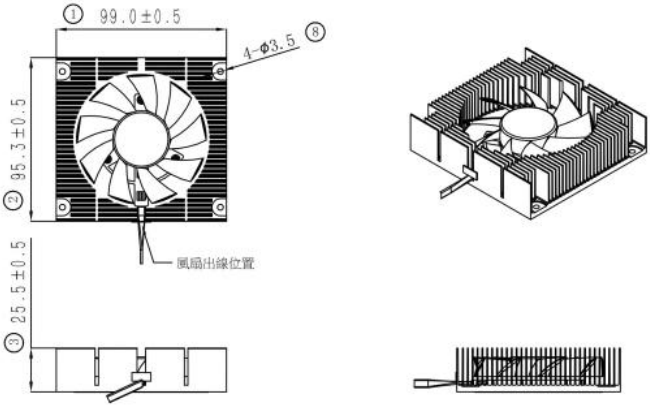

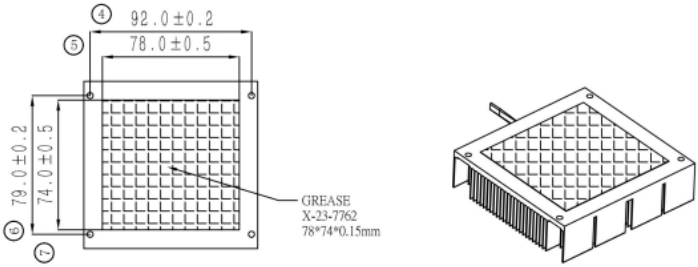

Table1:

1st source thermal module	Vendor A 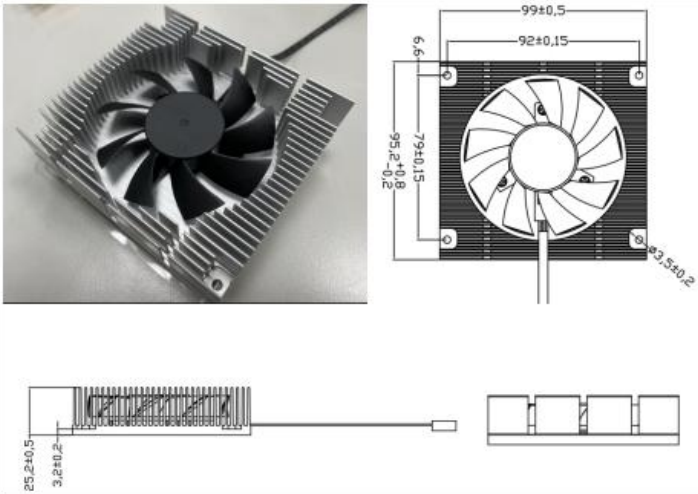
2nd source thermal module	Vendor B 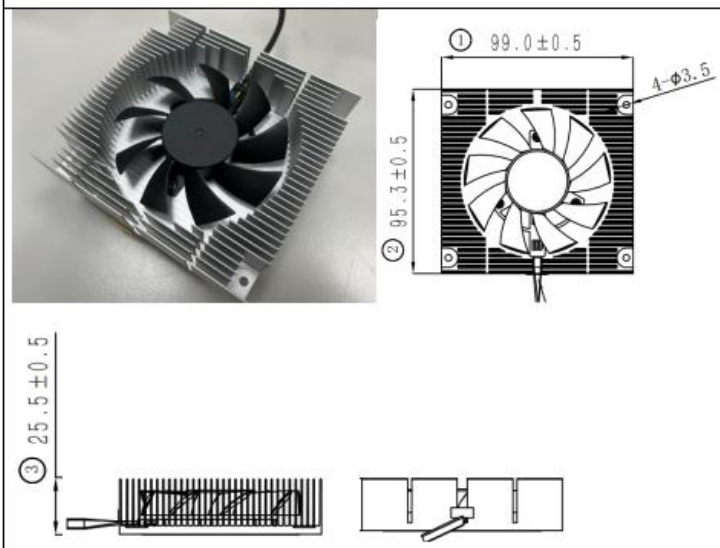

Power Adapter 041318GOUANL

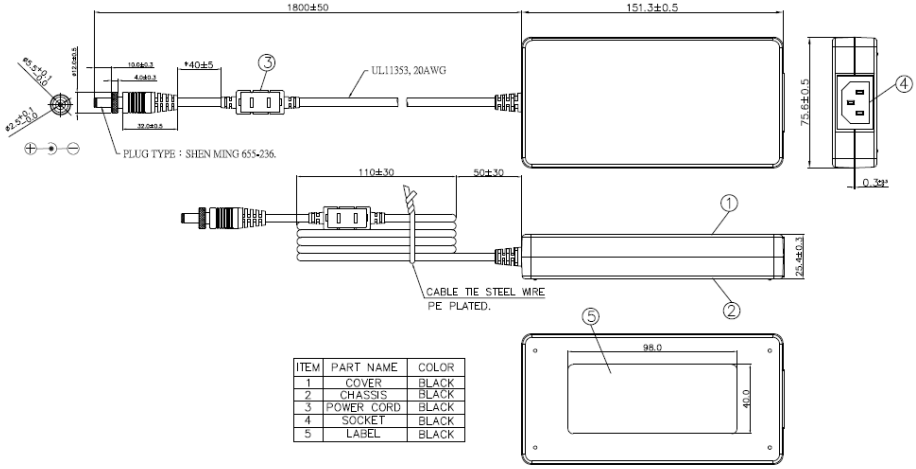

ITEM	PART NAME	COLOR
1	COVER	BLACK
2	CHASSIS	BLACK
3	POWER CORD	BLACK
4	SOCKET	BLACK
5	LABEL	BLACK

64APOWERBRX-IPD (TW version)

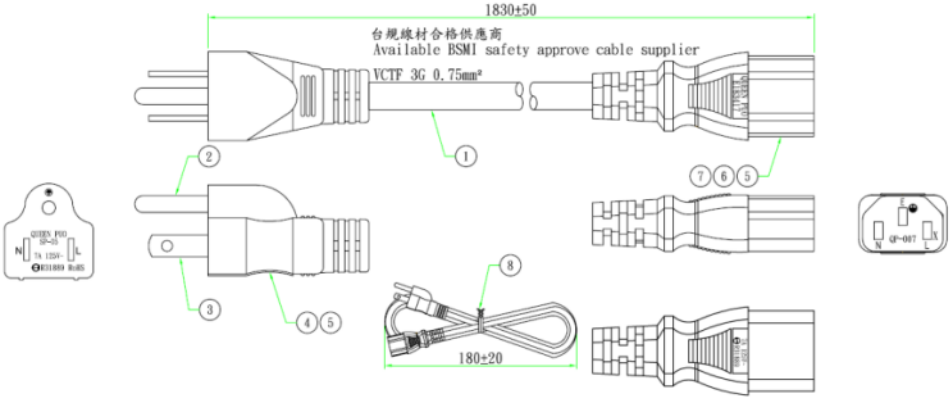

064APOWERBR2-IPD (US version)

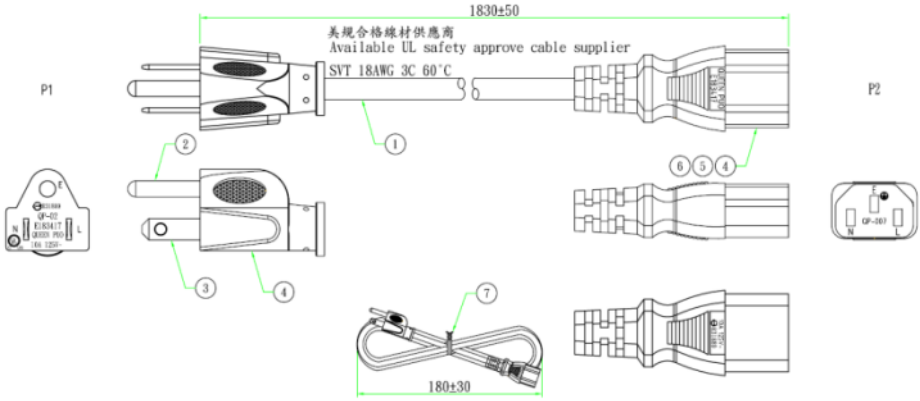

064APOWERBRW-IPD (UK version)

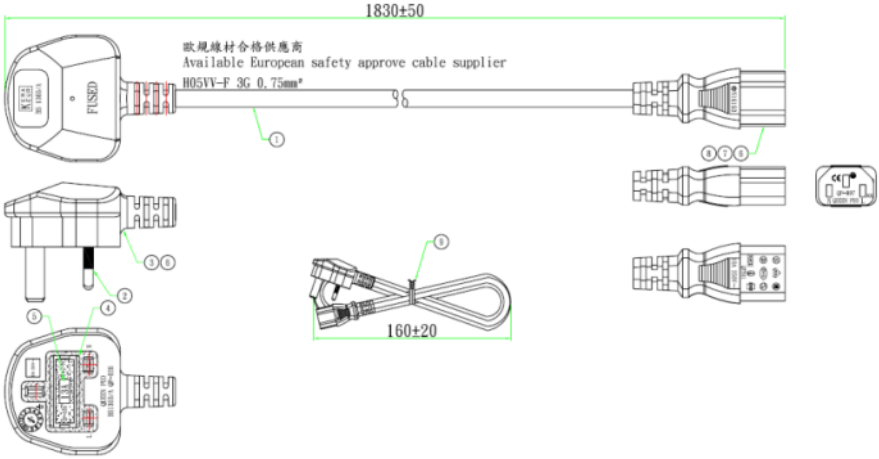

064APOWERBR5-IPD (EU version)

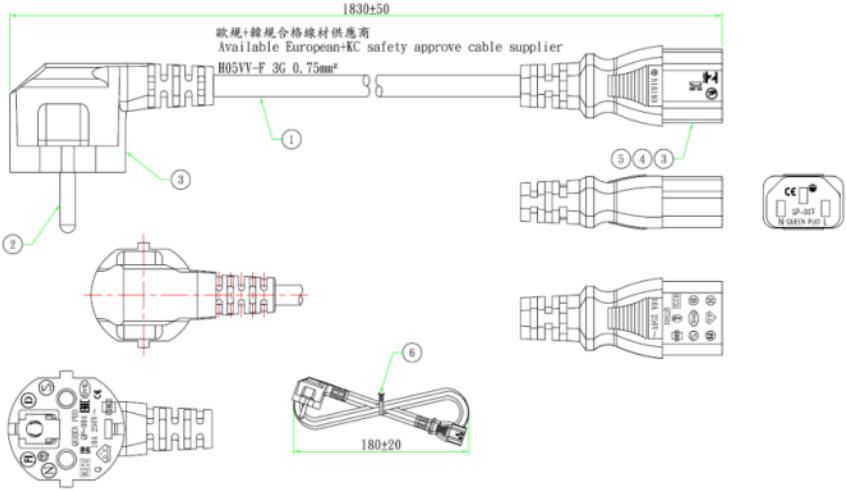

064APOWERBSL (JP version)

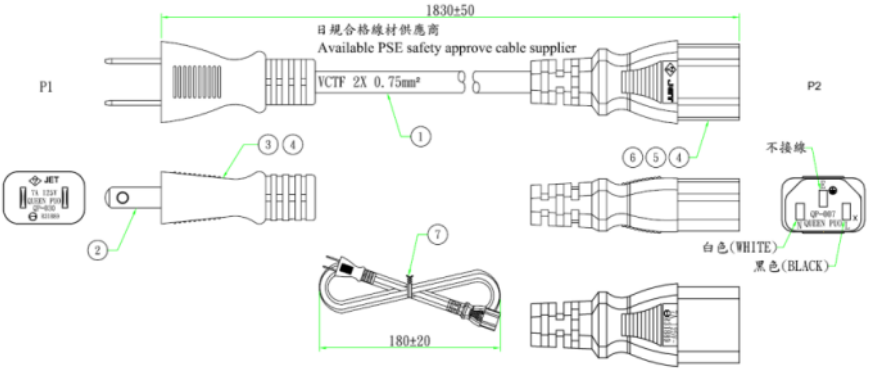

064APOWERBR4-IPD (CN version)

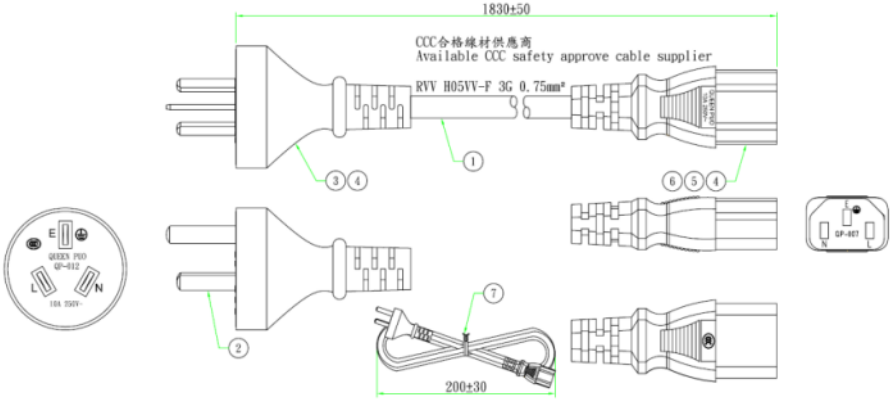

8.0 D315AOP (2D Drawing)

D315AOP (2D Drawing)

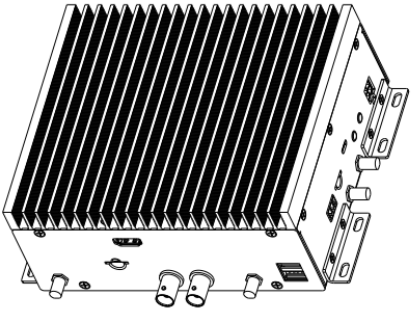

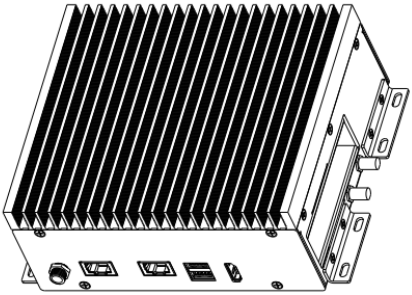

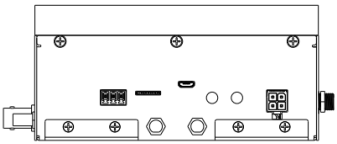

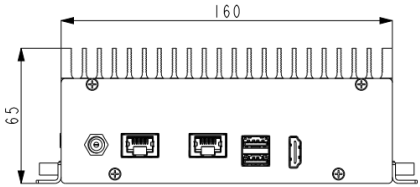

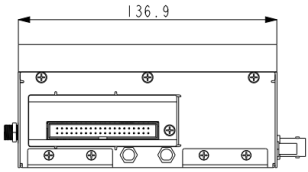

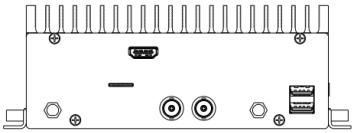

D315AOP (2D Drawing)

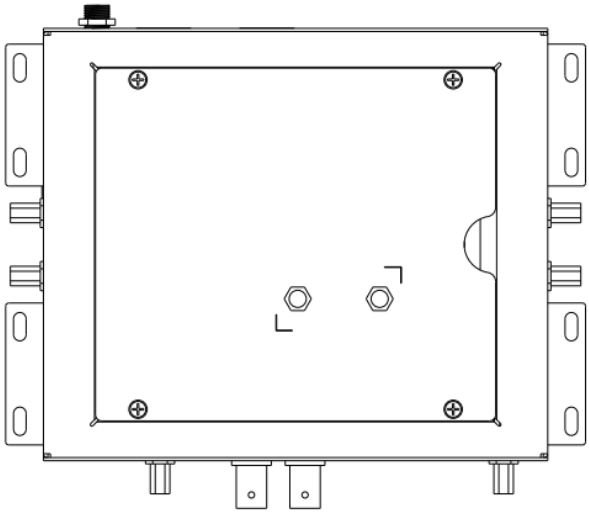

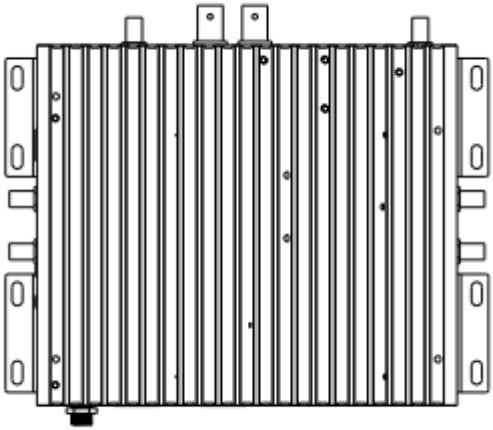

9.0 Thermal Pad for 10G IC
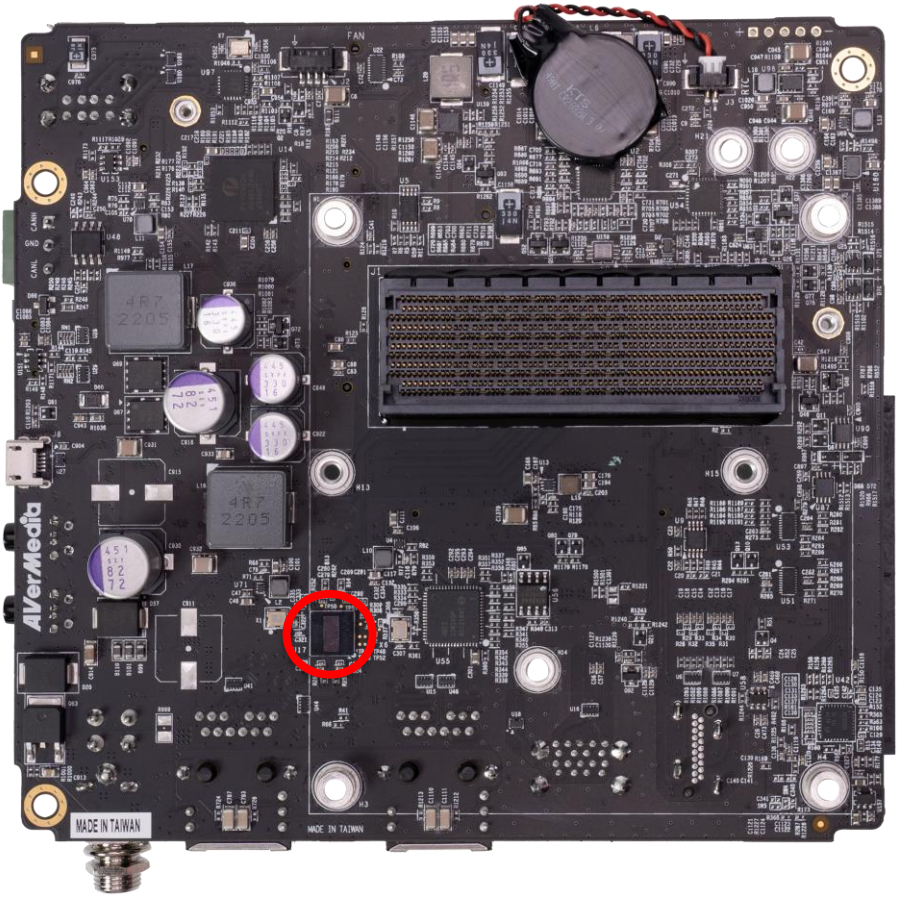
If there is a need for using 10G, a Thermal Pad can be applied to the 10G IC area. (As the red circle below)